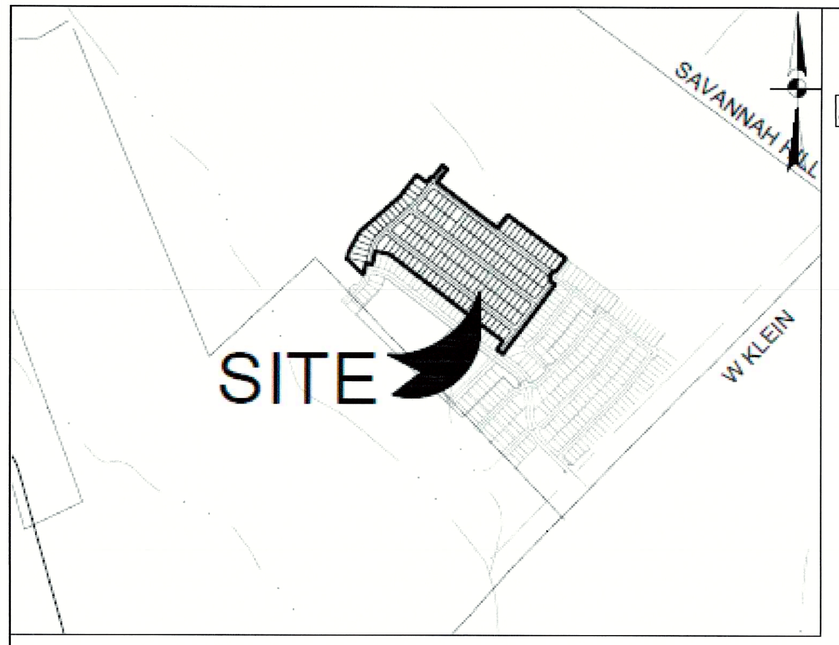


## VICINITY MAP

NOT TO SCALE

**WO# 1938928**
**118 LOTS**
**21 LIGHTS**

50' 0 50' 100' 150' 200'
GRAPHIC SCALE

**Upline Device**
**MA201**
**14.4/24.9 kV**

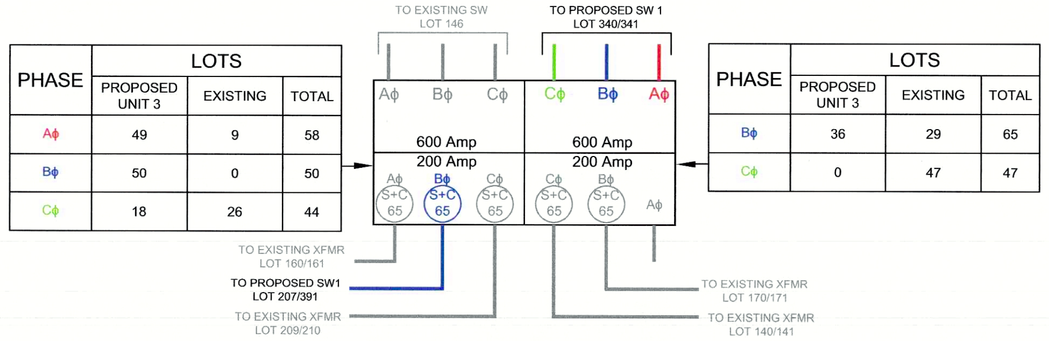


| PHASE | LOTS | | |
|---|---|---|---|
| | PROPOSED UNIT 3 | EXISTING | TOTAL |
| Aϕ | 49 | 9 | 58 |
| Bϕ | 50 | 0 | 50 |
| Cϕ | 18 | 26 | 44 |

| PHASE | LOTS | | |
|---|---|---|---|
| | PROPOSED UNIT 3 | EXISTING | TOTAL |
| Bϕ | 36 | 29 | 65 |
| Cϕ | 0 | 47 | 47 |

**DETAIL 5: EXISTING SWGR 2 (PME-9)**
EXISTING SWITCHGEAR LAYOUT

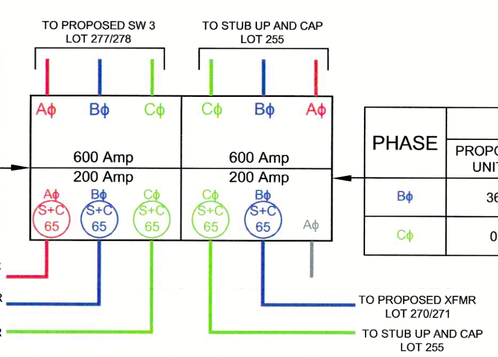


| PHASE | LOTS | | |
|---|---|---|---|
| | PROPOSED UNIT 3 | EXISTING | TOTAL |
| Aϕ | 49 | 9 | 58 |
| Bϕ | 50 | 0 | 50 |
| Cϕ | 18 | 26 | 44 |

| PHASE | LOTS | | |
|---|---|---|---|
| | PROPOSED UNIT 3 | FUTURE | TOTAL |
| Bϕ | 36 | 29 | 65 |
| Cϕ | 0 | 65 | 65 |

**DETAIL 4: PROPOSED SWGR 1 (PME-9)**
PROPOSED SWITCHGEAR LAYOUT

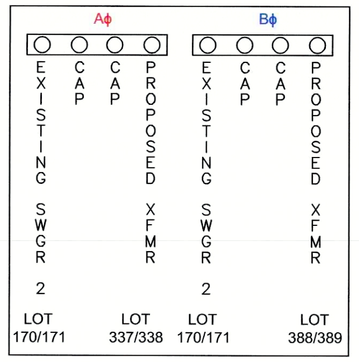


**DETAIL 1: PROPOSED SW 1**
PROPOSED 2ϕ (Aϕ, Bϕ) SWITCH CABINET

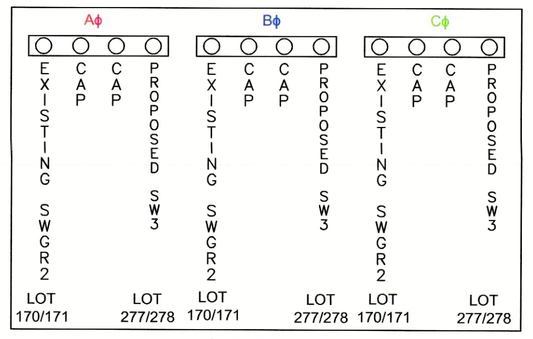


**DETAIL 2: PROPOSED SW 2**
PROPOSED 3ϕ 600 AMP SWITCH CABINET

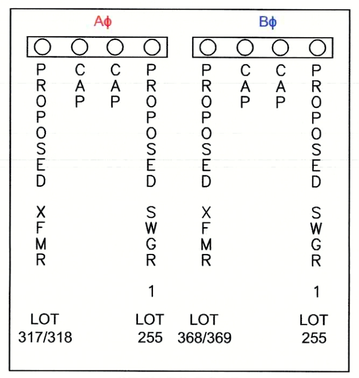


**DETAIL 6: PROPOSED SW 4**
PROPOSED 2ϕ (Aϕ, Bϕ) SWITCH CABINET

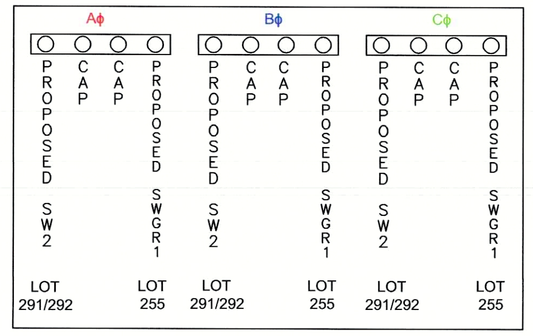


**DETAIL 3: PROPOSED SW 3**
PROPOSED 3ϕ 600 AMP SWITCH CABINET

## Material List Table

| Quantity | CU | Description |
|---|---|---|
| 8,269 | U1/0AL25KV | 1/0 AL 25KV Aluminum URD Primary Cable |
| 7,213 | U1000AL25KV | 1000 MCM Aluminum URD Primary Cable |
| 1,530 | U12/2UFW/GRD | 12/2 UF Copper with Ground Street light Cable |
| 6,675 | U350ALTP | 350 MCM URD Triplex Secondary Cable |
| 113 | U4/0ALTP | 4/0 MCM URD Triplex Secondary Cable |
| 56 | UK6-350 | Secondary pedestal, fed with 350 MCM URD triplex |
| 1 | UK6-4/0 | Secondary pedestal, fed with 4/0 MCM URD triplex |
| 1 | UM3E-3-9 | Three phase 600 Amp dead front switchgear with 2 source and 2-200Amp load compartments |
| 21 | UP30-5AL | 30 ft. aluminum street light pole with one 54 watt type 3 LED luminaire |
| 875 | UPVC 1 | 1" Schedule 40 PVC |
| 19,743 | UPVC 2.5 | 2.5" Schedule 40 PVC |
| 5,518 | UPVC 4 | 4" Schedule 40 PVC |
| 3 | UVG5-2D-100 | 100 kVA DV/120-240 Pad-Mounted Transformer, Open |
| 11 | UVG7-2D-100 | 100 kVA DV/120-240 Pad-Mounted Transformer, Loop |
| 1 | UVG7-2D-50 | 50 kVA DV/120-240 Pad-Mounted Transformer, Loop |
| 7 | UVG7-2D-75 | 75 kVA DV/120-240 Pad-Mounted Transformer, Loop |
| 2 | UVM32-2 | 2 Phase switch cabinet, 2-Way |
| 2 | UVM33-2-600 | 3 Phase switch cabinet, 2-Way, 600 Amp |

## LEGEND:

- PROPOSED POLE
- PROPOSED POLE WITH RISER(S)
- EXISTING POLE
- STREET LIGHT
- SINGLE PHASE PAD MOUNT TRANSFORMER
- THREE PHASE PAD MOUNT TRANSFORMER
- SINGLE PHASE POLE MOUNT TRANSFORMER (NOT INCLUDED IN PROJECT SCOPE)
- SECONDARY PEDESTAL
- OPEN POINT
- SWITCH
- SWITCHGEAR
- PULL BOX
- WATER METERS
- A — A-PHASE PRIMARY UNDERGROUND - 1/0 AL 25kV IN (1) 2½" PVC CONDUIT
- B — B-PHASE PRIMARY UNDERGROUND - 1/0 AL 25kV IN (1) 2½" PVC CONDUIT
- C — C-PHASE PRIMARY UNDERGROUND - 1/0 AL 25kV IN (1) 2½" PVC CONDUIT
- 1000 — PRIMARY UNDERGROUND - 3-PHASE 1000 MCM AL 25kV IN (3) 4" PVC CONDUIT WITH (1) 2½" PVC CONDUIT FOR FIBER
- 350 — SECONDARY UNDERGROUND - 350 TPLX IN (1) 2½" PVC CONDUIT WITH (1) 2½" SPARE CONDUIT
- 4/0 — SECONDARY UNDERGROUND - 4/0 TPLX IN (1) 2½" PVC CONDUIT
- #2 — SECONDARY UNDERGROUND - #2 TPLX IN (1) 2½" PVC CONDUIT
- 12/2 — SECONDARY STREETLIGHT CIRCUIT - 12/2 W/GND IN (1) 1" PVC CONDUIT
- FUTURE SERVICE STUB-OUT (CONDUIT ONLY)
- PROPOSED WATER LINES (BY OTHERS)

## GENERAL NOTES:

1. FOR FUTURE TEMPORARY SERVICE, STUB OUT (1) 2" FLEXIBLE ELECTRICAL PVC CONDUIT 6" BELOW GRADE CENTERED IN FRONT OF ALL TRANSFORMERS AND PEDESTALS. WHEN TEMPORARY SERVICE IS RETIRED, CUT OFF AND CAP 6" BELOW FINISHED GRADE.
2. VERIFY ALL UNDERGROUND UTILITIES BEFORE DIGGING.
3. ZACH HAUPERT WILL NOTIFY CONSTRUCTION CREWS WHEN IT IS OK TO PROCEED WITH INSTALLATION OF THE UNDERGROUND SYSTEM.
4. GVEC TO HAVE A 5' WIDE ELECTRIC EASEMENT ON ALL ROAD CROSSINGS IN WHICH ELECTRIC LINES ARE PLACED.
5. INSTALL THE CORRECT kV RATED PARKING STAND ARRESTORS AND LIGHTNING ARRESTORS FOR ALL OPEN POINT TRANSFORMERS.
6. WATER/SEWER PROVIDED BY G.V.S.U.D
7. WATER/SEWER PROVIDED BY G.B.R.A

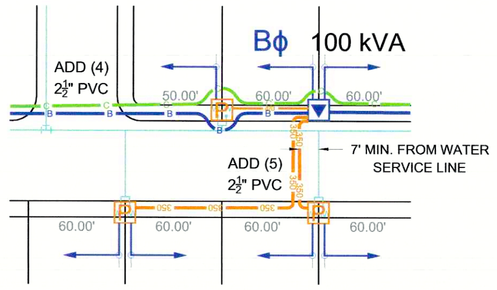


**ROAD CROSSING DETAIL - REQUIRED CLEARANCE FROM WATER MAIN AND SERVICE LINES**

ALL ELECTRIC CONDUITS PARALLEL WITH WATER MAIN OR SERVICE LINES TO HAVE SEVEN FOOT (7') HORIZONTAL CLEARANCE.

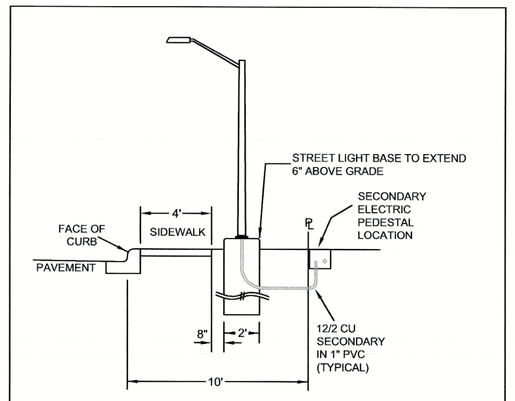


**STREET LIGHT NOTE:**
USE FLUSH-MOUNT PEDESTALS.

| DATE | # | BY | REVISION |
|---|---|---|---|
| 08/15/23 | 1 | LPF | Removed 1 phase switch, replaced with 2 phase switch. Added 2 phase switch (sw4). Moved open points. Added/moved street lights. Confirmed material counts. |

NOTE: G.V.E.C. WILL MAINTAIN 5' EASEMENT FOR SERVICE ENTRANCE TO DWELLING. THIS EASEMENT WILL VARY DEPENDING UPON LOCATION OF DWELLING.

G.V.E.C. SHALL HAVE ACCESS TO THE METER LOCATIONS FROM THE FRONT YARDS WITH THE METER LOCATIONS NOT BEING LOCATED WITHIN A FENCED AREA.

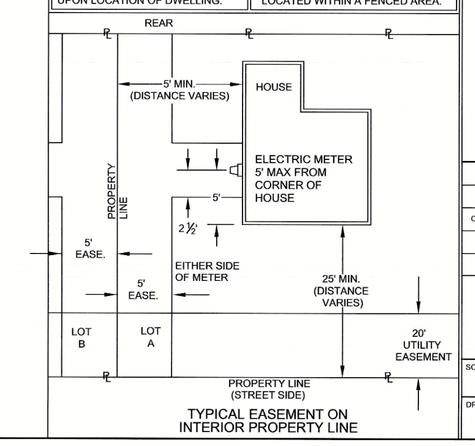


TYPICAL EASEMENT ON INTERIOR PROPERTY LINE

McCord Engineering Inc. — STATE OF TEXAS — REX N. WOODS — 87089 — LICENSED PROFESSIONAL ENGINEER
9-13-2023
F-2664

THE SEAL APPEARING ON THIS DOCUMENT WAS AUTHORIZED BY REX N. WOODS, P.E. 87089 September 13th, 2023 NOT VALID UNLESS SIGNED. ALTERATION OF A SEALED DOCUMENT WITHOUT PROPER NOTIFICATION TO THE RESPONSIBLE ENGINEER IS AN OFFENSE UNDER THE TEXAS ENGINEERING PRACTICE ACT.

**APPROVED FOR CONSTRUCTION**


gvec Delivering more.™
GUADALUPE VALLEY ELECTRIC CO-OP., INC.
P.O. BOX 118 - 825 E. SARAH DeWITT DR.
GONZALES, TEXAS 78629-0118
830-672-2871
1800-223-GVEC(4832)
FAX 210-672-9841
e-mail info@gvec.org


| | | | |
|---|---|---|---|
| DATE | 09/13/2023 | JOB NAME | KRAFT TRACT UNIT 3 |
| DRAWN BY | LPF | | |
| CHECKED BY | | | |
| DATE | 09/13/2023 | WORK ORDER # | |
| SCALE | 1" = 100' | | WO# 1938928 |


McCORD ENGINEERING, INC.
Texas Registered Engineering Firm F-2664
916 Southwest Parkway East
College Station, TX 77840
(979) 764-8356


| SCALE: | DATE: | DWG NO. | SHEET NO. |
|---|---|---|---|
| 1" = 100' | 09/13/2023 | MEI-17176 | 1 OF 1 |
| DRAWN BY: LPF | JOB CODE: GVC-3-K.6 | | REV. 0 |