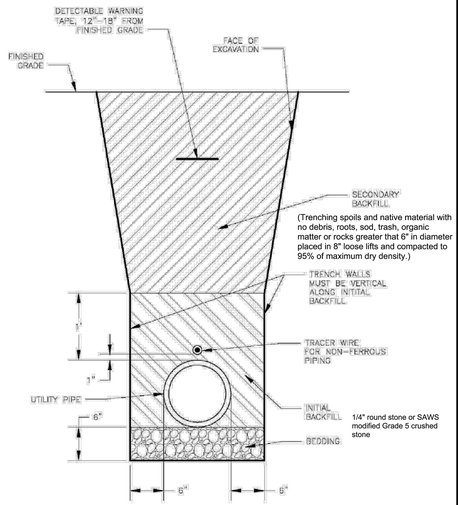

NOTE:
THIS DETAIL APPLIES TO DOMESTIC AND RECYCLED WATER MAINS, LOW-PRESSURE SEWER MAINS AND FORCE MAINS.

TRENCH DETAIL

NOT-TO-SCALE

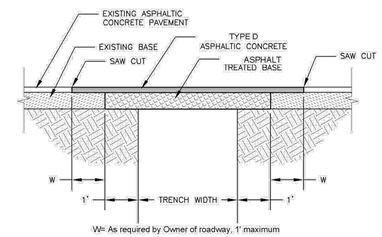

NOTE: Match Thickness of existing pavement

NOTE:
THIS DETAIL APPLIES TO DOMESTIC AND RECYCLED WATER MAINS.

PAVEMENT REPAIR DETAIL

NOT-TO-SCALE

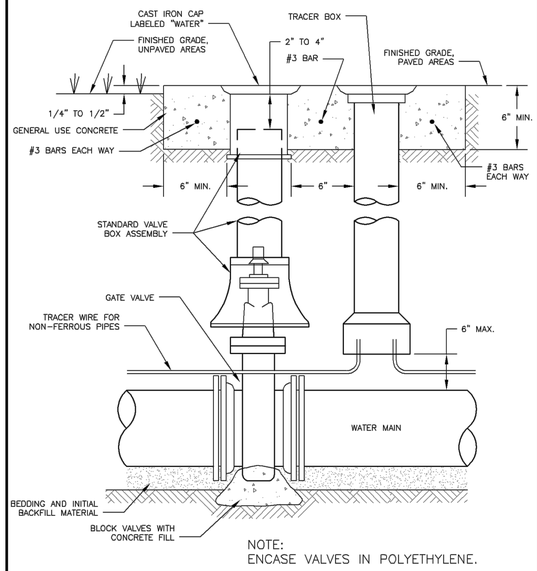

NOTE:
ENCASE VALVES IN POLYETHYLENE.

NOTE:
THIS DETAIL APPLIES TO DOMESTIC AND RECYCLED WATER MAINS.

WATER GATE VALVE AND VALVE BOX DETAIL

NOT-TO-SCALE

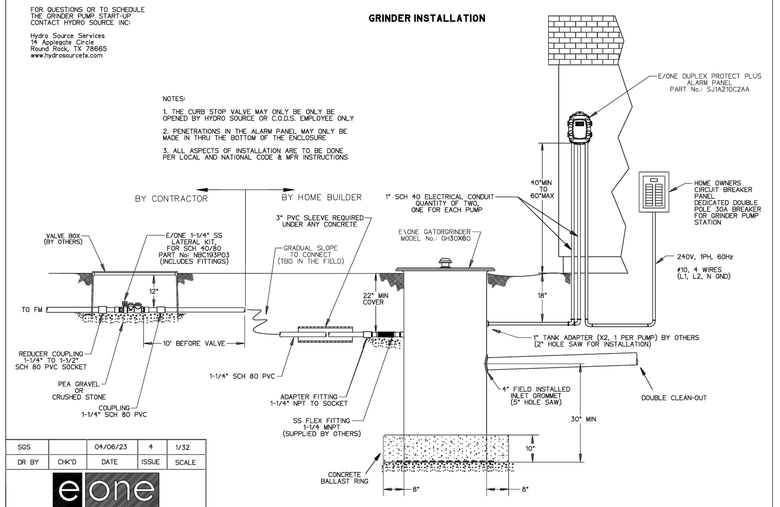

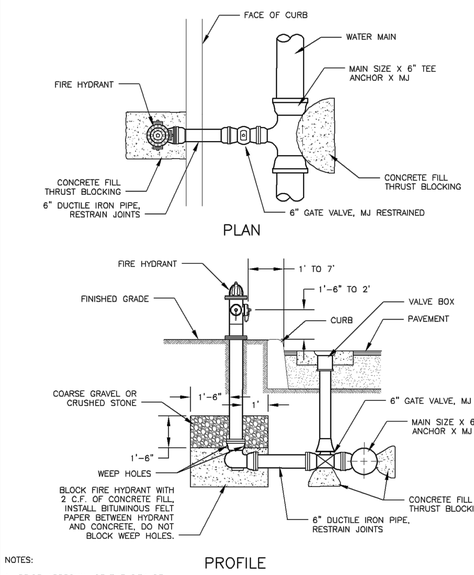

NOTES:

1. PRIOR APPROVAL OF THE CITY OF BOERNE REQUIRED TO USE THIS DETAIL.
2. POLY WRAP ALL DUCTILE IRON BELOW GRADE.
3. RESTRAIN ALL JOINTS.

FIRE HYDRANT ASSEMBLY DETAIL

NOT-TO-SCALE

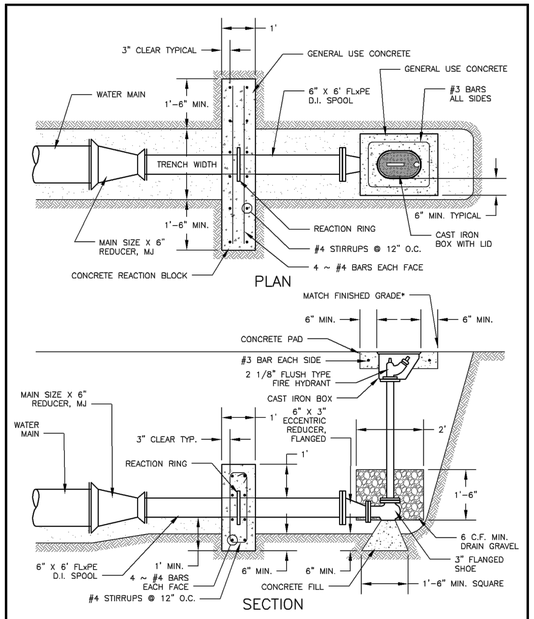

*MATCH FLUSH IN PAVED AREAS. SET BOX AND CONCRETE 1" ±1/2" ABOVE FINISHED GRADE IN UNPAVED AREAS.

NOTE:
THIS DETAIL APPLIES TO DOMESTIC AND RECYCLED WATER MAINS.

BLOWOFF DETAIL

NOT-TO-SCALE

NO.	REVISION	DATE
1	REVISED UNIT NUMBERING	1/12/22
2	REVISED DETAILS	3/21/23
3	ADDED DETAIL	4/19/23

4/19/2023

STATE OF TEXAS
REBECCA ANN CARROLL
92666
LICENSED
PROFESSIONAL ENGINEER

PAPE-DAWSON ENGINEERS
SAN ANTONIO I AUSTIN I HOUSTON I FORT WORTH I DALLAS
2000 NW LOOP 410 I SAN ANTONIO, TX 78213 I 210.375.9000
TEXAS ENGINEERING FIRM #470 I TEXAS SURVEYING FIRM #10028800

MIRALOMAS GARDEN HOMES - UNIT 3

KENDALL COUNTY, TEXAS

UTILITY DETAILS
SHEET 1 OF 2

PLAT NO.
JOB NO. 12616-04
DATE APRIL 2023
DESIGNER AC
CHECKED DRAWN AC
SHEET C12.11

Date: Apr 19, 2023, 4:39pm User ID: achamberlin
File: P:\126\16\04\Design\Civil\C12.11 UTILITY DETAILS.dwg

THIS DOCUMENT HAS BEEN PRODUCED FROM MATERIAL THAT WAS STORED AND/OR TRANSMITTED ELECTRONICALLY AND MAY HAVE BEEN INADVERTENTLY ALTERED. RELY ONLY ON FINAL HARDCOPY MATERIALS BEARING THE CONSULTANT'S ORIGINAL SIGNATURE AND SEAL. AERIAL IMAGERY PROVIDED BY GOOGLE© UNLESS OTHERWISE NOTED. Imagery © 2016,CAPCOG,Digital Globe,Texas OrthoImagery Program, USDA Farm Service Agency.