SMILEY TRACT UNIT 1

SAN ANTONIO, TEXAS

CIVIL CONSTRUCTION PLANS

SHEET INDEX

Sheet Description	Sheet No.
COVER SHEET	C0.00
MASTER DRAINAGE PLAN	C1.00
DRAIN A STA. 1+00.00 TO 5+00.00	C1.01
DRAIN A STA. 5+00.00 TO 15+00.00	C1.02
DRAIN A STA. 15+00.00 TO 19+00.00	C1.03
DRAIN A STA. 19+00.00 TO 23+00.00	C1.04
DRAIN A STA. 23+00.00 TO END	C1.05
DRAIN B STA. 1+00.00 TO 5+00.00	C1.06
DRAIN B STA. 5+00.00 TO 9+00.00	C1.07
DRAIN B STA. 9+00.00 TO 13+00.00	C1.08
DRAIN B STA. 13+00.00 TO 17+00.00	C1.09
DRAIN B STA. 17+00.00 TO END	C1.10
DRAIN C STA. 1+00.00 TO 5+00.00	C1.11
DRAIN C STA. 5+00.00 TO END	C1.12
DRAIN D STA. 1+00.00 TO 4+00.00	C1.13
DRAIN D STA. 4+00.00 TO END	C1.14
DRAINAGE DETAILS	C1.15
DRAINAGE DETAILS	C1.16
DRAINAGE DETAILS	C1.17
DRAINAGE DETAILS	C1.18
DRAINAGE DETAILS	C1.19
DRAINAGE DETAILS	C1.20
RED SHINER RUN PLAN & PROFILE (STA. 10+00.00 TO END)	C2.00
WHITE BASS DRIVE PLAN & PROFILE (STA. 10+00.00 TO END)	C2.01
MARLIN POND PLAN & PROFILE (STA. 10+00.00 TO END)	C2.02
FISHING TRAIL PLAN & PROFILE (STA. 10+00.00 TO END)	C2.03
HUNTER'S POND TURN LANE PLAN	C2.04
STREET DETAILS	C2.10
STREET DETAILS	C2.11
STREET DETAILS	C2.12
OVERALL SIGNAGE PLAN	C3.00
SIGNAGE DETAILS SHEET 1 OF 3	C3.10
SIGNAGE DETAILS SHEET 2 OF 3	C3.11
SIGNAGE DETAILS SHEET 3 OF 3	C3.12
OVERALL WATER DISTRIBUTION PLAN	C4.00
WATER DISTRIBUTION PLAN DETAILS	C4.10
WATER DISTRIBUTION PLAN NOTES	C4.11
OVERALL SANITARY SEWER PLAN	C5.00
SEWER LINE A ~ STA. 1+00.00 TO 12+00.00	C5.01
SEWER LINE A ~ STA. 12+00.00 TO END	C5.02
SEWER LINE B ~ STA. 1+00.00 TO END	C5.03
SEWER LINE D ~ STA. 1+00.00 TO END	C5.04
SANITARY SEWER DETAILS	C5.10
SANITARY SEWER NOTES	C5.11
OVERALL UTILITY PLAN	C6.00
OVERALL GRADING PLAN	C7.00
STORM WATER POLLUTION PREVENTION PLAN	C8.00
STORM WATER POLLUTION PREVENTION PLAN DETAILS	C8.10

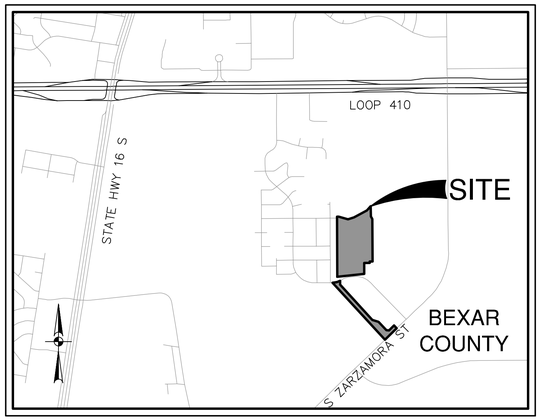

LOCATION MAP

NOT–TO–SCALE

PREPARED FOR:

EL RANCHO SONRISA, LLC
8626 JODHPUR
FAIR OAKS RANCH, TX 78015

AUGUST 2023

STATE OF TEXAS
JON D. ADAME
82567
LICENSED
PROFESSIONAL ENGINEER

10-5-23

PAPE-DAWSON ENGINEERS

SAN ANTONIO I AUSTIN I HOUSTON I FORT WORTH I DALLAS
2000 NW LOOP 410 I SAN ANTONIO, TX 78213 I 210.375.9000
TBPE FIRM REGISTRATION #470 I TBPLS FIRM REGISTRATION #10028800

WATER (SAWS PRESSURE ZONE 790 HGL)

DEVELOPER'S NAME: EL RANCHO SONRISA, LLC
ADDRESS: 8626 JODHPUR
CITY: FAIR OAKS RANCH STATE: TEXAS ZIP: 78015
PHONE# (210) 381–9813 FAX#
SAWS BLOCK MAP# 14–6538, 14–6538, 14–8536 & 14–6538 TOTAL EDU'S 77 TOTAL ACREAGE 18.19
TOTAL LINEAR FOOTAGE OF PIPE: 8"–3,794 LF PLAT NO. 22–11800482
NUMBER OF LOTS 73 SAWS JOB NO. 22–1192

SEWER

DEVELOPER'S NAME: EL RANCHO SONRISA, LLC
ADDRESS: 8626 JODHPUR
CITY: FAIR OAKS RANCH STATE: TX ZIP: 78015
PHONE# (210) 381–9813 FAX#
SAWS BLOCK MAP# 148538 & 143586 & 146536 TOTAL EDU'S 73 TOTAL ACREAGE 18.19
TOTAL LINEAR FOOTAGE OF PIPE: 8" – 2977 LF PLAT NO. 22–11800482
NUMBER OF LOTS 73 SAWS JOB NO. 22–1688

SHEET C0.00

PLAT NO. 22-11800482 PD JOB NO. 11100-97 SMILEY TRACT UNIT 1

Date: Dec 05, 2023, 4:19pm User ID: adamja
File: P:\11\00\97\Design\Civil\Civ-1110097.dwg

THIS DOCUMENT HAS BEEN PRODUCED FROM MATERIAL THAT WAS STORED AND/OR TRANSMITTED ELECTRONICALLY AND MAY HAVE BEEN INADVERTENTLY ALTERED. RELY ONLY ON FINAL HARDCOPY MATERIALS BEARING THE CONSULTANT'S ORIGINAL SIGNATURE AND SEAL. AERIAL IMAGERY PROVIDED BY GOOGLE© UNLESS OTHERWISE NOTED. Imagery © 2015,CAPCOG,Digital Globe,Texas Orthoimagery Program, USDA Farm Service Agency.

Proposed Conditions Calculations

Ref. Point	Structure / Description	Drainage Areas #	Area (Ac)	C	Total Flowpath (ft)	Overland/Sheet Flow (TR-55) L_O (FT)	n	P_2	S_O (ft/ft)	T_O* (MIN)	Shallow Concentrated Flow - 1** L_{SC} (FT)	Condition***	Slope (ft/ft)	V_{SC} (FPS)	T_{SC}** (MIN)	Channelized Flow** L_{CH} (FT)	V_{CH} (FPS)	T_{CH}** (MIN)	T_{C-TOT}	Rational Method Q=CIA IDF Curve: CoSA_A14_PA4 Return Year	Intensity (in/hr)	Q (cfs)
1	CULVERT	A	19.97	0.67	1,451	100	0.400	4.44	0.020	18	1,081	U	0.020	2.3	7.9	270	6.0	0.8	26	5	3.96	53.0
																			26	25	5.42	72.5
																			26	100	6.73	90.0
		B	0.86	0.67	682	-	-	-	-	-	-	-	-	-	-	682	6.0	1.9	5	5	7.85	4.5
																			5	25	10.92	6.3
																			5	100	13.65	7.9
2	CULVERT	A+B	20.83	0.67	2,133	100	0.400	4.44	0.020	18	1,081	U	0.020	2.3	7.9	952	6.0	2.6	28	5	3.81	53.2
																			28	25	5.22	72.9
																			28	100	6.48	90.4
		C	0.57	0.67	318	81	0.150	4.44	0.020	7	-	-	-	-	-	237	6.0	0.7	7	5	7.05	2.7
																			7	25	9.89	3.8
																			7	100	12.37	4.7
3	CULVERT	A+B+C	21.40	0.67	2,370	100	0.400	4.44	0.020	18	1,081	U	0.020	2.3	7.9	1,189	6.0	3.3	29	5	3.74	53.6
																			29	25	5.13	73.6
																			29	100	6.36	91.2
		D	0.44	0.67	128	-	-	-	-	-	-	-	-	-	-	128	6.0	0.4	5	5	7.85	2.3
																			5	25	10.92	3.2
																			5	100	13.65	4.0
4	CULVERT	A+B+C+D	21.84	0.67	2,498	100	0.400	4.44	0.020	18	1,081	U	0.020	2.3	7.9	1,317	6.0	3.7	29	5	3.74	54.7
																			29	25	5.13	75.1
																			29	100	6.36	93.1
5	CURB INLET - IN SAG	E	7.00	0.67	932	100	0.150	4.44	0.016	9	832	P	0.013	2.3	5.9	-	-	-	14	5	5.42	25.4
																			14	25	7.53	35.3
																			14	100	9.39	44.0
6	CURB INLET - IN SAG	F	6.48	0.67	1,029	100	0.150	4.44	0.041	6	929	P	0.019	2.8	5.6	-	-	-	11	5	6.02	26.1
																			11	25	8.43	36.6
																			11	100	10.54	45.8
7	4-WAY INLET	G	3.05	0.67	1,129	71	0.150	4.44	0.020	6	-	-	-	-	-	1,058	6.0	2.9	8	5	6.75	13.8
																			8	25	9.48	19.4
																			8	100	11.85	24.2
		H	1.06	0.67	354	100	0.150	4.44	0.020	8	-	-	-	-	-	254	6.0	0.7	8	5	6.75	4.8
																			8	25	9.48	6.7
																			8	100	11.85	8.4
8	CULVERT	A+B+C+D+E+F+G+H	39.43	0.67	2,752	100	0.400	4.44	0.020	18	1,081	U	0.020	2.3	7.9	1,571	6.0	4.4	30	5	3.68	97.2
																			30	25	5.04	133.1
																			30	100	6.25	165.1
		I	15.99	0.97	1,480	-	-	-	-	-	-	-	-	-	-	1,480	6.0	4.1	5	5	7.85	121.8
																			5	25	10.92	169.4
																			5	100	13.65	211.7
9		A+B+C+D+E+F+G+H +I	55.42	0.76	4,232	100	0.400	4.44	0.020	18	1,081	U	0.020	2.3	7.9	3,051	6.0	8.5	34	5	3.45	144.7
																			34	25	4.72	197.9
																			34	100	5.86	245.7

Rational Method Time of Concentration
*Seelye Chart or TR-55 Eqn. 3-3
**As Calculated using Mannings or TR-55 Figure 3-1 or 6 ft/s

From TR-55 Equation 3-3*

$$T_O = \frac{(0.007(n*L)^{0.8})}{(P2^{.5}*S^{.4})} *60$$

From TR-55 Figure 3-1**

$$v = \frac{k}{n} R^{2/3} S_o^{1/2}$$

$$k = 1.486\ ft^{1/3}/s$$

S: For Streets: n = 0.018, R = 0.2 (Adapted from Mannings)
P: For Paved: n = 0.025, R = 0.2
U: For Unpaved: n = 0.05, R = 0.4
D: For Default: v = 6 fps

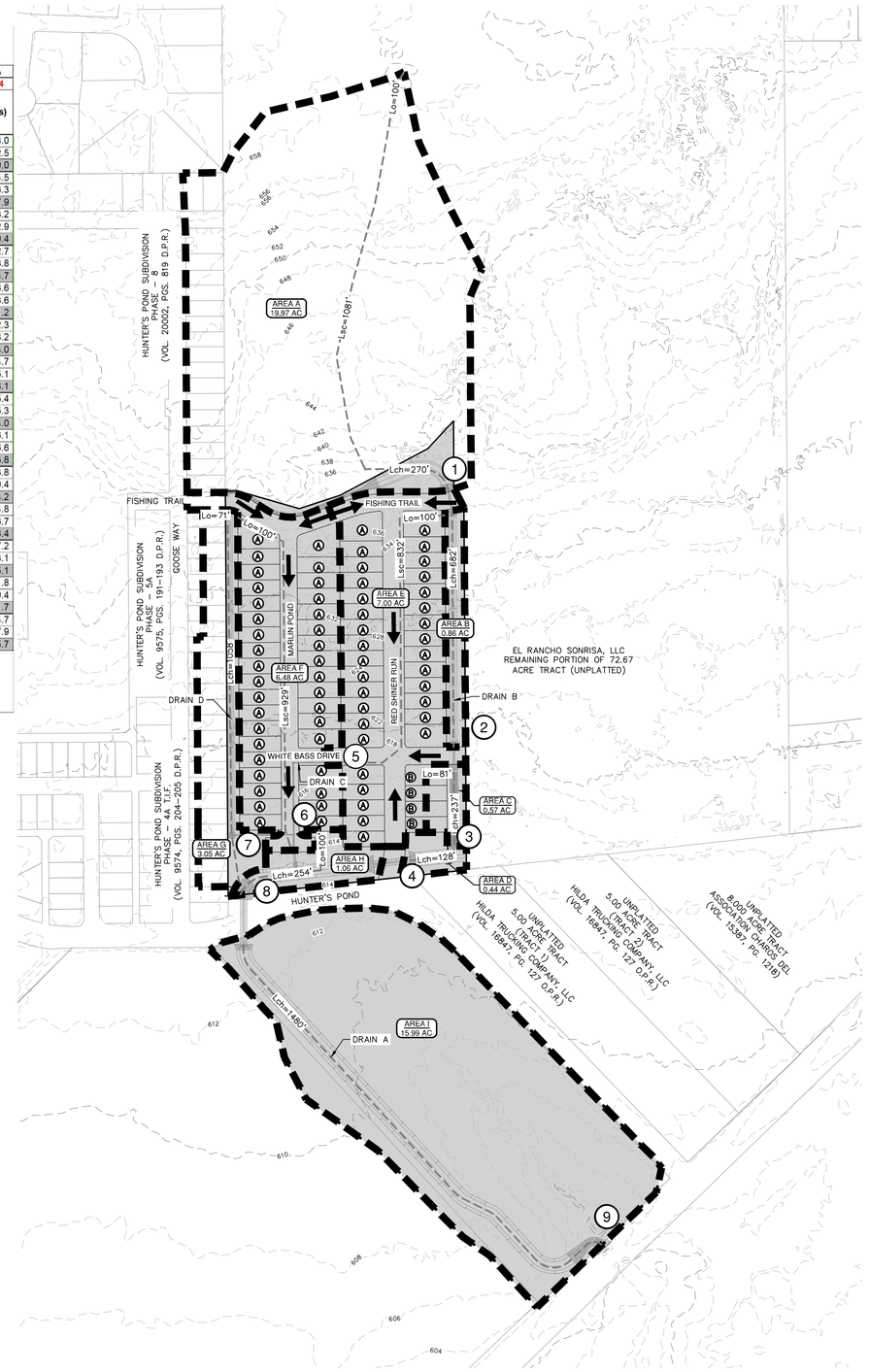

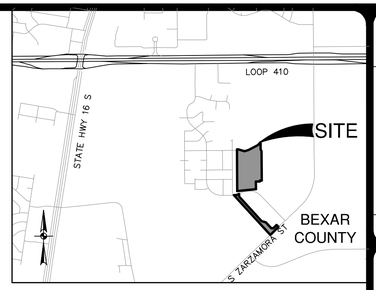

LOCATION MAP

NOT-TO-SCALE

0' 200' 400' 600'

SCALE: 1"= 200'

MASTER DRAINAGE LEGEND

PROJECT LIMITS	
EXISTING CONTOUR	690
100 YR FLOODPLAIN	
RUNOFF FLOW PATH	
DRAINAGE AREA BOUNDARY	
FHA LOT GRADING TYPE	A,B,C
PROPOSED DIRECTION OF FLOW	
DRAINAGE CALCULATION POINT	11
DRAINAGE AREA	AREA 0.00 AC

NO.	REVISION	DATE

STATE OF TEXAS
JON D. ADAME
82567
LICENSED PROFESSIONAL ENGINEER
3-30-23

PAPE-DAWSON ENGINEERS
SAN ANTONIO I AUSTIN I HOUSTON I FORT WORTH I DALLAS
2000 NW LOOP 410 I SAN ANTONIO, TX 78213 I 210.375.9000
TEXAS ENGINEERING FIRM #470 I TEXAS SURVEYING FIRM #10028800

SMILEY TRACT UNIT 1
SAN ANTONIO, TEXAS
MASTER DRAINAGE PLAN

PLAT NO. 22-11800482
JOB NO. 11100-97
DATE MARCH 2023
DESIGNER AA
CHECKED VS DRAWN AA
SHEET C1.00

Date: Mar 30, 2023, 4:58pm User ID: oatry
File: P:\111\00\97\Design\Civil\SDDA-1110097.dwg

THIS DOCUMENT HAS BEEN PRODUCED FROM MATERIAL THAT WAS STORED AND/OR TRANSMITTED ELECTRONICALLY AND MAY HAVE BEEN INADVERTENTLY ALTERED. RELY ONLY ON FINAL HARDCOPY MATERIALS BEARING THE CONSULTANT'S ORIGINAL SIGNATURE AND SEAL. AERIAL IMAGERY PROVIDED BY GOOGLE© UNLESS OTHERWISE NOTED. Imagery © 2016,CAPCOG,Digital Globe,Texas Orthoimagery Program, USDA Farm Service Agency.

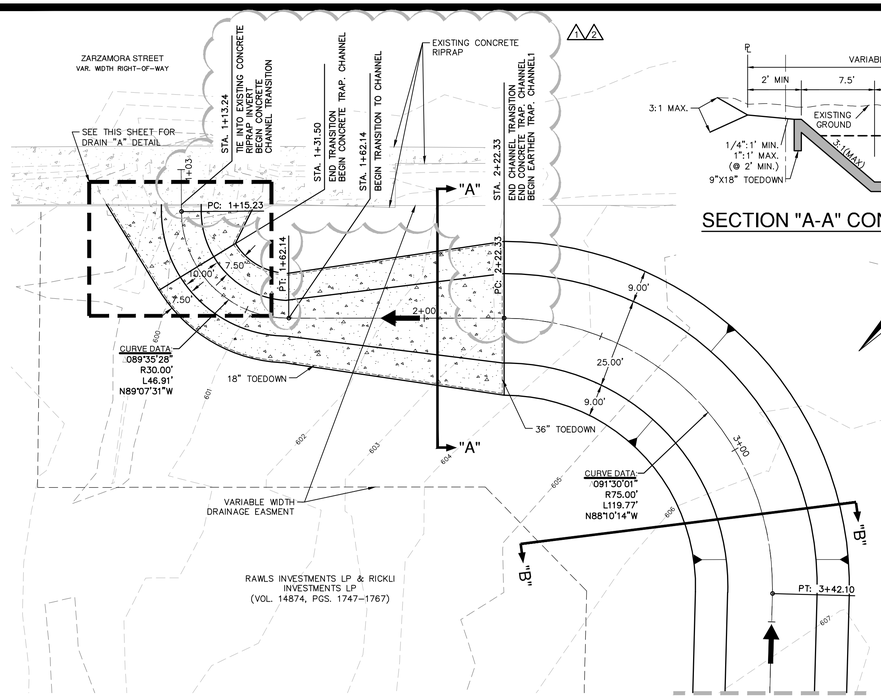

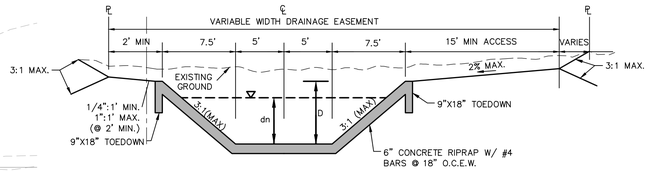

SECTION "A-A" CONCRETE TRAP. CHANNEL

NOT-TO-SCALE

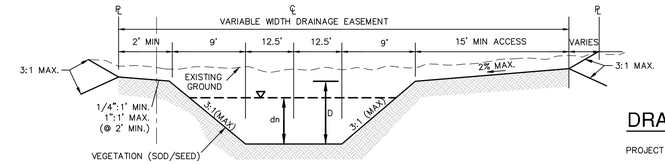

SECTION "B-B" EARTHEN TRAP. CHANNEL

NOT-TO-SCALE

SCALE: 1"= 20'

0' 20' 40' 60'

DRAINAGE LEGEND

- PROJECT LIMITS
- 100 YR FLOODPLAIN
- EXISTING CONTOUR (690)
- PROPOSED CONTOUR (690)
- PROPOSED WATER (W)
- PROPOSED SEWER (SS)
- PROPOSED STORM DRAIN
- EXISTING STORM DRAIN
- FLOW ARROW

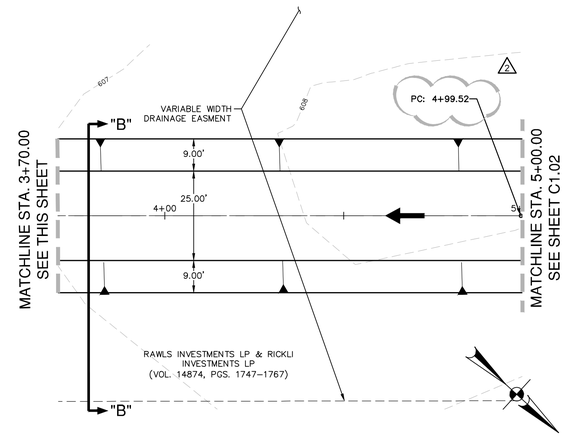

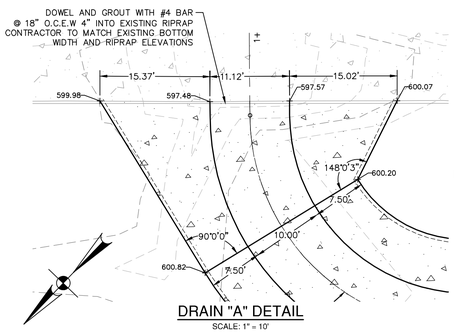

DRAIN "A" DETAIL

SCALE: 1" = 10'

HYDRAULIC CALCULATIONS CONCRETE CHANNEL

STA. 1+13.24 TO 2+22.33
(SECTION A-A)

Q100 =	245.70
Bw =	10'
n =	0.015
S =	0.44%
D =	2.50'
dn =	1.93'
V =	8.06 FPS

HYDRAULIC CALCULATIONS EARTHEN CHANNEL

STA. 2+22.33 TO 15+67.25
(SECTION B-B)

Q100 =	245.70
Bw =	25'
n =	0.035
S =	0.59%
D =	3.00'
dn =	1.85'
V =	4.35 FPS

DRAIN "A"
STA. 1+00.00 TO 5+00.00

VERTICAL SCALE: 1" = 5'
HORIZONTAL SCALE: 1" = 20'

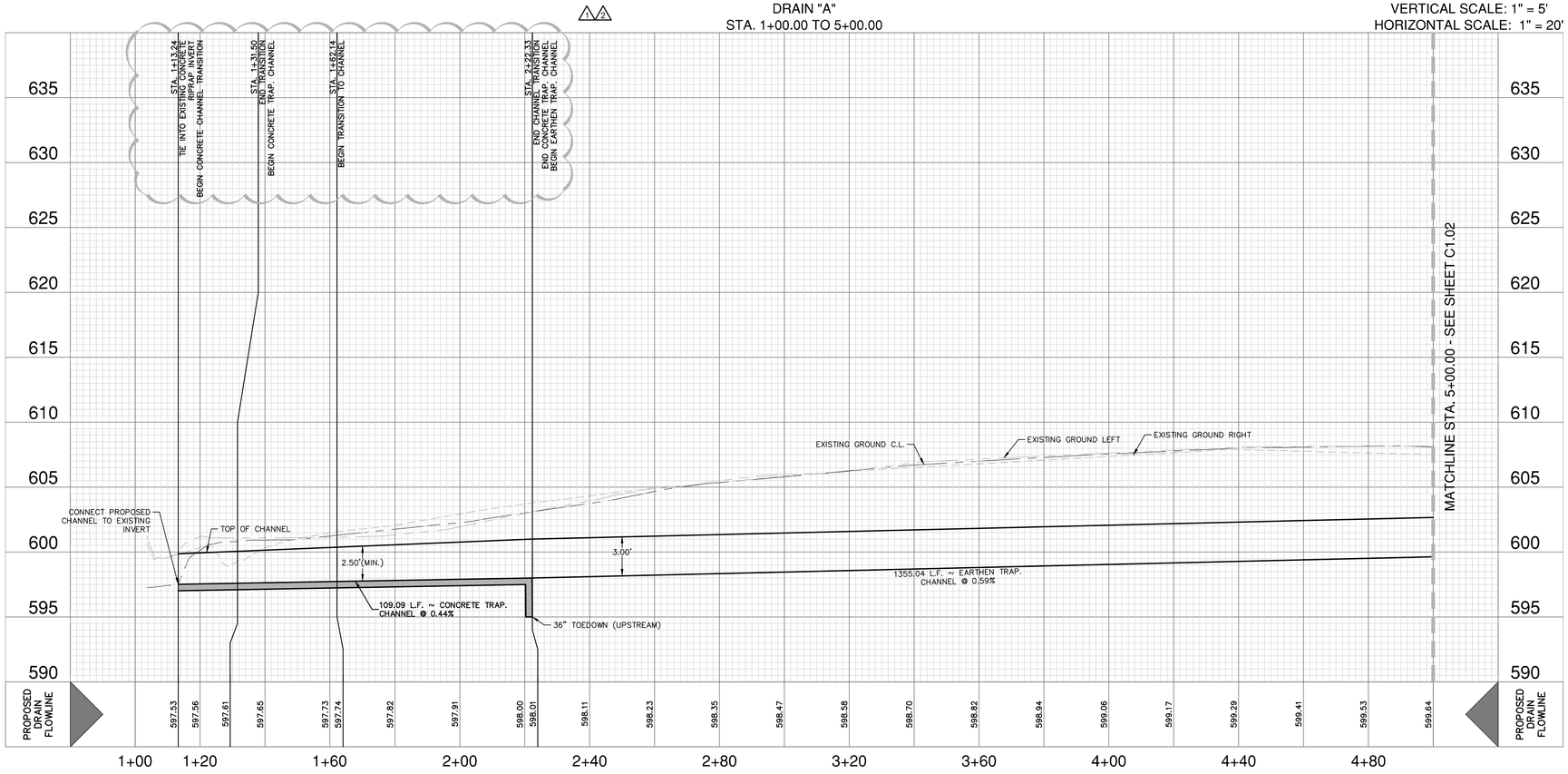

DRAINAGE & GRADING NOTES:

1. A CITY OF SAN ANTONIO ROW PERMIT MUST BE OBTAINED BEFORE WORKING IN BEXAR COUNTY ROW. CONTRACTOR SHALL COORDINATE A TRAFFIC CONTROL PLAN FOR ALL WORK WITHIN THE ROW. ADDITIONAL WARNING SIGNS MAY BE RECOMMENDED BY THE ENGINEER ONCE THE ROADWAYS ARE CONSTRUCTED.
2. THE CONTRACTOR WILL BE RESPONSIBLE FOR DETERMINING EXACT LOCATION OF ALL UTILITIES AND DRAINAGE STRUCTURES WHETHER SHOWN ON THE PLANS OR NOT. THE CONTRACTOR SHALL UNCOVER EXISTING UTILITIES PRIOR TO CONSTRUCTION TO VERIFY SIZE, GRADE, AND LOCATION. THE CONTRACTOR SHALL NOTIFY THE ENGINEER IMMEDIATELY OF ANY DEVIATIONS FROM PLANS PRIOR TO BEGINNING CONSTRUCTION. ANY DAMAGE TO EXISTING UTILITIES, WHETHER SHOWN ON THE PLANS OR NOT, SHALL BE THE CONTRACTOR'S RESPONSIBILITY TO REPAIR, AT HIS EXPENSE.
3. ALL CONCRETE FOR TXDOT DRAINAGE STRUCTURES SHALL MEET TXDOT SPECIFICATIONS. ALL OTHER CONCRETE SHALL BE CLASS "A" 3000 PSI CYLINDER STRENGTH IN 28 DAYS.
4. REFERENCE DRAINAGE DETAILS FOR PIPE TRENCH DETAILS, BOX CULVERT, HEADWALL, AND WINGWALL CONSTRUCTION DETAILS, AND BOX CULVERT BEDDING AND EXCAVATION LIMITS.
5. CONTRACTOR SHALL GROUT ALL CURB INLETS AND JUNCTION BOXES TO PROVIDE FOR POSITIVE DRAINAGE.
6. EARTHEN CHANNELS WILL BE VEGETATED BY SEEDING OR SODDING. 85% OF THE CHANNEL SURFACE MUST HAVE ESTABLISHED VEGETATION BEFORE THE CITY OF SAN ANTONIO WILL ACCEPT.
7. CONTRACTOR SHALL MATCH TOP OF CHANNEL TO NATURAL GROUND AND MAINTAIN A MINIMUM CHANNEL DEPTH OF "D" AS SHOWN IN THE PROFILE.

TRENCH EXCAVATION SAFETY PROTECTION:

CONTRACTOR AND/ OR CONTRACTOR'S INDEPENDENTLY RETAINED EMPLOYEE OR STRUCTURAL DESIGN/ GEOTECHNICAL/ SAFETY/EQUIPMENT CONSULTANT, IF ANY, SHALL REVIEW THESE PLANS AND ANY AVAILABLE GEOTECHNICAL INFORMATION AND THE ANTICIPATED INSTALLATION SITES WITHIN THE PROJECT WORK AREA IN ORDER TO IMPLEMENT CONTRACTOR'S TRENCH EXCAVATION SAFETY PROTECTION SYSTEMS, PROGRAMS AND /OR PROCEDURES FOR THE PROJECT DESCRIBED IN THE CONTRACT DOCUMENTS. THE CONTRACTOR'S IMPLEMENTATION OF THESE SYSTEMS, PROGRAMS AND/OR PROCEDURES SHALL PROVIDE FOR ADEQUATE TRENCH EXCAVATION SAFETY PROTECTION THAT COMPLY WITH AS A MINIMUM, OSHA STANDARDS FOR TRENCH EXCAVATIONS. SPECIFICALLY, CONTRACTOR AND/OR CONTRACTOR'S INDEPENDENTLY RETAINED EMPLOYEE OR SAFETY CONSULTANT SHALL IMPLEMENT A TRENCH SAFETY PROGRAM IN ACCORDANCE WITH OSHA STANDARDS GOVERNING THE PRESENCE AND ACTIVITIES OF INDIVIDUALS WORKING IN AND AROUND TRENCH EXCAVATION.

CAUTION!!

CONTRACTOR SHALL BE REQUIRED TO LOCATE ALL PUBLIC OR PRIVATE UTILITIES INCLUDING BUT NOT LIMITING TO: WATER, SEWER, TELEPHONE AND FIBER OPTIC LINES, SITE LIGHTING ELECTRIC, SECONDARY ELECTRIC, PRIMARY ELECTRICAL DUCTBANKS, LANDSCAPE IRRIGATION FACILITIES, AND GAS LINES. ANY UTILITY CONFLICTS THAT ARISE SHOULD BE COMMUNICATED TO THE ENGINEER IMMEDIATELY AND PRIOR TO CONSTRUCTION. THE CONTRACTOR SHALL CONTACT 1-800-DIG-TESS A MINIMUM OF 48 HOURS PRIOR TO THE START OF CONSTRUCTION. ANY DAMAGE TO EXISTING UTILITIES SHALL BE THE SOLE RESPONSIBILITY OF THE CONTRACTOR AND THE REPAIR SHALL BE AT CONTRACTOR'S SOLE EXPENSE WHETHER THE UTILITY IS SHOWN ON THESE PLANS OR NOT.

NO.	REVISION	DATE
1	CHANNEL TIE IN REVISION	5/20/24
2	REVISED STATIONING	6/27/24

STATE OF TEXAS
JON D. ADAME
82567
LICENSED
PROFESSIONAL ENGINEER
6-27-24

PAPE-DAWSON ENGINEERS
SAN ANTONIO I AUSTIN I HOUSTON I FORT WORTH I DALLAS
2000 NW LOOP 410 I SAN ANTONIO, TX 78213 I 210.375.9000
TEXAS ENGINEERING FIRM #470 I TEXAS SURVEYING FIRM #10028800

SMILEY TRACT UNIT 1
SAN ANTONIO, TEXAS

DRAIN A STA. 1+00.00 TO 5+00.00
PLAN & PROFILE

PLAT NO.	22-11800482
JOB NO.	11100-97
DATE	AUGUST 2023
DESIGNER	AA
CHECKED	VS DRAWN AA
SHEET	C1.01

Date: Jun 27, 2024, 4:22pm User ID: oatry
File: P:\111\00\97\Design\Civil\SDA1-1110097.dwg

THIS DOCUMENT HAS BEEN PRODUCED FROM MATERIAL THAT WAS STORED AND/OR TRANSMITTED ELECTRONICALLY AND MAY HAVE BEEN INADVERTENTLY ALTERED. RELY ONLY ON FINAL HARDCOPY MATERIALS BEARING THE CONSULTANT'S ORIGINAL SIGNATURE AND SEAL. AERIAL IMAGERY PROVIDED BY GOOGLE© UNLESS OTHERWISE NOTED. Imagery © 2016,CAPCOG,Digital Globe,Texas Orthoimagery Program, USDA Farm Service Agency.

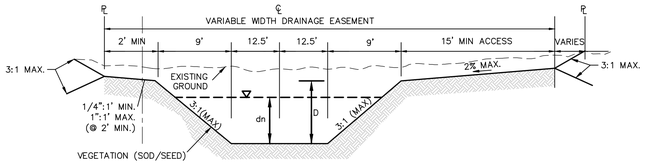

SECTION "B-B" EARTHEN TRAP. CHANNEL

NOT-TO-SCALE

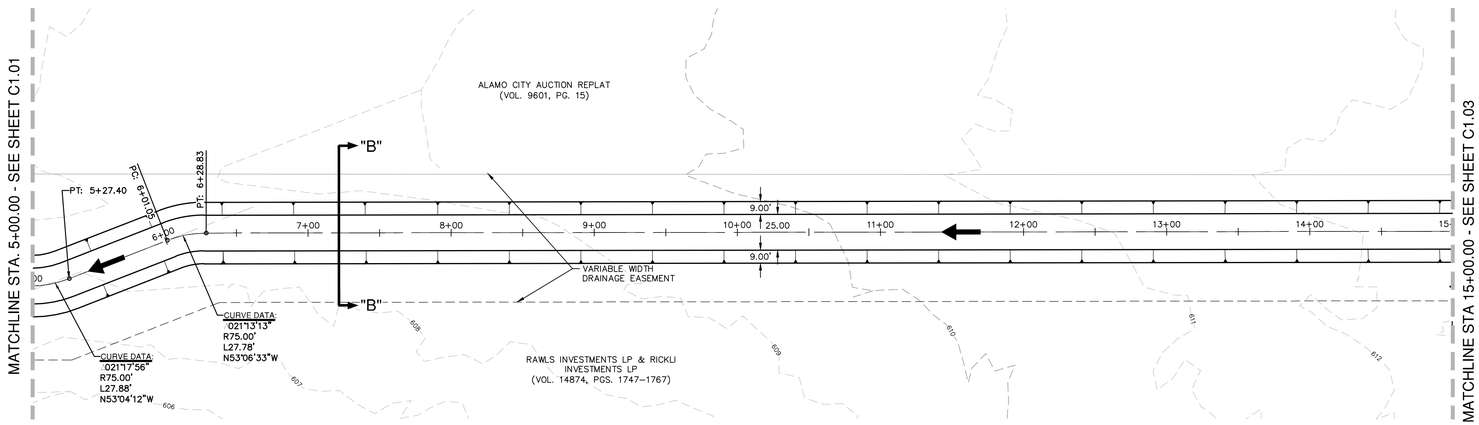

DRAIN "A"
STA. 5+00.00 TO 15+00.00

VERTICAL SCALE: 1" = 5'
HORIZONTAL SCALE: 1" = 50'

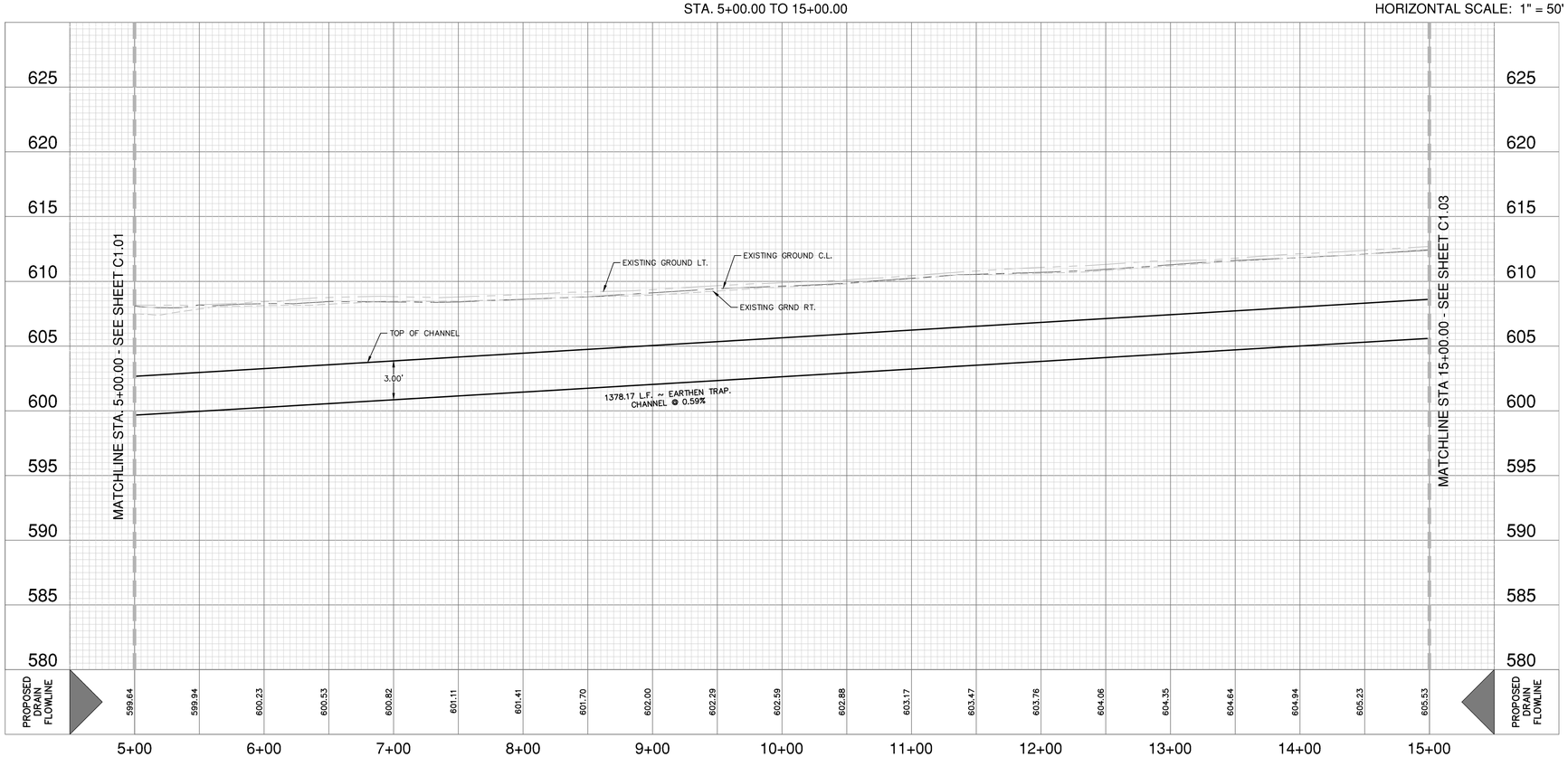

SCALE: 1"= 50'
0' 50' 100' 150'

DRAINAGE LEGEND

- PROJECT LIMITS
- 100 YR FLOODPLAIN
- EXISTING CONTOUR (690)
- PROPOSED CONTOUR (690)
- PROPOSED WATER (W)
- PROPOSED SEWER (SS)
- PROPOSED STORM DRAIN
- EXISTING STORM DRAIN
- FLOW ARROW

HYDRAULIC CALCULATIONS
EARTHEN CHANNEL
STA. 2+22.33 TO 15+67.25
(SECTION B-B)

Q100= 245.70
Bw = 25'
n = 0.035
S = 0.59%
D = 3.00'
dn = 1.85'
V = 4.35 FPS

DRAINAGE & GRADING NOTES:

1. A CITY OF SAN ANTONIO ROW PERMIT MUST BE OBTAINED BEFORE WORKING IN BEXAR COUNTY ROW. CONTRACTOR SHALL COORDINATE A TRAFFIC CONTROL PLAN FOR ALL WORK WITHIN THE ROW. ADDITIONAL WARNING SIGNS MAY BE RECOMMENDED BY THE ENGINEER ONCE THE ROADWAYS ARE CONSTRUCTED.
2. THE CONTRACTOR WILL BE RESPONSIBLE FOR DETERMINING EXACT LOCATION OF ALL UTILITIES AND DRAINAGE STRUCTURES WHETHER SHOWN ON THE PLANS OR NOT. THE CONTRACTOR SHALL UNCOVER EXISTING UTILITIES PRIOR TO CONSTRUCTION TO VERIFY SIZE, GRADE, AND LOCATION. THE CONTRACTOR SHALL NOTIFY THE ENGINEER IMMEDIATELY OF ANY DEVIATIONS FROM PLANS PRIOR TO BEGINNING CONSTRUCTION. ANY DAMAGE TO EXISTING UTILITIES, WHETHER SHOWN ON THE PLANS OR NOT, SHALL BE THE CONTRACTOR'S RESPONSIBILITY TO REPAIR, AT HIS EXPENSE.
3. ALL CONCRETE FOR TXDOT DRAINAGE STRUCTURES SHALL MEET TXDOT SPECIFICATIONS. ALL OTHER CONCRETE SHALL BE CLASS "A" 3000 PSI CYLINDER STRENGTH IN 28 DAYS.
4. REFERENCE DRAINAGE DETAILS FOR PIPE TRENCH DETAILS, BOX CULVERT, HEADWALL, AND WINGWALL CONSTRUCTION DETAILS, AND BOX CULVERT BEDDING AND EXCAVATION LIMITS.
5. CONTRACTOR SHALL GROUT ALL CURB INLETS AND JUNCTION BOXES TO PROVIDE FOR POSITIVE DRAINAGE.
6. EARTHEN CHANNELS WILL BE VEGETATED BY SEEDING OR SODDING. 85% OF THE CHANNEL SURFACE MUST HAVE ESTABLISHED VEGETATION BEFORE THE CITY OF SAN ANTONIO WILL ACCEPT.
7. CONTRACTOR SHALL MATCH TOP OF CHANNEL TO NATURAL GROUND AND MAINTAIN A MINIMUM CHANNEL DEPTH OF "D" AS SHOWN IN THE PROFILE.

TRENCH EXCAVATION SAFETY PROTECTION:

CONTRACTOR AND/ OR CONTRACTOR'S INDEPENDENTLY RETAINED EMPLOYEE OR STRUCTURAL DESIGN/ GEOTECHNICAL/ SAFETY/EQUIPMENT CONSULTANT, IF ANY, SHALL REVIEW THESE PLANS AND ANY AVAILABLE GEOTECHNICAL INFORMATION AND THE ANTICIPATED INSTALLATION SITES WITHIN THE PROJECT WORK AREA IN ORDER TO IMPLEMENT CONTRACTOR'S TRENCH EXCAVATION SAFETY PROTECTION SYSTEMS, PROGRAMS AND /OR PROCEDURES FOR THE PROJECT DESCRIBED IN THE CONTRACT DOCUMENTS. THE CONTRACTOR'S IMPLEMENTATION OF THESE SYSTEMS, PROGRAMS AND/OR PROCEDURES SHALL PROVIDE FOR ADEQUATE TRENCH EXCAVATION SAFETY PROTECTION THAT COMPLY WITH AS A MINIMUM, OSHA STANDARDS FOR TRENCH EXCAVATIONS. SPECIFICALLY, CONTRACTOR AND/OR CONTRACTOR'S INDEPENDENTLY RETAINED EMPLOYEE OR SAFETY CONSULTANT SHALL IMPLEMENT A TRENCH SAFETY PROGRAM IN ACCORDANCE WITH OSHA STANDARDS GOVERNING THE PRESENCE AND ACTIVITIES OF INDIVIDUALS WORKING IN AND AROUND TRENCH EXCAVATION.

CAUTION!!

CONTRACTOR SHALL BE REQUIRED TO LOCATE ALL PUBLIC OR PRIVATE UTILITIES INCLUDING BUT NOT LIMITING TO: WATER, SEWER, TELEPHONE AND FIBER OPTIC LINES, SITE LIGHTING ELECTRIC, SECONDARY ELECTRIC, PRIMARY ELECTRICAL DUCTBANKS, LANDSCAPE IRRIGATION FACILITIES, AND GAS LINES. ANY UTILITY CONFLICTS THAT ARISE SHOULD BE COMMUNICATED TO THE ENGINEER IMMEDIATELY AND PRIOR TO CONSTRUCTION. THE CONTRACTOR SHALL CONTACT 1-800-DIG-TESS A MINIMUM OF 48 HOURS PRIOR TO THE START OF CONSTRUCTION. ANY DAMAGE TO EXISTING UTILITIES SHALL BE THE SOLE RESPONSIBILITY OF THE CONTRACTOR AND THE REPAIR SHALL BE AT CONTRACTOR'S SOLE EXPENSE WHETHER THE UTILITY IS SHOWN ON THESE PLANS OR NOT.

NO.	REVISION	DATE
1	REVISED STATIONING	6/27/24

STATE OF TEXAS
JON D. ADAME
82567
LICENSED
PROFESSIONAL ENGINEER
6-27-24

PAPE-DAWSON ENGINEERS
SAN ANTONIO I AUSTIN I HOUSTON I FORT WORTH I DALLAS
2000 NW LOOP 410 I SAN ANTONIO, TX 78213 I 210.375.9000
TEXAS ENGINEERING FIRM #470 I TEXAS SURVEYING FIRM #10028800

SMILEY TRACT UNIT 1
SAN ANTONIO, TEXAS

DRAIN A STA. 5+00.00 TO 15+00.00
PLAN & PROFILE

PLAT NO. 22-11800482
JOB NO. 11100-97
DATE AUGUST 2023
DESIGNER AA
CHECKED VS DRAWN AA
SHEET C1.02

Date: Jun 27, 2024, 4:25pm User ID: oatry
File: P:\111\00\97\Design\Civil\SDA1-1110097.dwg

THIS DOCUMENT HAS BEEN PRODUCED FROM MATERIAL THAT WAS STORED AND/OR TRANSMITTED ELECTRONICALLY AND MAY HAVE BEEN INADVERTENTLY ALTERED. RELY ONLY ON FINAL HARDCOPY MATERIALS BEARING THE CONSULTANT'S ORIGINAL SIGNATURE AND SEAL. AERIAL IMAGERY PROVIDED BY GOOGLE© UNLESS OTHERWISE NOTED. Imagery © 2016,CAPCOG,Digital Globe,Texas Orthoimagery Program, USDA Farm Service Agency.

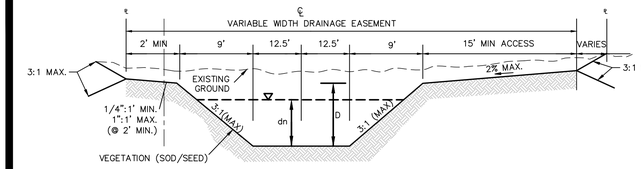

SECTION "B-B" EARTHEN TRAP. CHANNEL

NOT-TO-SCALE

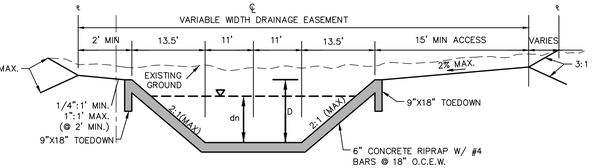

SECTION "C-C" CONCRETE TRAP. CHANNEL

NOT-TO-SCALE

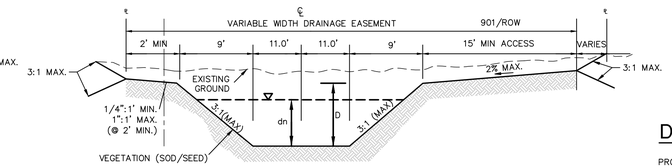

SECTION "D-D" EARTHEN TRAP. CHANNEL

NOT-TO-SCALE

SCALE: 1"= 20'

0' 20' 40' 60'

DRAINAGE LEGEND

- PROJECT LIMITS
- 100 YR FLOODPLAIN
- EXISTING CONTOUR — 690
- PROPOSED CONTOUR — 690
- PROPOSED WATER — W
- PROPOSED SEWER — SS
- PROPOSED STORM DRAIN
- EXISTING STORM DRAIN
- FLOW ARROW

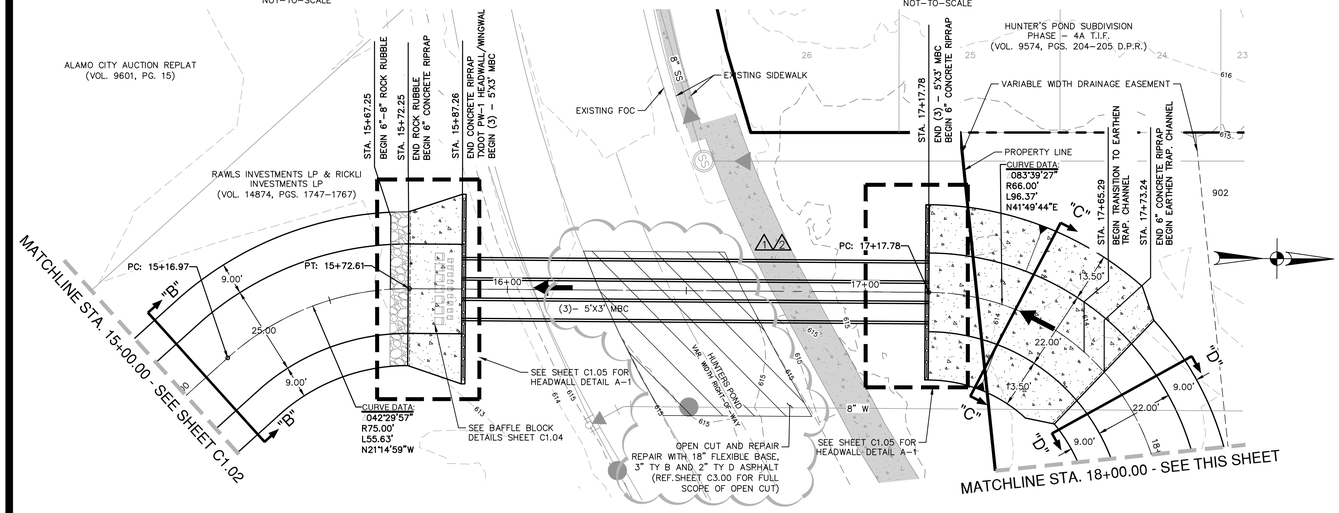

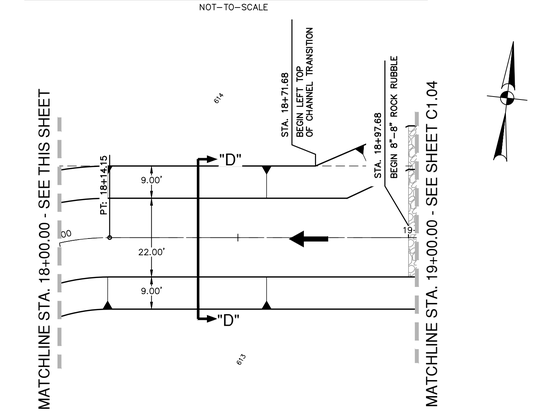

HYDRAULIC CALCULATIONS EARTHEN CHANNEL STA. 2+22.33 TO 15+67.25 (SECTION B-B)	HYDRAULIC CALCULATIONS ROCK CHANNEL STA. 15+67.25 TO 15+72.25 (SECTION B-B)
Q100= 245.70	Q100= 245.70
Bw = 25'	Bw = 25'
n = 0.035	n = 0.040
S = 0.59%	S = 0.59%
D = 3.00'	D = 3.00'
dn = 1.85'	dn = 1.99'
V = 4.35 FPS	V = 3.97 FPS

HYDRAULIC CALCULATIONS CONCRETE CHANNEL STA. 15+72.75 TO 15+87.26 (SECTION B-B)
Q100= 245.70
Bw = 25'
n = 0.013
S = 0.59%
D = 3.00'
dn = 1.04'
V = 8.36 FPS

DRAIN "A"
STA. 15+00.00 TO 19+00.00

VERTICAL SCALE: 1" = 5'
HORIZONTAL SCALE: 1" = 20'

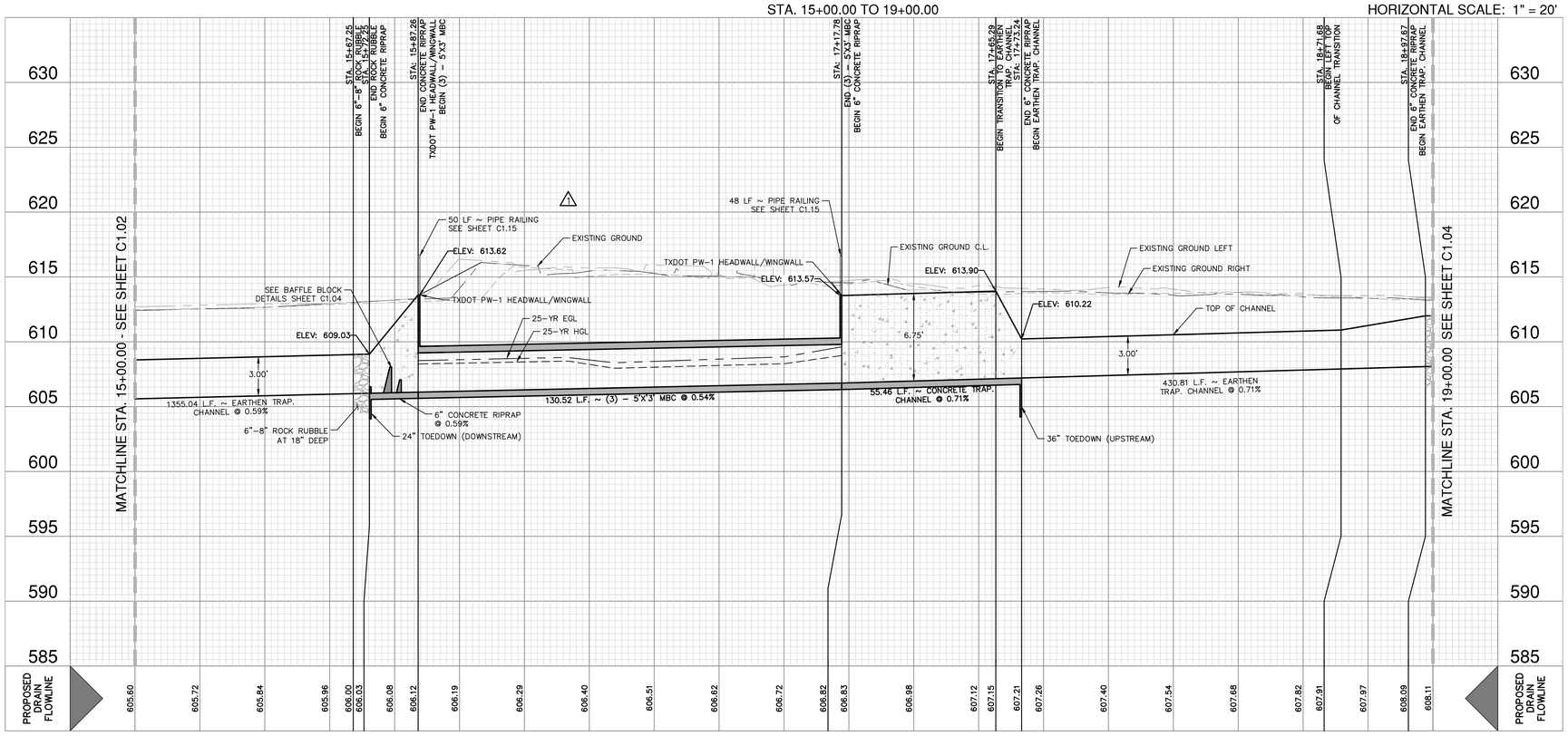

HYDRAULIC CALCULATIONS CONCRETE CHANNEL STA. 17+17.78 to 17+73.24 (SECTION C-C)
Q25 = 133.10
Bw = 22'
n = 0.015
S = 0.71%
D = 6.75'
dn = 0.82'
V = 6.87 FPS

HYDRAULIC CALCULATIONS EARTHEN CHANNEL STA. 17+73.24 TO 18+71.68 (SECTION D-D)
Q25 = 133.10
Bw = 22'
n = 0.035
S = 0.71%
D = 3.00'
dn = 1.33'
V = 3.86 FPS

HYDRAULIC CALCULATIONS ROCK CHANNEL STA. 18+71.68 TO 19+17.67 (SECTION C-C)
Q25 = 133.10
Bw = 22'
n = 0.040
S = 0.71%
D = 3.00'
dn = 1.43'
V = 3.53 FPS

DRAINAGE & GRADING NOTES:

1. A CITY OF SAN ANTONIO ROW PERMIT MUST BE OBTAINED BEFORE WORKING IN BEXAR COUNTY ROW. CONTRACTOR SHALL COORDINATE A TRAFFIC CONTROL PLAN FOR ALL WORK WITHIN THE ROW. ADDITIONAL WARNING SIGNS MAY BE RECOMMENDED BY THE ENGINEER ONCE THE ROADWAYS ARE CONSTRUCTED.
2. THE CONTRACTOR WILL BE RESPONSIBLE FOR DETERMINING EXACT LOCATION OF ALL UTILITIES AND DRAINAGE STRUCTURES WHETHER SHOWN ON THE PLANS OR NOT. THE CONTRACTOR SHALL UNCOVER EXISTING UTILITIES PRIOR TO CONSTRUCTION TO VERIFY SIZE, GRADE, AND LOCATION. THE CONTRACTOR SHALL NOTIFY THE ENGINEER IMMEDIATELY OF ANY DEVIATIONS FROM PLANS PRIOR TO BEGINNING CONSTRUCTION. ANY DAMAGE TO EXISTING UTILITIES, WHETHER SHOWN ON THE PLANS OR NOT, SHALL BE THE CONTRACTOR'S RESPONSIBILITY TO REPAIR, AT HIS EXPENSE.
3. ALL CONCRETE FOR TXDOT DRAINAGE STRUCTURES SHALL MEET TXDOT SPECIFICATIONS. ALL OTHER CONCRETE SHALL BE CLASS "A" 3000 PSI CYLINDER STRENGTH IN 28 DAYS.
4. REFERENCE DRAINAGE DETAILS FOR PIPE TRENCH DETAILS, BOX CULVERT, HEADWALL, AND WINGWALL CONSTRUCTION DETAILS, AND BOX CULVERT BEDDING AND EXCAVATION LIMITS.
5. CONTRACTOR SHALL GROUT ALL CURB INLETS AND JUNCTION BOXES TO PROVIDE FOR POSITIVE DRAINAGE.
6. EARTHEN CHANNELS WILL BE VEGETATED BY SEEDING OR SODDING. 85% OF THE CHANNEL SURFACE MUST HAVE ESTABLISHED VEGETATION BEFORE THE CITY OF SAN ANTONIO WILL ACCEPT.
7. CONTRACTOR SHALL MATCH TOP OF CHANNEL TO NATURAL GROUND AND MAINTAIN A MINIMUM CHANNEL DEPTH OF "D" AS SHOWN IN THE PROFILE.

TRENCH EXCAVATION SAFETY PROTECTION:

CONTRACTOR AND/ OR CONTRACTOR'S INDEPENDENTLY RETAINED EMPLOYEE OR STRUCTURAL DESIGN/ GEOTECHNICAL/ SAFETY/EQUIPMENT CONSULTANT, IF ANY, SHALL REVIEW THESE PLANS AND ANY AVAILABLE GEOTECHNICAL INFORMATION AND THE ANTICIPATED INSTALLATION SITES WITHIN THE PROJECT WORK AREA IN ORDER TO IMPLEMENT CONTRACTOR'S TRENCH EXCAVATION SAFETY PROTECTION SYSTEMS, PROGRAMS AND /OR PROCEDURES FOR THE PROJECT DESCRIBED IN THE CONTRACT DOCUMENTS. THE CONTRACTOR'S IMPLEMENTATION OF THESE SYSTEMS, PROGRAMS AND/OR PROCEDURES SHALL PROVIDE FOR ADEQUATE TRENCH EXCAVATION SAFETY PROTECTION THAT COMPLY WITH AS A MINIMUM, OSHA STANDARDS FOR TRENCH EXCAVATIONS. SPECIFICALLY, CONTRACTOR AND/OR CONTRACTOR'S INDEPENDENTLY RETAINED EMPLOYEE OR SAFETY CONSULTANT SHALL IMPLEMENT A TRENCH SAFETY PROGRAM IN ACCORDANCE WITH OSHA STANDARDS GOVERNING THE PRESENCE AND ACTIVITIES OF INDIVIDUALS WORKING IN AND AROUND TRENCH EXCAVATION.

CAUTION!!

CONTRACTOR SHALL BE REQUIRED TO LOCATE ALL PUBLIC OR PRIVATE UTILITIES INCLUDING BUT NOT LIMITING TO: WATER, SEWER, TELEPHONE AND FIBER OPTIC LINES, SITE LIGHTING ELECTRIC, SECONDARY ELECTRIC, PRIMARY ELECTRICAL DUCTBANKS, LANDSCAPE IRRIGATION FACILITIES, AND GAS LINES. ANY UTILITY CONFLICTS THAT ARISE SHOULD BE COMMUNICATED TO THE ENGINEER IMMEDIATELY AND PRIOR TO CONSTRUCTION. THE CONTRACTOR SHALL CONTACT 1-800-DIG-TESS A MINIMUM OF 48 HOURS PRIOR TO THE START OF CONSTRUCTION. ANY DAMAGE TO EXISTING UTILITIES SHALL BE THE SOLE RESPONSIBILITY OF THE CONTRACTOR AND THE REPAIR SHALL BE AT CONTRACTOR'S SOLE EXPENSE WHETHER THE UTILITY IS SHOWN ON THESE PLANS OR NOT.

NO.	REVISION	DATE
1	HEADWALL HEIGHT REVISED	12/11/23
	REVISED OPEN CUT LIMITS	
2	REPAIR DETAILS REVISED	09/05/24

STATE OF TEXAS
JON D. ADAME
82567
LICENSED
PROFESSIONAL ENGINEER

Jon Adame
9-5-24

PAPE-DAWSON ENGINEERS
SAN ANTONIO I AUSTIN I HOUSTON I FORT WORTH I DALLAS
2000 NW LOOP 410 I SAN ANTONIO, TX 78213 I 210.375.9000
TEXAS ENGINEERING FIRM #470 I TEXAS SURVEYING FIRM #10028800

SMILEY TRACT UNIT 1

SAN ANTONIO, TEXAS

DRAIN A STA. 15+00.00 TO 19+00.00
PLAN & PROFILE

PLAT NO. 22-11800482
JOB NO. 11100-97
DATE AUGUST 2023
DESIGNER AA
CHECKED VS DRAWN AA
SHEET C1.03

Date: Sep 05, 2024, 9:59am User ID: ostry
File: P:\111\00\97\Design\Civil\SDA1-1110097.dwg

THIS DOCUMENT HAS BEEN PRODUCED FROM MATERIAL THAT WAS STORED AND/OR TRANSMITTED ELECTRONICALLY AND MAY HAVE BEEN INADVERTENTLY ALTERED. RELY ONLY ON FINAL HARDCOPY MATERIALS BEARING THE CONSULTANT'S ORIGINAL SIGNATURE AND SEAL. AERIAL IMAGERY PROVIDED BY GOOGLE© UNLESS OTHERWISE NOTED. Imagery © 2016,CAPCOG,Digital Globe,Texas Orthoimagery Program, USDA Farm Service Agency.

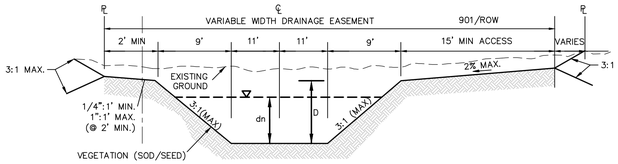

SECTION "D-D" EARTHEN TRAP. CHANNEL

NOT-TO-SCALE

HYDRAULIC CALCULATIONS ROCK CHANNEL STA. 18+97.67 TO 19+17.67 (SECTION D-D)	HYDRAULIC CALCULATIONS EARTHEN CHANNEL STA. 19+17.67 TO 21+10.92 (SECTION D-D)	HYDRAULIC CALCULATIONS ROCK CHANNEL STA. 21+10.92 TO 21+15.92 (SECTION D-D)	HYDRAULIC CALCULATIONS CONCRETE CHANNEL STA. 21+15.92 TO 21+30.92 (SECTION D-D)	HYDRAULIC CALCULATIONS CONCRETE CHANNEL STA. 22+36.96 TO 22+51.96 (SECTION D-D)	HYDRAULIC CALCULATIONS EARTHEN CHANNEL STA. 22+51.96 TO 23+48.31 (SECTION D-D)
Q25 = 133.10	Q25 = 133.10	Q25 = 133.10	Q25 = 133.10	Q25 = 75.10	Q25 = 75.10
Bw = 22'	Bw = 22'	Bw = 22'	Bw = 22'	Bw = 22'	Bw = 22'
n = 0.040	n = 0.035	n = 0.040	n = 0.013	n = 0.013	n = 0.035
S = 0.71%	S = 0.71%	S = 0.71%	S = 0.71%	S = 0.50%	S = 0.50%
D = 3.00'	D = 3.00'	D = 3.00'	D = 3.00' (MIN.)	D = 3.00'	D = 3.00'
dn = 1.43'	dn = 1.33'	dn = 1.43'	dn = 0.74'	dn = 0.59'	dn = 0.95'
V = 3.53 FPS	V = 3.86 FPS	V = 3.53 FPS	V = 7.37 FPS	V = 5.38 FPS	V = 3.17 FPS

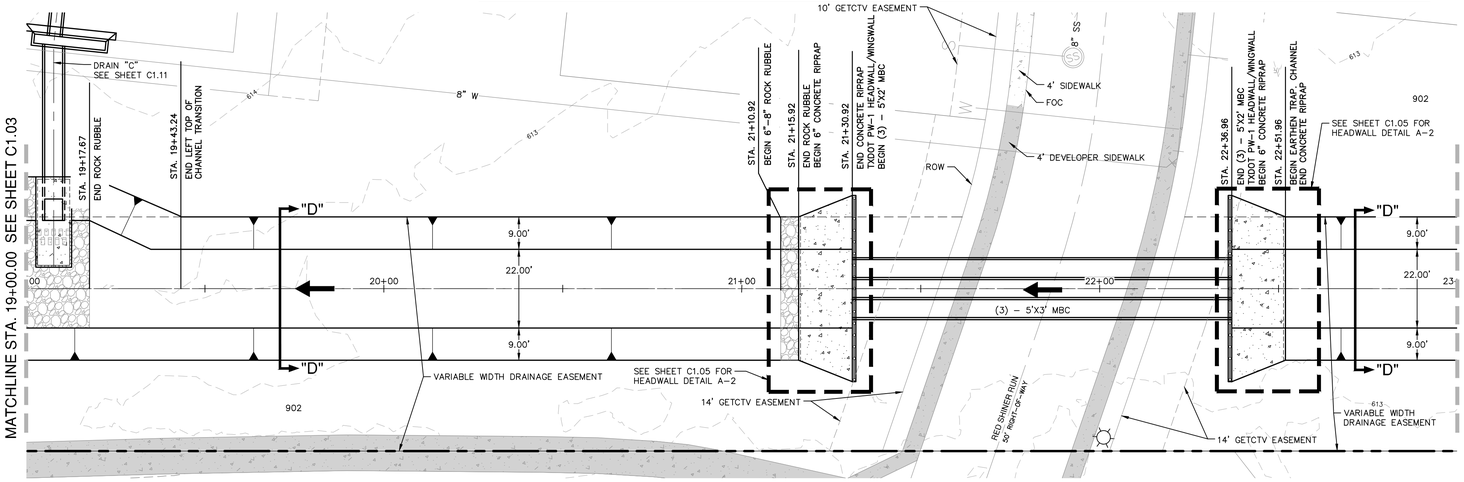

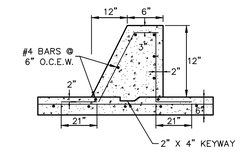

BAFFLE BLOCK 1 DETAIL

NOT-TO-SCALE

SCALE: 1"= 20'

0' 20' 40' 60'

DRAINAGE LEGEND

- PROJECT LIMITS
- 100 YR FLOODPLAIN
- EXISTING CONTOUR (690)
- PROPOSED CONTOUR (690)
- PROPOSED WATER (W)
- PROPOSED SEWER (SS)
- PROPOSED STORM DRAIN
- EXISTING STORM DRAIN
- FLOW ARROW

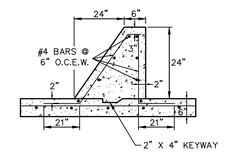

BAFFLE BLOCK 2 DETAIL

NOT-TO-SCALE

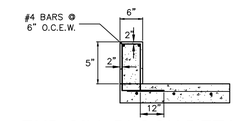

END SILL BLOCK DETAIL

NOT-TO-SCALE

DRAIN "A"
STA. 19+00.00 TO 23+00.00

VERTICAL SCALE: 1" = 5'
HORIZONTAL SCALE: 1" = 20'

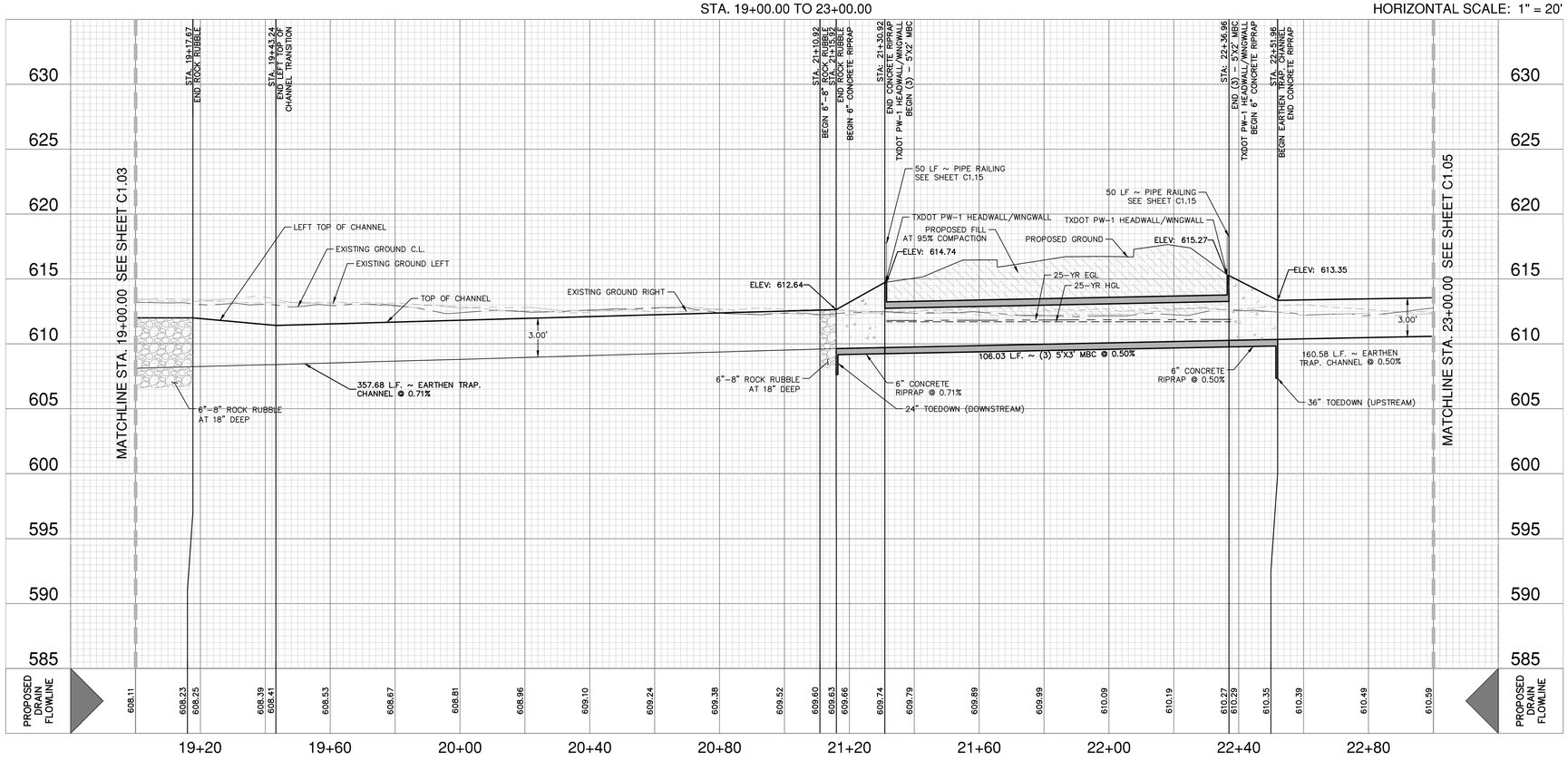

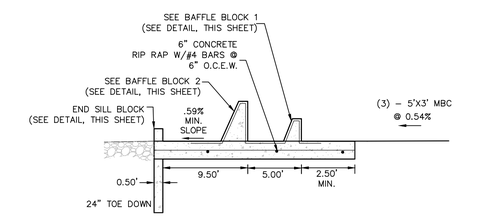

BAFFLE BLOCKS DETAIL

NOT-TO-SCALE

DRAINAGE & GRADING NOTES:

1. A CITY OF SAN ANTONIO ROW PERMIT MUST BE OBTAINED BEFORE WORKING IN BEXAR COUNTY ROW. CONTRACTOR SHALL COORDINATE A TRAFFIC CONTROL PLAN FOR ALL WORK WITHIN THE ROW. ADDITIONAL WARNING SIGNS MAY BE RECOMMENDED BY THE ENGINEER ONCE THE ROADWAYS ARE CONSTRUCTED.
2. THE CONTRACTOR WILL BE RESPONSIBLE FOR DETERMINING EXACT LOCATION OF ALL UTILITIES AND DRAINAGE STRUCTURES WHETHER SHOWN ON THE PLANS OR NOT. THE CONTRACTOR SHALL UNCOVER EXISTING UTILITIES PRIOR TO CONSTRUCTION TO VERIFY SIZE, GRADE, AND LOCATION. THE CONTRACTOR SHALL NOTIFY THE ENGINEER IMMEDIATELY OF ANY DEVIATIONS FROM PLANS PRIOR TO BEGINNING CONSTRUCTION. ANY DAMAGE TO EXISTING UTILITIES, WHETHER SHOWN ON THE PLANS OR NOT, SHALL BE THE CONTRACTOR'S RESPONSIBILITY TO REPAIR, AT HIS EXPENSE.
3. ALL CONCRETE FOR TXDOT DRAINAGE STRUCTURES SHALL MEET TXDOT SPECIFICATIONS. ALL OTHER CONCRETE SHALL BE CLASS "A" 3000 PSI CYLINDER STRENGTH IN 28 DAYS.
4. REFERENCE DRAINAGE DETAILS FOR PIPE TRENCH DETAILS, BOX CULVERT, HEADWALL, AND WINGWALL CONSTRUCTION DETAILS, AND BOX CULVERT BEDDING AND EXCAVATION LIMITS.
5. CONTRACTOR SHALL GROUT ALL CURB INLETS AND JUNCTION BOXES TO PROVIDE FOR POSITIVE DRAINAGE.
6. EARTHEN CHANNELS WILL BE VEGETATED BY SEEDING OR SODDING. 85% OF THE CHANNEL SURFACE MUST HAVE ESTABLISHED VEGETATION BEFORE THE CITY OF SAN ANTONIO WILL ACCEPT.
7. CONTRACTOR SHALL MATCH TOP OF CHANNEL TO NATURAL GROUND AND MAINTAIN A MINIMUM CHANNEL DEPTH OF "D" AS SHOWN IN THE PROFILE.

TRENCH EXCAVATION SAFETY PROTECTION:

CONTRACTOR AND/ OR CONTRACTOR'S INDEPENDENTLY RETAINED EMPLOYEE OR STRUCTURAL DESIGN/ GEOTECHNICAL/ SAFETY/EQUIPMENT CONSULTANT, IF ANY, SHALL REVIEW THESE PLANS AND ANY AVAILABLE GEOTECHNICAL INFORMATION AND THE ANTICIPATED INSTALLATION SITES WITHIN THE PROJECT WORK AREA IN ORDER TO IMPLEMENT CONTRACTOR'S TRENCH EXCAVATION SAFETY PROTECTION SYSTEMS, PROGRAMS AND /OR PROCEDURES FOR THE PROJECT DESCRIBED IN THE CONTRACT DOCUMENTS. THE CONTRACTOR'S IMPLEMENTATION OF THESE SYSTEMS, PROGRAMS AND/OR PROCEDURES SHALL PROVIDE FOR ADEQUATE TRENCH EXCAVATION SAFETY PROTECTION THAT COMPLY WITH AS A MINIMUM, OSHA STANDARDS FOR TRENCH EXCAVATIONS. SPECIFICALLY, CONTRACTOR AND/OR CONTRACTOR'S INDEPENDENTLY RETAINED EMPLOYEE OR SAFETY CONSULTANT SHALL IMPLEMENT A TRENCH SAFETY PROGRAM IN ACCORDANCE WITH OSHA STANDARDS GOVERNING THE PRESENCE AND ACTIVITIES OF INDIVIDUALS WORKING IN AND AROUND TRENCH EXCAVATION.

CAUTION!!

CONTRACTOR SHALL BE REQUIRED TO LOCATE ALL PUBLIC OR PRIVATE UTILITIES INCLUDING BUT NOT LIMITING TO: WATER, SEWER, TELEPHONE AND FIBER OPTIC LINES, SITE LIGHTING ELECTRIC, SECONDARY ELECTRIC, PRIMARY ELECTRICAL DUCTBANKS, LANDSCAPE IRRIGATION FACILITIES, AND GAS LINES. ANY UTILITY CONFLICTS THAT ARISE SHOULD BE COMMUNICATED TO THE ENGINEER IMMEDIATELY AND PRIOR TO CONSTRUCTION. THE CONTRACTOR SHALL CONTACT 1-800-DIG-TESS A MINIMUM OF 48 HOURS PRIOR TO THE START OF CONSTRUCTION. ANY DAMAGE TO EXISTING UTILITIES SHALL BE THE SOLE RESPONSIBILITY OF THE CONTRACTOR AND THE REPAIR SHALL BE AT CONTRACTOR'S SOLE EXPENSE WHETHER THE UTILITY IS SHOWN ON THESE PLANS OR NOT.

NO.	REVISION	DATE

STATE OF TEXAS
JON D. ADAME
82567
LICENSED PROFESSIONAL ENGINEER
3-30-23

PAPE-DAWSON ENGINEERS
SAN ANTONIO I AUSTIN I HOUSTON I FORT WORTH I DALLAS
2000 NW LOOP 410 I SAN ANTONIO, TX 78213 I 210.375.9000
TEXAS ENGINEERING FIRM #470 I TEXAS SURVEYING FIRM #10028800

SMILEY TRACT UNIT 1

SAN ANTONIO, TEXAS

DRAIN A STA. 19+00.00 TO 23+00.00
PLAN & PROFILE

PLAT NO. 22-11800482
JOB NO. 11100-97
DATE MARCH 2023
DESIGNER AA
CHECKED VS DRAWN AA
SHEET C1.04

Date: Mar 30, 2023, 4:59pm User ID: oatry
File: P:\111\00\97\Design\Civil\SDA1-1110097.dwg

THIS DOCUMENT HAS BEEN PRODUCED FROM MATERIAL THAT WAS STORED AND/OR TRANSMITTED ELECTRONICALLY AND MAY HAVE BEEN INADVERTENTLY ALTERED. RELY ONLY ON FINAL HARDCOPY MATERIALS BEARING THE CONSULTANT'S ORIGINAL SIGNATURE AND SEAL. AERIAL IMAGERY PROVIDED BY GOOGLE© UNLESS OTHERWISE NOTED. Imagery © 2016,CAPCOG,Digital Globe,Texas Orthoimagery Program, USDA Farm Service Agency.

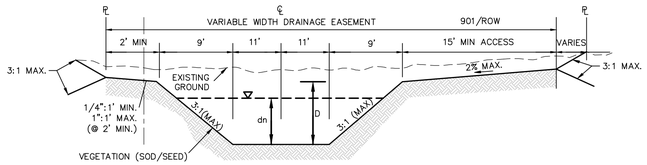

SECTION "D-D" EARTHEN TRAP. CHANNEL

NOT-TO-SCALE

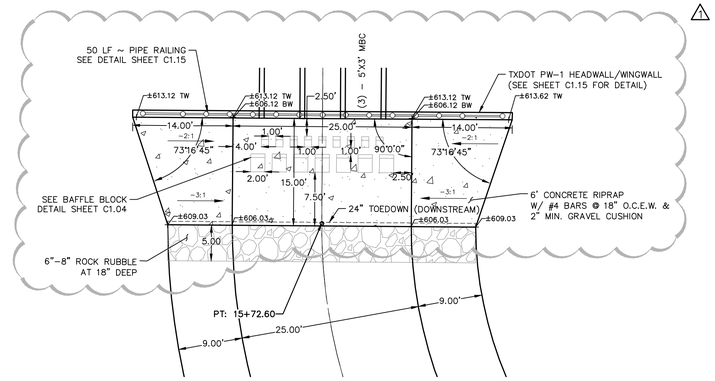

CULVERT "A-1" DOWNSTREAM HEADWALL DETAIL

SCALE: 1"=10'

DRAINAGE LEGEND

PROJECT LIMITS	
100 YR FLOODPLAIN	
EXISTING CONTOUR	690
PROPOSED CONTOUR	690
PROPOSED WATER	W
PROPOSED SEWER	SS
PROPOSED STORM DRAIN	
EXISTING STORM DRAIN	
FLOW ARROW	

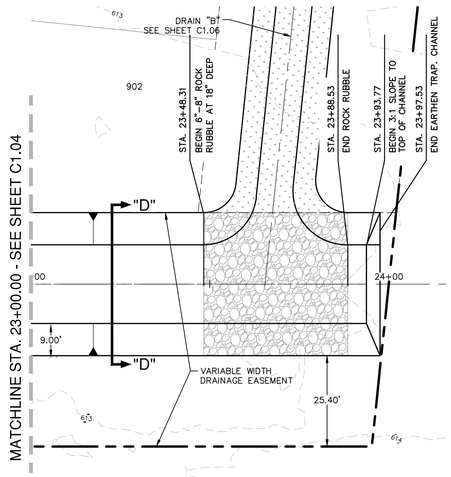

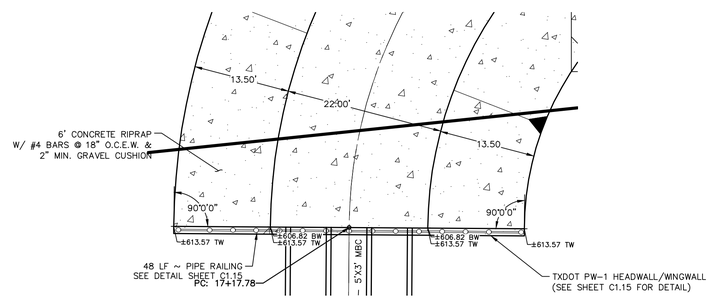

CULVERT "A-1" UPSTREAM HEADWALL DETAIL

SCALE: 1"=10'

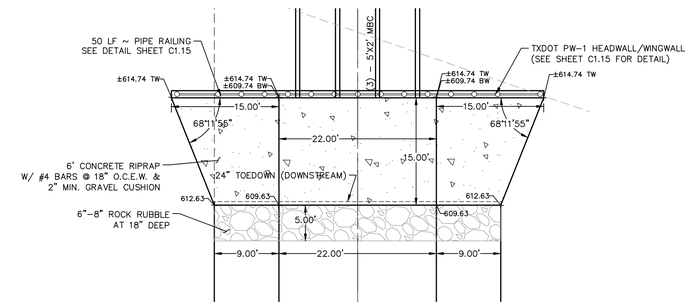

CULVERT "A-2" DOWNSTREAM HEADWALL DETAIL

SCALE: 1"=10'

DRAIN "A"
STA. 23+00.00 TO END

VERTICAL SCALE: 1" = 5'
HORIZONTAL SCALE: 1" = 20'

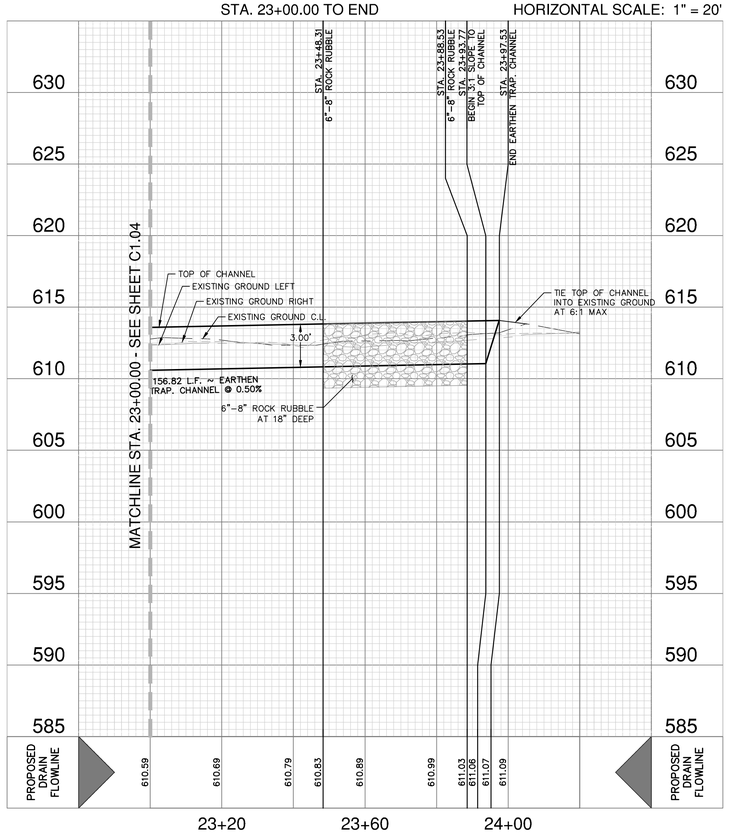

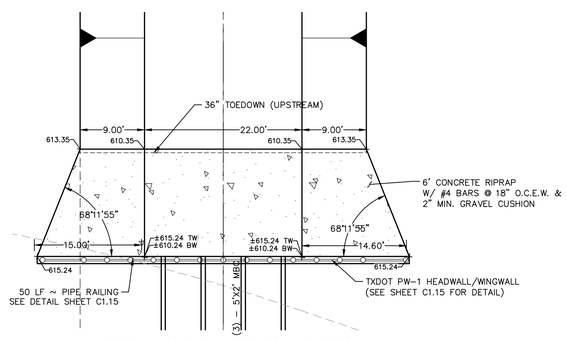

CULVERT "A-2" UPSTREAM HEADWALL DETAIL

SCALE: 1"=10'

HYDRAULIC CALCULATIONS EARTHEN CHANNEL

STA. 22+51.96 TO 23+48.31
(SECTION D-D)

Q25 = 75.10
Bw = 22'
n = 0.035
S = 0.50%
D = 3.00'
dn = 0.95'
V = 3.17 FPS

HYDRAULIC CALCULATIONS ROCK CHANNEL

STA. 23+48.31 TO 23+88.53
(SECTION D-D)

Q25 = 75.10
Bw = 22'
n = 0.040
S = 0.50%
D = 3.00'
dn = 1.03'
V = 2.91 FPS

HYDRAULIC CALCULATIONS EARTHEN CHANNEL

STA. 23+88.53 TO END
(SECTION D-D)

Q25 = 75.10
Bw = 22'
n = 0.035
S = 0.50%
D = 3.00'
dn = 0.95'
V = 3.17 FPS

DRAINAGE & GRADING NOTES:

1. A CITY OF SAN ANTONIO ROW PERMIT MUST BE OBTAINED BEFORE WORKING IN BEXAR COUNTY ROW. CONTRACTOR SHALL COORDINATE A TRAFFIC CONTROL PLAN FOR ALL WORK WITHIN THE ROW. ADDITIONAL WARNING SIGNS MAY BE RECOMMENDED BY THE ENGINEER ONCE THE ROADWAYS ARE CONSTRUCTED.
2. THE CONTRACTOR WILL BE RESPONSIBLE FOR DETERMINING EXACT LOCATION OF ALL UTILITIES AND DRAINAGE STRUCTURES WHETHER SHOWN ON THE PLANS OR NOT. THE CONTRACTOR SHALL UNCOVER EXISTING UTILITIES PRIOR TO CONSTRUCTION TO VERIFY SIZE, GRADE, AND LOCATION. THE CONTRACTOR SHALL NOTIFY THE ENGINEER IMMEDIATELY OF ANY DEVIATIONS FROM PLANS PRIOR TO BEGINNING CONSTRUCTION. ANY DAMAGE TO EXISTING UTILITIES, WHETHER SHOWN ON THE PLANS OR NOT, SHALL BE THE CONTRACTOR'S RESPONSIBILITY TO REPAIR, AT HIS EXPENSE.
3. ALL CONCRETE FOR TXDOT DRAINAGE STRUCTURES SHALL MEET TXDOT SPECIFICATIONS. ALL OTHER CONCRETE SHALL BE CLASS "A" 3000 PSI CYLINDER STRENGTH IN 28 DAYS.
4. REFERENCE DRAINAGE DETAILS FOR PIPE TRENCH DETAILS, BOX CULVERT, HEADWALL, AND WINGWALL CONSTRUCTION DETAILS, AND BOX CULVERT BEDDING AND EXCAVATION LIMITS.
5. CONTRACTOR SHALL GROUT ALL CURB INLETS AND JUNCTION BOXES TO PROVIDE FOR POSITIVE DRAINAGE.
6. EARTHEN CHANNELS WILL BE VEGETATED BY SEEDING OR SODDING. 85% OF THE CHANNEL SURFACE MUST HAVE ESTABLISHED VEGETATION BEFORE THE CITY OF SAN ANTONIO WILL ACCEPT.
7. CONTRACTOR SHALL MATCH TOP OF CHANNEL TO NATURAL GROUND AND MAINTAIN A MINIMUM CHANNEL DEPTH OF "D" AS SHOWN IN THE PROFILE.

TRENCH EXCAVATION SAFETY PROTECTION:

CONTRACTOR AND/ OR CONTRACTOR'S INDEPENDENTLY RETAINED EMPLOYEE OR STRUCTURAL DESIGN/ GEOTECHNICAL/ SAFETY/EQUIPMENT CONSULTANT, IF ANY, SHALL REVIEW THESE PLANS AND ANY AVAILABLE GEOTECHNICAL INFORMATION AND THE ANTICIPATED INSTALLATION SITES WITHIN THE PROJECT WORK AREA IN ORDER TO IMPLEMENT CONTRACTOR'S TRENCH EXCAVATION SAFETY PROTECTION SYSTEMS, PROGRAMS AND /OR PROCEDURES FOR THE PROJECT DESCRIBED IN THE CONTRACT DOCUMENTS. THE CONTRACTOR'S IMPLEMENTATION OF THESE SYSTEMS, PROGRAMS AND/OR PROCEDURES SHALL PROVIDE FOR ADEQUATE TRENCH EXCAVATION SAFETY PROTECTION THAT COMPLY WITH AS A MINIMUM, OSHA STANDARDS FOR TRENCH EXCAVATIONS. SPECIFICALLY, CONTRACTOR AND/OR CONTRACTOR'S INDEPENDENTLY RETAINED EMPLOYEE OR SAFETY CONSULTANT SHALL IMPLEMENT A TRENCH SAFETY PROGRAM IN ACCORDANCE WITH OSHA STANDARDS GOVERNING THE PRESENCE AND ACTIVITIES OF INDIVIDUALS WORKING IN AND AROUND TRENCH EXCAVATION.

CAUTION!!

CONTRACTOR SHALL BE REQUIRED TO LOCATE ALL PUBLIC OR PRIVATE UTILITIES INCLUDING BUT NOT LIMITING TO: WATER, SEWER, TELEPHONE AND FIBER OPTIC LINES, SITE LIGHTING ELECTRIC, SECONDARY ELECTRIC, PRIMARY ELECTRICAL DUCTBANKS, LANDSCAPE IRRIGATION FACILITIES, AND GAS LINES. ANY UTILITY CONFLICTS THAT ARISE SHOULD BE COMMUNICATED TO THE ENGINEER IMMEDIATELY AND PRIOR TO CONSTRUCTION. THE CONTRACTOR SHALL CONTACT 1-800-DIG-TESS A MINIMUM OF 48 HOURS PRIOR TO THE START OF CONSTRUCTION. ANY DAMAGE TO EXISTING UTILITIES SHALL BE THE SOLE RESPONSIBILITY OF THE CONTRACTOR AND THE REPAIR SHALL BE AT CONTRACTOR'S SOLE EXPENSE WHETHER THE UTILITY IS SHOWN ON THESE PLANS OR NOT.

NO.	REVISION	DATE
1	HEADWALL HEIGHT REVISED	12/11/23

STATE OF TEXAS
JON D. ADAME
82567
LICENSED
PROFESSIONAL ENGINEER
12-11-13

PAPE-DAWSON ENGINEERS
SAN ANTONIO I AUSTIN I HOUSTON I FORT WORTH I DALLAS
2000 NW LOOP 410 I SAN ANTONIO, TX 78213 I 210.375.9000
TEXAS ENGINEERING FIRM #470 I TEXAS SURVEYING FIRM #10028800

SMILEY TRACT UNIT 1

SAN ANTONIO, TEXAS

DRAIN A STA. 23+00.00 TO END
PLAN & PROFILE

PLAT NO. 22-11800482
JOB NO. 11100-97
DATE AUGUST 2023
DESIGNER AA
CHECKED VS DRAWN AA
SHEET C1.05

Date: Dec 11, 2023, 3:23pm User ID: ostry
File: P:\111\00\97\Design\Civil\SDA1-1110097.dwg

THIS DOCUMENT HAS BEEN PRODUCED FROM MATERIAL THAT WAS STORED AND/OR TRANSMITTED ELECTRONICALLY AND MAY HAVE BEEN INADVERTENTLY ALTERED. RELY ONLY ON FINAL HARDCOPY MATERIALS BEARING THE CONSULTANT'S ORIGINAL SIGNATURE AND SEAL. AERIAL IMAGERY PROVIDED BY GOOGLE© UNLESS OTHERWISE NOTED. Imagery © 2016,CAPCOG,Digital Globe,Texas Orthoimagery Program, USDA Farm Service Agency.

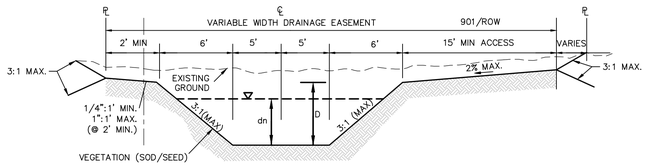

SECTION "A-A" EARTHEN TRAP. CHANNEL

NOT-TO-SCALE

HYDRAULIC CALCULATIONS EARTHEN CHANNEL STA. 1+11.06 TO 3+40.90 (SECTION A-A)	HYDRAULIC CALCULATIONS ROCK CHANNEL STA. 3+40.90 TO 3+45.90 (SECTION A-A)	HYDRAULIC CALCULATIONS CONCRETE CHANNEL STA. 3+45.90 TO 3+60.90 (SECTION A-A)	HYDRAULIC CALCULATIONS CONCRETE CHANNEL STA. 4+12.90 TO 4+27.90 (SECTION A-A)	HYDRAULIC CALCULATIONS EARTHEN CHANNEL STA. 4+27.90 TO 4+63.89 (SECTION A-A)	HYDRAULIC CALCULATIONS EARTHEN CHANNEL STA. 4+63.89 TO 5+15.02 (SECTION A-A)
Q25 = 73.60	Q25 = 73.60	Q25 = 73.60	Q25 = 72.90	Q25 = 72.90	Q25 = 72.90
Bw = 10'	Bw = 10'	Bw = 10'	Bw = 10'	Bw = 10'	Bw = 10'
n = 0.035	n = 0.040	n = 0.013	n = 0.013	n = 0.035	n = 0.035
S = 3.43%	S = 3.43%	S = 3.43%	S = 1.61%	S = 1.61%	S = 2.50%
D = 2.00'	D = 2.00'	D = 2.00'	D = 2.00'	D = 2.00'	D = 2.00'
dn = 0.91'	dn = 0.98'	dn = 0.52'	dn = 0.63'	dn = 1.12'	dn = 0.98'
V = 6.37 FPS	V = 5.81 FPS	V = 12.36 FPS	V = 9.62 FPS	V = 4.90 FPS	V = 5.72 FPS

SCALE: 1"= 20'

0' 20' 40' 60'

DRAINAGE LEGEND

- PROJECT LIMITS
- 100 YR FLOODPLAIN
- EXISTING CONTOUR (690)
- PROPOSED CONTOUR (690)
- PROPOSED WATER (W)
- PROPOSED SEWER (SS)
- PROPOSED STORM DRAIN
- EXISTING STORM DRAIN
- FLOW ARROW

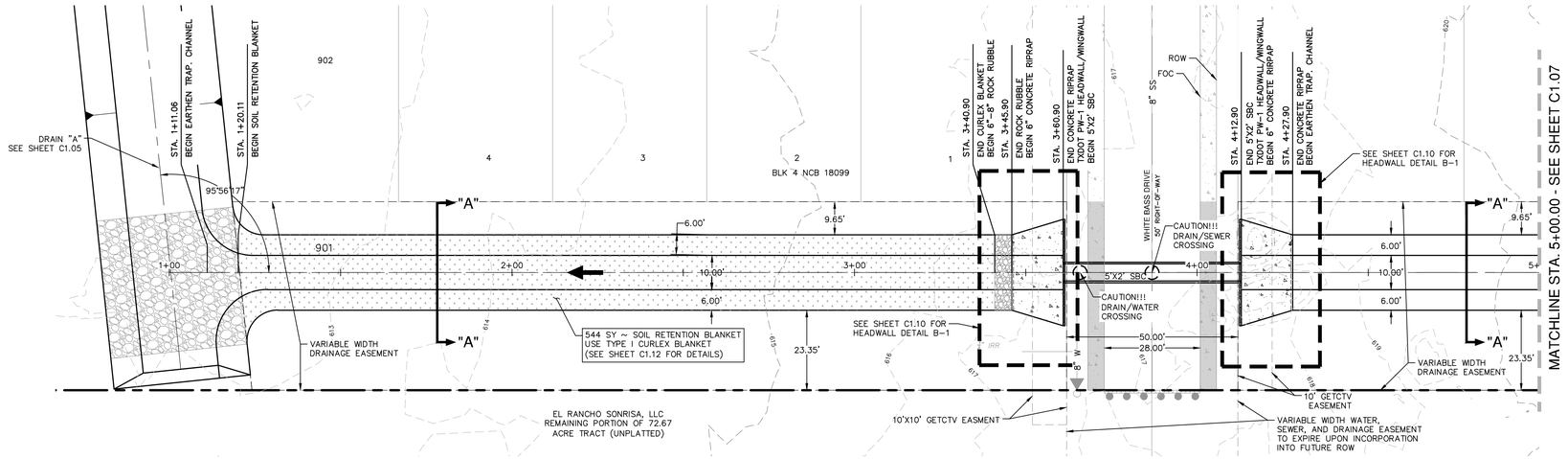

DRAIN "B"
STA. 1+00.00 TO 5+00.00

VERTICAL SCALE: 1" = 5'
HORIZONTAL SCALE: 1" = 20'

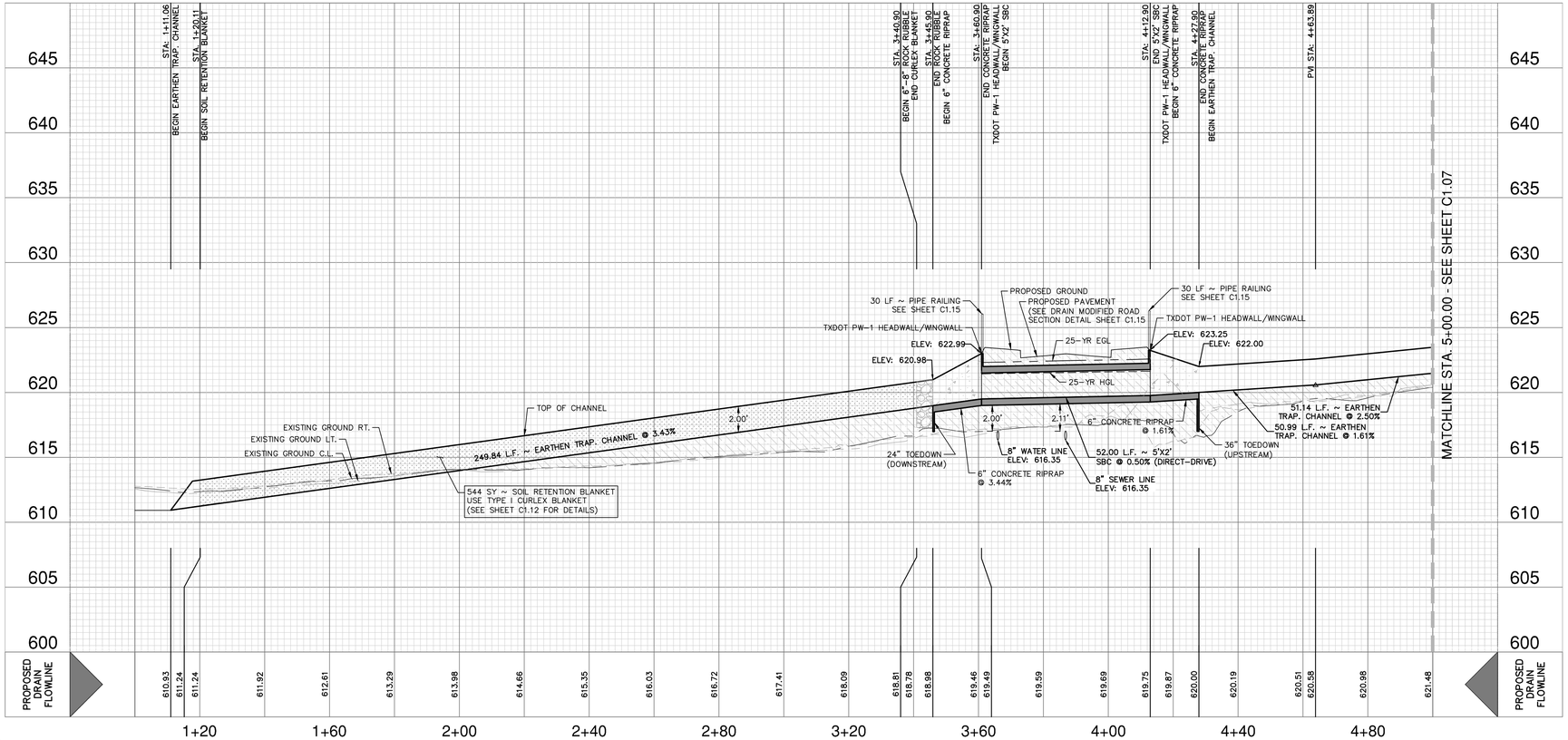

DRAINAGE & GRADING NOTES:

1. A CITY OF SAN ANTONIO ROW PERMIT MUST BE OBTAINED BEFORE WORKING IN BEXAR COUNTY ROW. CONTRACTOR SHALL COORDINATE A TRAFFIC CONTROL PLAN FOR ALL WORK WITHIN THE ROW. ADDITIONAL WARNING SIGNS MAY BE RECOMMENDED BY THE ENGINEER ONCE THE ROADWAYS ARE CONSTRUCTED.
2. THE CONTRACTOR WILL BE RESPONSIBLE FOR DETERMINING EXACT LOCATION OF ALL UTILITIES AND DRAINAGE STRUCTURES WHETHER SHOWN ON THE PLANS OR NOT. THE CONTRACTOR SHALL UNCOVER EXISTING UTILITIES PRIOR TO CONSTRUCTION TO VERIFY SIZE, GRADE, AND LOCATION. THE CONTRACTOR SHALL NOTIFY THE ENGINEER IMMEDIATELY OF ANY DEVIATIONS FROM PLANS PRIOR TO BEGINNING CONSTRUCTION. ANY DAMAGE TO EXISTING UTILITIES, WHETHER SHOWN ON THE PLANS OR NOT, SHALL BE THE CONTRACTOR'S RESPONSIBILITY TO REPAIR, AT HIS EXPENSE.
3. ALL CONCRETE FOR TXDOT DRAINAGE STRUCTURES SHALL MEET TXDOT SPECIFICATIONS. ALL OTHER CONCRETE SHALL BE CLASS "A" 3000 PSI CYLINDER STRENGTH IN 28 DAYS.
4. REFERENCE DRAINAGE DETAILS FOR PIPE TRENCH DETAILS, BOX CULVERT, HEADWALL, AND WINGWALL CONSTRUCTION DETAILS, AND BOX CULVERT BEDDING AND EXCAVATION LIMITS.
5. CONTRACTOR SHALL GROUT ALL CURB INLETS AND JUNCTION BOXES TO PROVIDE FOR POSITIVE DRAINAGE.
6. EARTHEN CHANNELS WILL BE VEGETATED BY SEEDING OR SODDING. 85% OF THE CHANNEL SURFACE MUST HAVE ESTABLISHED VEGETATION BEFORE THE CITY OF SAN ANTONIO WILL ACCEPT.
7. CONTRACTOR SHALL MATCH TOP OF CHANNEL TO NATURAL GROUND AND MAINTAIN A MINIMUM CHANNEL DEPTH OF "D" AS SHOWN IN THE PROFILE.

TRENCH EXCAVATION SAFETY PROTECTION:

CONTRACTOR AND/ OR CONTRACTOR'S INDEPENDENTLY RETAINED EMPLOYEE OR STRUCTURAL DESIGN/ GEOTECHNICAL/ SAFETY/EQUIPMENT CONSULTANT, IF ANY, SHALL REVIEW THESE PLANS AND ANY AVAILABLE GEOTECHNICAL INFORMATION AND THE ANTICIPATED INSTALLATION SITES WITHIN THE PROJECT WORK AREA IN ORDER TO IMPLEMENT CONTRACTOR'S TRENCH EXCAVATION SAFETY PROTECTION SYSTEMS, PROGRAMS AND /OR PROCEDURES FOR THE PROJECT DESCRIBED IN THE CONTRACT DOCUMENTS. THE CONTRACTOR'S IMPLEMENTATION OF THESE SYSTEMS, PROGRAMS AND/OR PROCEDURES SHALL PROVIDE FOR ADEQUATE TRENCH EXCAVATION SAFETY PROTECTION THAT COMPLY WITH AS A MINIMUM, OSHA STANDARDS FOR TRENCH EXCAVATIONS. SPECIFICALLY, CONTRACTOR AND/OR CONTRACTOR'S INDEPENDENTLY RETAINED EMPLOYEE OR SAFETY CONSULTANT SHALL IMPLEMENT A TRENCH SAFETY PROGRAM IN ACCORDANCE WITH OSHA STANDARDS GOVERNING THE PRESENCE AND ACTIVITIES OF INDIVIDUALS WORKING IN AND AROUND TRENCH EXCAVATION.

CAUTION!!

CONTRACTOR SHALL BE REQUIRED TO LOCATE ALL PUBLIC OR PRIVATE UTILITIES INCLUDING BUT NOT LIMITING TO: WATER, SEWER, TELEPHONE AND FIBER OPTIC LINES, SITE LIGHTING ELECTRIC, SECONDARY ELECTRIC, PRIMARY ELECTRICAL DUCTBANKS, LANDSCAPE IRRIGATION FACILITIES, AND GAS LINES. ANY UTILITY CONFLICTS THAT ARISE SHOULD BE COMMUNICATED TO THE ENGINEER IMMEDIATELY AND PRIOR TO CONSTRUCTION. THE CONTRACTOR SHALL CONTACT 1-800-DIG-TESS A MINIMUM OF 48 HOURS PRIOR TO THE START OF CONSTRUCTION. ANY DAMAGE TO EXISTING UTILITIES SHALL BE THE SOLE RESPONSIBILITY OF THE CONTRACTOR AND THE REPAIR SHALL BE AT CONTRACTOR'S SOLE EXPENSE WHETHER THE UTILITY IS SHOWN ON THESE PLANS OR NOT.

NO.	REVISION	DATE

STATE OF TEXAS
JON D. ADAME
82567
LICENSED PROFESSIONAL ENGINEER
3-30-23

PAPE-DAWSON ENGINEERS
SAN ANTONIO I AUSTIN I HOUSTON I FORT WORTH I DALLAS
2000 NW LOOP 410 I SAN ANTONIO, TX 78213 I 210.375.9000
TEXAS ENGINEERING FIRM #470 I TEXAS SURVEYING FIRM #10028800

SMILEY TRACT UNIT 1

SAN ANTONIO, TEXAS

DRAIN B STA. 1+00.00 TO 5+00.00
PLAN & PROFILE

PLAT NO.	22-11800482
JOB NO.	11100-97
DATE	MARCH 2023
DESIGNER	AA
CHECKED VS	DRAWN AA
SHEET	C1.06

Date: Mar 30, 2023, 5:00am User ID: aatry
File: P:\11\00\97\Design\Civil\SDB1-1110097.dwg
THIS DOCUMENT HAS BEEN PRODUCED FROM MATERIAL THAT WAS STORED AND/OR TRANSMITTED ELECTRONICALLY AND MAY HAVE BEEN INADVERTENTLY ALTERED. RELY ONLY ON FINAL HARDCOPY MATERIALS BEARING THE CONSULTANT'S ORIGINAL SIGNATURE AND SEAL. AERIAL IMAGERY PROVIDED BY GOOGLE© UNLESS OTHERWISE NOTED. Imagery © 2016,CAPCOG,Digital Globe,Texas Orthoimagery Program, USDA Farm Service Agency.

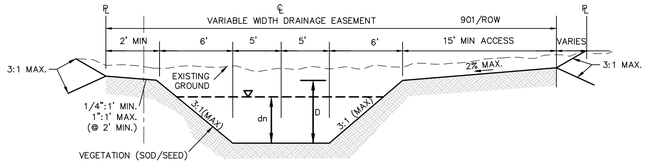

SECTION "A-A" EARTHEN TRAP. CHANNEL

NOT–TO–SCALE

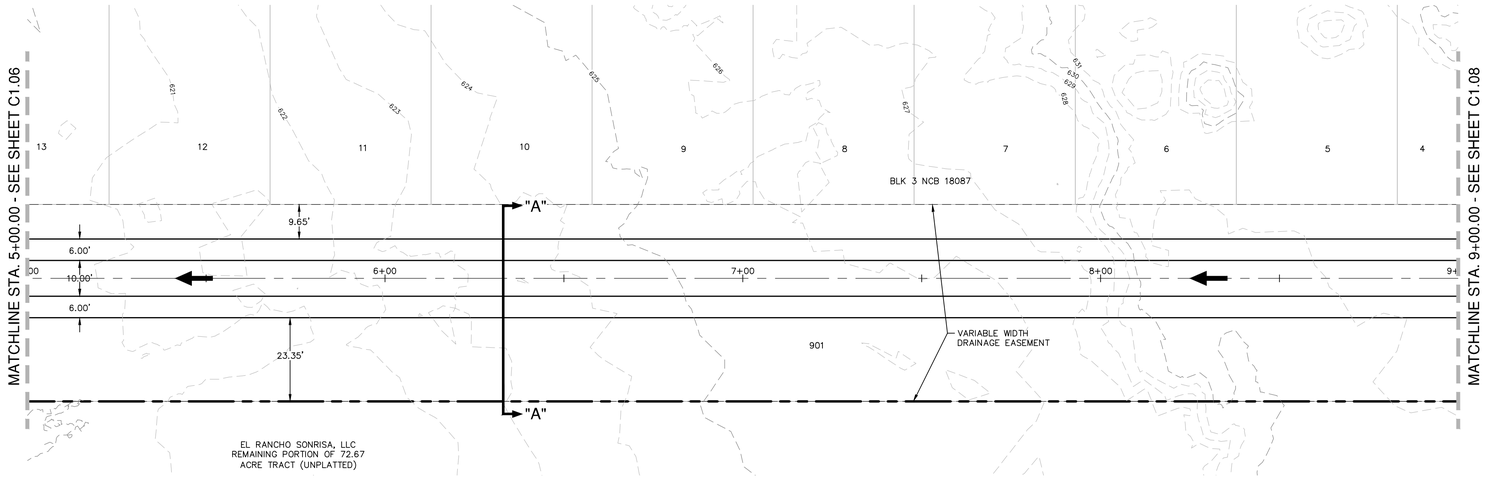

DRAIN "B"
STA. 5+00.00 TO 9+00.00

VERTICAL SCALE: 1" = 5'
HORIZONTAL SCALE: 1" = 20'

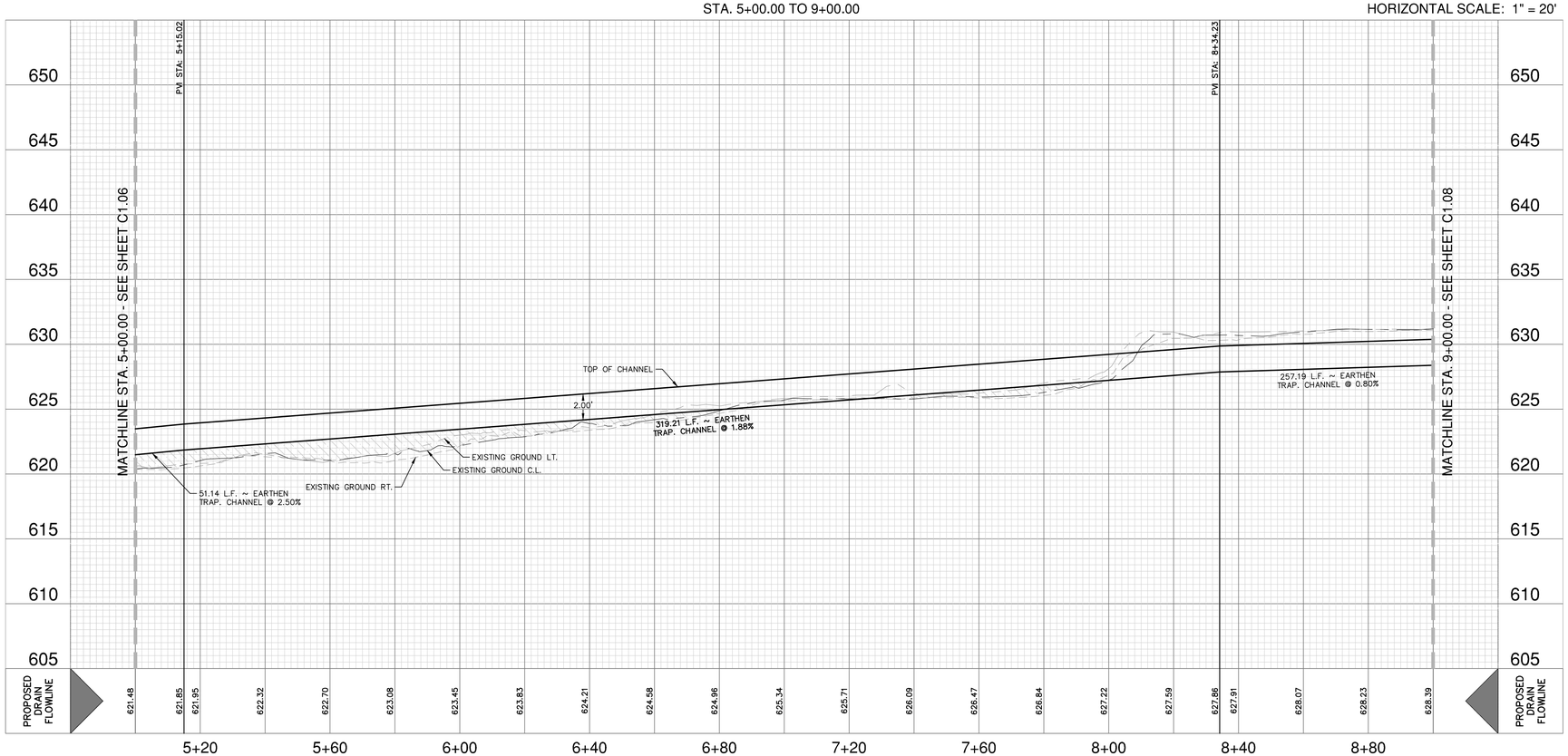

SCALE: 1"= 20'
0' 20' 40' 60'

DRAINAGE LEGEND

- PROJECT LIMITS
- 100 YR FLOODPLAIN
- EXISTING CONTOUR (690)
- PROPOSED CONTOUR (690)
- PROPOSED WATER (W)
- PROPOSED SEWER (SS)
- PROPOSED STORM DRAIN
- EXISTING STORM DRAIN
- FLOW ARROW

HYDRAULIC CALCULATIONS EARTHEN CHANNEL STA. 4+63.89 TO 5+15.02 (SECTION A–A)	HYDRAULIC CALCULATIONS EARTHEN CHANNEL STA. 5+15.02 TO 8+34.23 (SECTION A–A)	HYDRAULIC CALCULATIONS EARTHEN CHANNEL STA. 8+34.23 TO 10+71.43 (SECTION A–A)
Q25 = 72.90	Q25 = 72.90	Q25 = 72.90
Bw = 10'	Bw = 10'	Bw = 10'
n = 0.035	n = 0.035	n = 0.035
S = 2.50%	S = 1.88%	S = 0.80%
D = 2.00'	D = 2.00'	D = 2.00'
dn = 0.98'	dn = 1.07'	dn = 1.35'
V = 5.72 FPS	V = 5.20 FPS	V = 3.85 FPS

DRAINAGE & GRADING NOTES:

1. A CITY OF SAN ANTONIO ROW PERMIT MUST BE OBTAINED BEFORE WORKING IN BEXAR COUNTY ROW. CONTRACTOR SHALL COORDINATE A TRAFFIC CONTROL PLAN FOR ALL WORK WITHIN THE ROW. ADDITIONAL WARNING SIGNS MAY BE RECOMMENDED BY THE ENGINEER ONCE THE ROADWAYS ARE CONSTRUCTED.
2. THE CONTRACTOR WILL BE RESPONSIBLE FOR DETERMINING EXACT LOCATION OF ALL UTILITIES AND DRAINAGE STRUCTURES WHETHER SHOWN ON THE PLANS OR NOT. THE CONTRACTOR SHALL UNCOVER EXISTING UTILITIES PRIOR TO CONSTRUCTION TO VERIFY SIZE, GRADE, AND LOCATION. THE CONTRACTOR SHALL NOTIFY THE ENGINEER IMMEDIATELY OF ANY DEVIATIONS FROM PLANS PRIOR TO BEGINNING CONSTRUCTION. ANY DAMAGE TO EXISTING UTILITIES, WHETHER SHOWN ON THE PLANS OR NOT, SHALL BE THE CONTRACTOR'S RESPONSIBILITY TO REPAIR, AT HIS EXPENSE.
3. ALL CONCRETE FOR TXDOT DRAINAGE STRUCTURES SHALL MEET TXDOT SPECIFICATIONS. ALL OTHER CONCRETE SHALL BE CLASS "A" 3000 PSI CYLINDER STRENGTH IN 28 DAYS.
4. REFERENCE DRAINAGE DETAILS FOR PIPE TRENCH DETAILS, BOX CULVERT, HEADWALL, AND WINGWALL CONSTRUCTION DETAILS, AND BOX CULVERT BEDDING AND EXCAVATION LIMITS.
5. CONTRACTOR SHALL GROUT ALL CURB INLETS AND JUNCTION BOXES TO PROVIDE FOR POSITIVE DRAINAGE.
6. EARTHEN CHANNELS WILL BE VEGETATED BY SEEDING OR SODDING. 85% OF THE CHANNEL SURFACE MUST HAVE ESTABLISHED VEGETATION BEFORE THE CITY OF SAN ANTONIO WILL ACCEPT.
7. CONTRACTOR SHALL MATCH TOP OF CHANNEL TO NATURAL GROUND AND MAINTAIN A MINIMUM CHANNEL DEPTH OF "D" AS SHOWN IN THE PROFILE.

TRENCH EXCAVATION SAFETY PROTECTION:

CONTRACTOR AND/ OR CONTRACTOR'S INDEPENDENTLY RETAINED EMPLOYEE OR STRUCTURAL DESIGN/ GEOTECHNICAL/ SAFETY/EQUIPMENT CONSULTANT, IF ANY, SHALL REVIEW THESE PLANS AND ANY AVAILABLE GEOTECHNICAL INFORMATION AND THE ANTICIPATED INSTALLATION SITES WITHIN THE PROJECT WORK AREA IN ORDER TO IMPLEMENT CONTRACTOR'S TRENCH EXCAVATION SAFETY PROTECTION SYSTEMS, PROGRAMS AND /OR PROCEDURES FOR THE PROJECT DESCRIBED IN THE CONTRACT DOCUMENTS. THE CONTRACTOR'S IMPLEMENTATION OF THESE SYSTEMS, PROGRAMS AND/OR PROCEDURES SHALL PROVIDE FOR ADEQUATE TRENCH EXCAVATION SAFETY PROTECTION THAT COMPLY WITH AS A MINIMUM, OSHA STANDARDS FOR TRENCH EXCAVATIONS. SPECIFICALLY, CONTRACTOR AND/OR CONTRACTOR'S INDEPENDENTLY RETAINED EMPLOYEE OR SAFETY CONSULTANT SHALL IMPLEMENT A TRENCH SAFETY PROGRAM IN ACCORDANCE WITH OSHA STANDARDS GOVERNING THE PRESENCE AND ACTIVITIES OF INDIVIDUALS WORKING IN AND AROUND TRENCH EXCAVATION.

CAUTION!!

CONTRACTOR SHALL BE REQUIRED TO LOCATE ALL PUBLIC OR PRIVATE UTILITIES INCLUDING BUT NOT LIMITING TO: WATER, SEWER, TELEPHONE AND FIBER OPTIC LINES, SITE LIGHTING ELECTRIC, SECONDARY ELECTRIC, PRIMARY ELECTRICAL DUCTBANKS, LANDSCAPE IRRIGATION FACILITIES, AND GAS LINES. ANY UTILITY CONFLICTS THAT ARISE SHOULD BE COMMUNICATED TO THE ENGINEER IMMEDIATELY AND PRIOR TO CONSTRUCTION. THE CONTRACTOR SHALL CONTACT 1–800–DIG–TESS A MINIMUM OF 48 HOURS PRIOR TO THE START OF CONSTRUCTION. ANY DAMAGE TO EXISTING UTILITIES SHALL BE THE SOLE RESPONSIBILITY OF THE CONTRACTOR AND THE REPAIR SHALL BE AT CONTRACTOR'S SOLE EXPENSE WHETHER THE UTILITY IS SHOWN ON THESE PLANS OR NOT.

NO.	REVISION	DATE

STATE OF TEXAS
JON D. ADAME
82567
LICENSED PROFESSIONAL ENGINEER
3-30-23

PAPE-DAWSON ENGINEERS
SAN ANTONIO I AUSTIN I HOUSTON I FORT WORTH I DALLAS
2000 NW LOOP 410 I SAN ANTONIO, TX 78213 I 210.375.9000
TEXAS ENGINEERING FIRM #470 I TEXAS SURVEYING FIRM #10028800

SMILEY TRACT UNIT 1

SAN ANTONIO, TEXAS

DRAIN B STA. 5+00.00 TO 9+00.00
PLAN & PROFILE

PLAT NO. 22-11800482
JOB NO. 11100–97
DATE MARCH 2023
DESIGNER AA
CHECKED VS DRAWN AA
SHEET C1.07

Date: Mar 30, 2023, 5:00pm User ID: aatry
File: P:\111\00\97\Design\Civil\SDB1–1100097.dwg

THIS DOCUMENT HAS BEEN PRODUCED FROM MATERIAL THAT WAS STORED AND/OR TRANSMITTED ELECTRONICALLY AND MAY HAVE BEEN INADVERTENTLY ALTERED. RELY ONLY ON FINAL HARDCOPY MATERIALS BEARING THE CONSULTANT'S ORIGINAL SIGNATURE AND SEAL. AERIAL IMAGERY PROVIDED BY GOOGLE© UNLESS OTHERWISE NOTED. Imagery © 2016,CAPCOG,Digital Globe,Texas Orthoimagery Program, USDA Farm Service Agency.

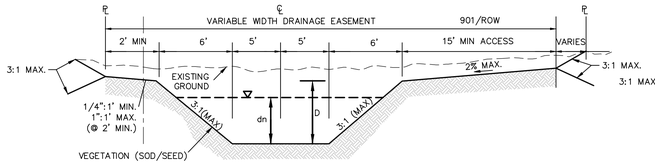

SECTION "A-A" EARTHEN TRAP. CHANNEL

NOT-TO-SCALE

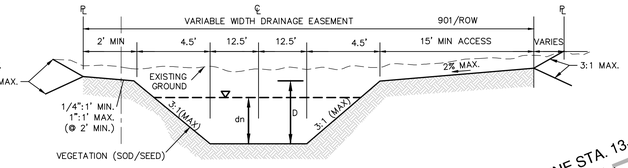

SECTION "B-B" EARTHEN TRAP. CHANNEL

NOT-TO-SCALE

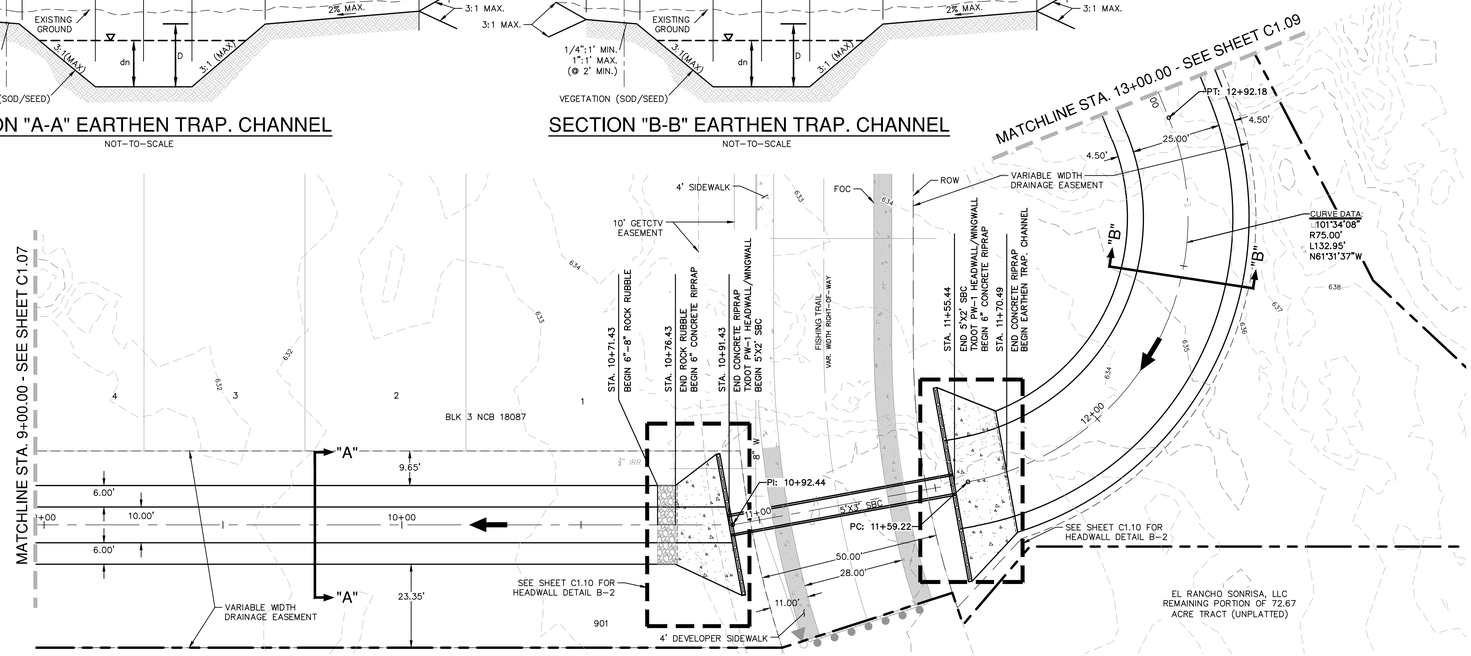

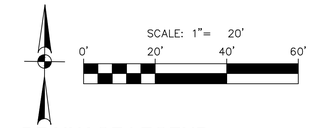

DRAINAGE LEGEND

- PROJECT LIMITS
- 100 YR FLOODPLAIN
- EXISTING CONTOUR (690)
- PROPOSED CONTOUR (690)
- PROPOSED WATER (W)
- PROPOSED SEWER (SS)
- PROPOSED STORM DRAIN
- EXISTING STORM DRAIN
- FLOW ARROW

HYDRAULIC CALCULATIONS EARTHEN CHANNEL STA. 8+34.23 TO 10+71.43 (SECTION A-A)	HYDRAULIC CALCULATIONS ROCK CHANNEL STA. 10+71.43 TO 10+76.43 (SECTION A-A)	HYDRAULIC CALCULATIONS CONCRETE CHANNEL STA. 10+76.43 TO 10+91.43 (SECTION A-A)
Q25 = 72.90	Q25 = 72.90	Q25 = 72.90
Bw = 10'	Bw = 10'	Bw = 10'
n = 0.035	n = 0.040	n = 0.013
S = 0.80%	S = 0.80%	S = 0.80%
D = 2.00'	D = 2.00'	D = 2.00' (MIN.)
dn = 1.35'	dn = 1.45'	dn = 0.78'
V = 3.85 FPS	V = 3.51 FPS	V = 7.61 FPS

HYDRAULIC CALCULATIONS CONCRETE CHANNEL STA. 11+55.44 TO 11+70.49 (SECTION B-B)	HYDRAULIC CALCULATIONS EARTHEN CHANNEL STA. 11+70.49 TO 13+95.45 (SECTION B-B)
Q25 = 72.50	Q25 = 72.50
Bw = 25'	Bw = 25'
n = 0.013	n = 0.035
S = 0.60%	S = 0.60%
D = 1.50' (MIN.)	D = 1.50'
dn = 0.51'	dn = 0.91'
V = 5.40 FPS	V = 2.88 FPS

DRAIN "B"
STA. 9+00.00 TO 13+00.00

VERTICAL SCALE: 1" = 5'
HORIZONTAL SCALE: 1" = 20'

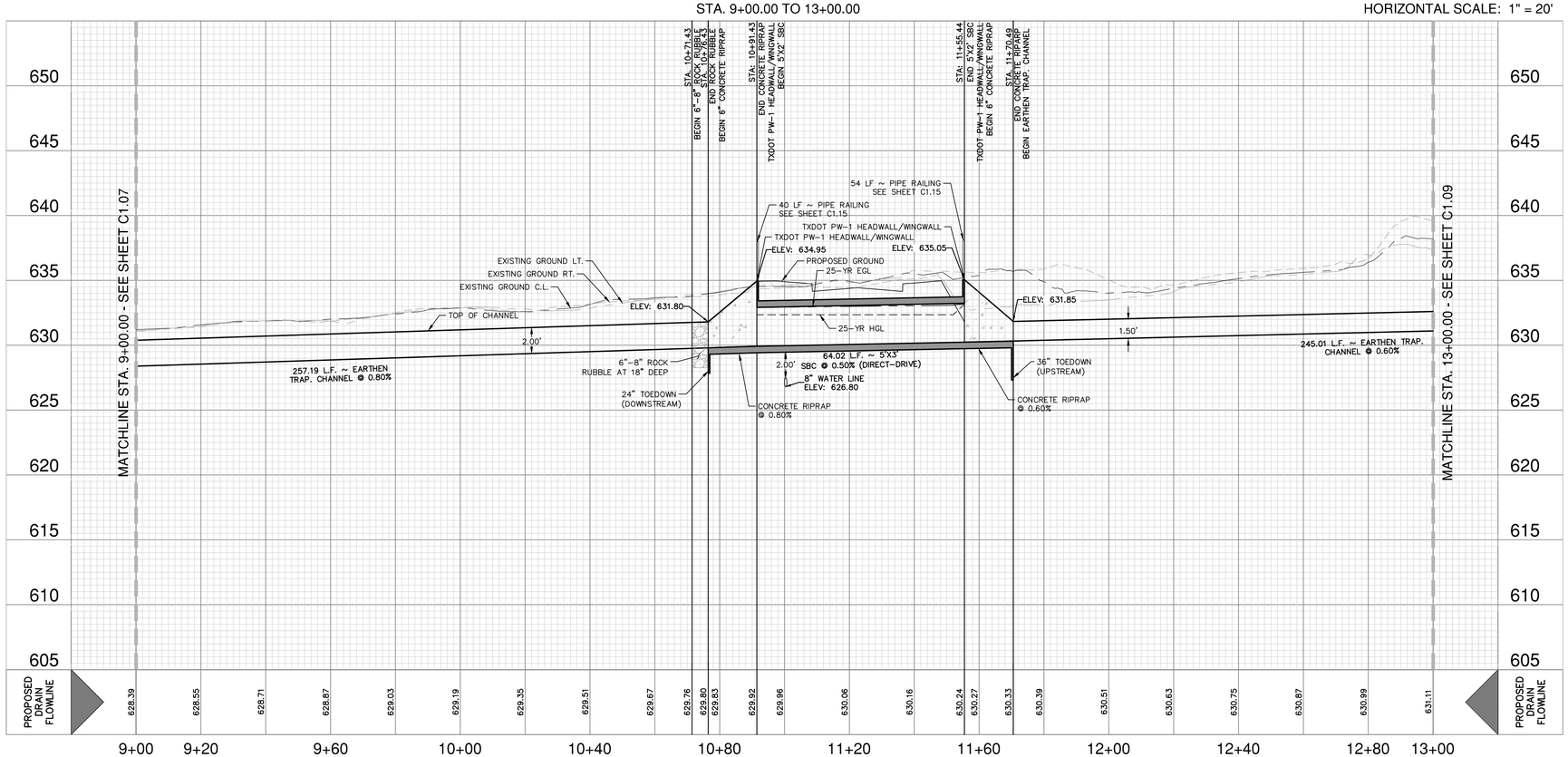

DRAINAGE & GRADING NOTES:

1. A CITY OF SAN ANTONIO ROW PERMIT MUST BE OBTAINED BEFORE WORKING IN BEXAR COUNTY ROW. CONTRACTOR SHALL COORDINATE A TRAFFIC CONTROL PLAN FOR ALL WORK WITHIN THE ROW. ADDITIONAL WARNING SIGNS MAY BE RECOMMENDED BY THE ENGINEER ONCE THE ROADWAYS ARE CONSTRUCTED.
2. THE CONTRACTOR WILL BE RESPONSIBLE FOR DETERMINING EXACT LOCATION OF ALL UTILITIES AND DRAINAGE STRUCTURES WHETHER SHOWN ON THE PLANS OR NOT. THE CONTRACTOR SHALL UNCOVER EXISTING UTILITIES PRIOR TO CONSTRUCTION TO VERIFY SIZE, GRADE, AND LOCATION. THE CONTRACTOR SHALL NOTIFY THE ENGINEER IMMEDIATELY OF ANY DEVIATIONS FROM PLANS PRIOR TO BEGINNING CONSTRUCTION. ANY DAMAGE TO EXISTING UTILITIES, WHETHER SHOWN ON THE PLANS OR NOT, SHALL BE THE CONTRACTOR'S RESPONSIBILITY TO REPAIR, AT HIS EXPENSE.
3. ALL CONCRETE FOR TXDOT DRAINAGE STRUCTURES SHALL MEET TXDOT SPECIFICATIONS. ALL OTHER CONCRETE SHALL BE CLASS "A" 3000 PSI CYLINDER STRENGTH IN 28 DAYS.
4. REFERENCE DRAINAGE DETAILS FOR PIPE TRENCH DETAILS, BOX CULVERT, HEADWALL, AND WINGWALL CONSTRUCTION DETAILS, AND BOX CULVERT BEDDING AND EXCAVATION LIMITS.
5. CONTRACTOR SHALL GROUT ALL CURB INLETS AND JUNCTION BOXES TO PROVIDE FOR POSITIVE DRAINAGE.
6. EARTHEN CHANNELS WILL BE VEGETATED BY SEEDING OR SODDING. 85% OF THE CHANNEL SURFACE MUST HAVE ESTABLISHED VEGETATION BEFORE THE CITY OF SAN ANTONIO WILL ACCEPT.
7. CONTRACTOR SHALL MATCH TOP OF CHANNEL TO NATURAL GROUND AND MAINTAIN A MINIMUM CHANNEL DEPTH OF "D" AS SHOWN IN THE PROFILE.

TRENCH EXCAVATION SAFETY PROTECTION:

CONTRACTOR AND/ OR CONTRACTOR'S INDEPENDENTLY RETAINED EMPLOYEE OR STRUCTURAL DESIGN/ GEOTECHNICAL/ SAFETY/EQUIPMENT CONSULTANT, IF ANY, SHALL REVIEW THESE PLANS AND ANY AVAILABLE GEOTECHNICAL INFORMATION AND THE ANTICIPATED INSTALLATION SITES WITHIN THE PROJECT WORK AREA IN ORDER TO IMPLEMENT CONTRACTOR'S TRENCH EXCAVATION SAFETY PROTECTION SYSTEMS, PROGRAMS AND /OR PROCEDURES FOR THE PROJECT DESCRIBED IN THE CONTRACT DOCUMENTS. THE CONTRACTOR'S IMPLEMENTATION OF THESE SYSTEMS, PROGRAMS AND/OR PROCEDURES SHALL PROVIDE FOR ADEQUATE TRENCH EXCAVATION SAFETY PROTECTION THAT COMPLY WITH AS A MINIMUM, OSHA STANDARDS FOR TRENCH EXCAVATIONS. SPECIFICALLY, CONTRACTOR AND/OR CONTRACTOR'S INDEPENDENTLY RETAINED EMPLOYEE OR SAFETY CONSULTANT SHALL IMPLEMENT A TRENCH SAFETY PROGRAM IN ACCORDANCE WITH OSHA STANDARDS GOVERNING THE PRESENCE AND ACTIVITIES OF INDIVIDUALS WORKING IN AND AROUND TRENCH EXCAVATION.

CAUTION!!

CONTRACTOR SHALL BE REQUIRED TO LOCATE ALL PUBLIC OR PRIVATE UTILITIES INCLUDING BUT NOT LIMITING TO: WATER, SEWER, TELEPHONE AND FIBER OPTIC LINES, SITE LIGHTING ELECTRIC, SECONDARY ELECTRIC, PRIMARY ELECTRICAL DUCTBANKS, LANDSCAPE IRRIGATION FACILITIES, AND GAS LINES. ANY UTILITY CONFLICTS THAT ARISE SHOULD BE COMMUNICATED TO THE ENGINEER IMMEDIATELY AND PRIOR TO CONSTRUCTION. THE CONTRACTOR SHALL CONTACT 1-800-DIG-TESS A MINIMUM OF 48 HOURS PRIOR TO THE START OF CONSTRUCTION. ANY DAMAGE TO EXISTING UTILITIES SHALL BE THE SOLE RESPONSIBILITY OF THE CONTRACTOR AND THE REPAIR SHALL BE AT CONTRACTOR'S SOLE EXPENSE WHETHER THE UTILITY IS SHOWN ON THESE PLANS OR NOT.

NO.	REVISION	DATE

STATE OF TEXAS
JON D. ADAME
82567
LICENSED PROFESSIONAL ENGINEER
3-30-23

PAPE-DAWSON ENGINEERS
SAN ANTONIO I AUSTIN I HOUSTON I FORT WORTH I DALLAS
2000 NW LOOP 410 I SAN ANTONIO, TX 78213 I 210.375.9000
TEXAS ENGINEERING FIRM #470 I TEXAS SURVEYING FIRM #10028800

SMILEY TRACT UNIT 1

SAN ANTONIO, TEXAS

DRAIN B STA. 9+00.00 TO 13+00.00
PLAN & PROFILE

PLAT NO. 22-11800482
JOB NO. 11100-97
DATE MARCH 2023
DESIGNER AA
CHECKED VS DRAWN AA
SHEET C1.08

Date: Mar 30, 2023, 5:00pm User ID: aatry
File: P:\111\00\97\Design\Civil\SDB1-1110097.dwg

THIS DOCUMENT HAS BEEN PRODUCED FROM MATERIAL THAT WAS STORED AND/OR TRANSMITTED ELECTRONICALLY AND MAY HAVE BEEN INADVERTENTLY ALTERED. RELY ONLY ON FINAL HARDCOPY MATERIALS BEARING THE CONSULTANT'S ORIGINAL SIGNATURE AND SEAL. AERIAL IMAGERY PROVIDED BY GOOGLE© UNLESS OTHERWISE NOTED. Imagery © 2016,CAPCOG,Digital Globe,Texas Orthoimagery Program, USDA Farm Service Agency.

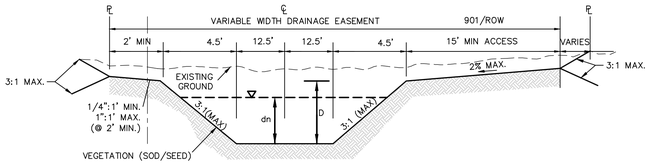

SECTION "B-B" EARTHEN TRAP. CHANNEL

NOT-TO-SCALE

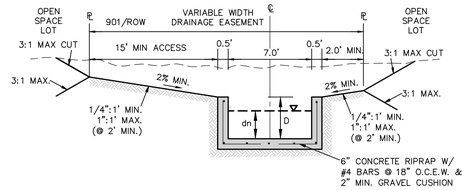

SECTION "C-C" CONCRETE U-CHANNEL

NOT-TO-SCALE

HYDRAULIC CALCULATIONS EARTHEN CHANNEL STA. 11+70.49 TO 13+95.45 (SECTION B-B)	HYDRAULIC CALCULATIONS ROCK CHANNEL STA. 13+95.45 TO 14+00.45 (SECTION B-B)	HYDRAULIC CALCULATIONS CONCRETE CHANNEL STA. 14+00.45 TO 16+30.00 (SECTION C-C)	HYDRAULIC CALCULATIONS CONCRETE CHANNEL STA. 16+30.00 TO 18+60.14 (SECTION C-C)
Q25 = 72.50	Q25 = 72.50	Q25 = 72.50	Q25 = 72.50
Bw = 25'	Bw = 25'	Bw = 7'	Bw = 7'
n = 0.035	n = 0.040	n = 0.015	n = 0.015
S = 0.60%	S = 0.60%	S = 0.50%	S = 2.14%
D = 1.50'	D = 1.50'	D = 2.00'	D = 2.00'
dn = 0.91'	dn = 0.98'	dn = 1.45'	dn = 0.90'
V = 2.88 FPS	V = 2.64 FPS	V = 7.13 FPS	V = 11.50 FPS

SCALE: 1"= 20'

0' 20' 40' 60'

DRAINAGE LEGEND

- PROJECT LIMITS
- 100 YR FLOODPLAIN
- EXISTING CONTOUR (690)
- PROPOSED CONTOUR (690)
- PROPOSED WATER (W)
- PROPOSED SEWER (SS)
- PROPOSED STORM DRAIN
- EXISTING STORM DRAIN
- FLOW ARROW

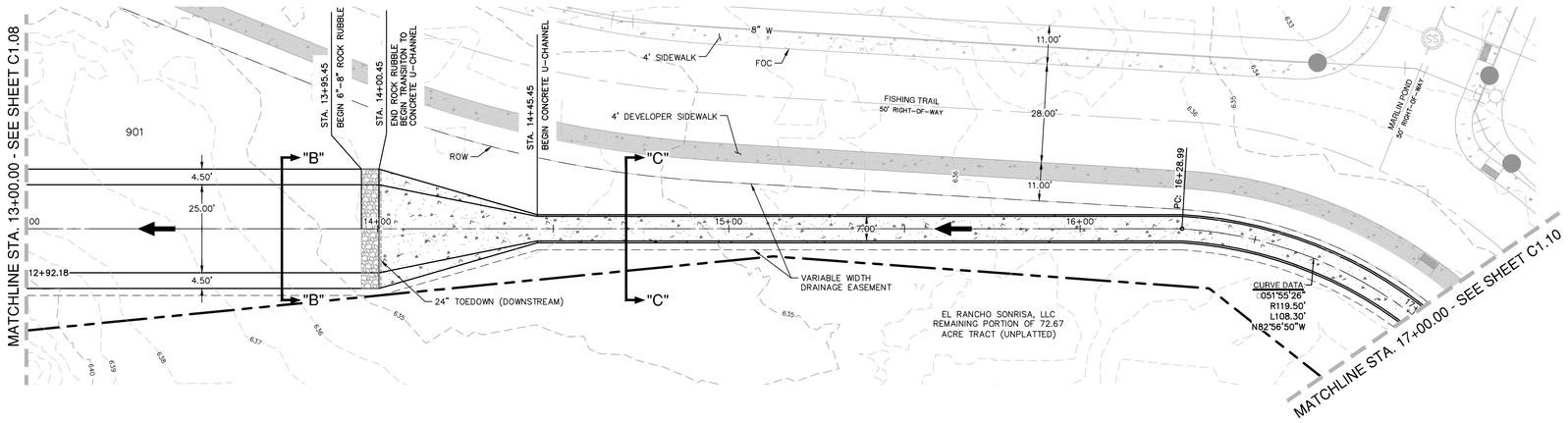

DRAIN "B"
STA. 13+00.00 TO 17+00.00

VERTICAL SCALE: 1" = 5'
HORIZONTAL SCALE: 1" = 20'

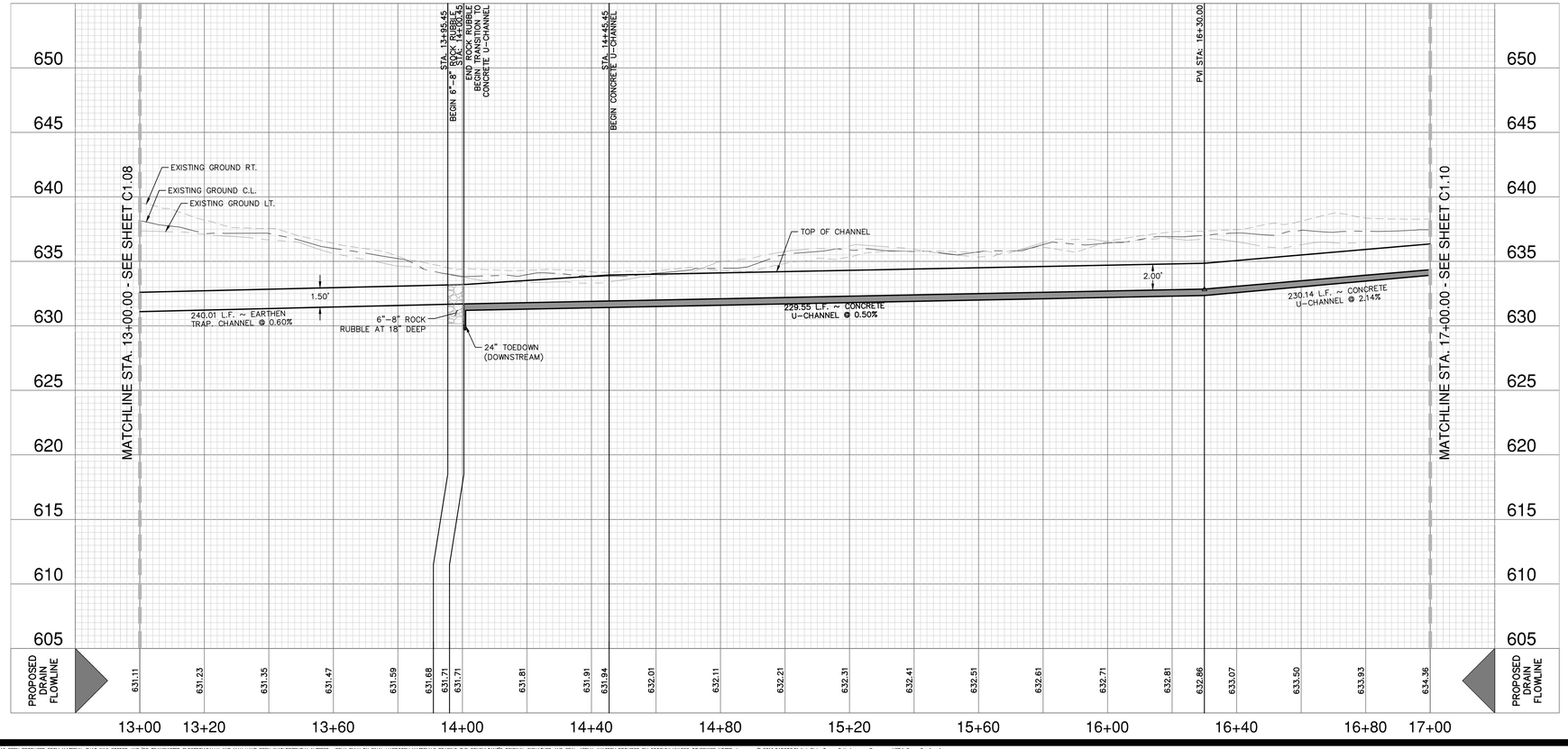

DRAINAGE & GRADING NOTES:

1. A CITY OF SAN ANTONIO ROW PERMIT MUST BE OBTAINED BEFORE WORKING IN BEXAR COUNTY ROW. CONTRACTOR SHALL COORDINATE A TRAFFIC CONTROL PLAN FOR ALL WORK WITHIN THE ROW. ADDITIONAL WARNING SIGNS MAY BE RECOMMENDED BY THE ENGINEER ONCE THE ROADWAYS ARE CONSTRUCTED.
2. THE CONTRACTOR WILL BE RESPONSIBLE FOR DETERMINING EXACT LOCATION OF ALL UTILITIES AND DRAINAGE STRUCTURES WHETHER SHOWN ON THE PLANS OR NOT. THE CONTRACTOR SHALL UNCOVER EXISTING UTILITIES PRIOR TO CONSTRUCTION TO VERIFY SIZE, GRADE, AND LOCATION. THE CONTRACTOR SHALL NOTIFY THE ENGINEER IMMEDIATELY OF ANY DEVIATIONS FROM PLANS PRIOR TO BEGINNING CONSTRUCTION. ANY DAMAGE TO EXISTING UTILITIES, WHETHER SHOWN ON THE PLANS OR NOT, SHALL BE THE CONTRACTOR'S RESPONSIBILITY TO REPAIR, AT HIS EXPENSE.
3. ALL CONCRETE FOR TXDOT DRAINAGE STRUCTURES SHALL MEET TXDOT SPECIFICATIONS. ALL OTHER CONCRETE SHALL BE CLASS "A" 3000 PSI CYLINDER STRENGTH IN 28 DAYS.
4. REFERENCE DRAINAGE DETAILS FOR PIPE TRENCH DETAILS, BOX CULVERT, HEADWALL, AND WINGWALL CONSTRUCTION DETAILS, AND BOX CULVERT BEDDING AND EXCAVATION LIMITS.
5. CONTRACTOR SHALL GROUT ALL CURB INLETS AND JUNCTION BOXES TO PROVIDE FOR POSITIVE DRAINAGE.
6. EARTHEN CHANNELS WILL BE VEGETATED BY SEEDING OR SODDING. 85% OF THE CHANNEL SURFACE MUST HAVE ESTABLISHED VEGETATION BEFORE THE CITY OF SAN ANTONIO WILL ACCEPT.
7. CONTRACTOR SHALL MATCH TOP OF CHANNEL TO NATURAL GROUND AND MAINTAIN A MINIMUM CHANNEL DEPTH OF "D" AS SHOWN IN THE PROFILE.

TRENCH EXCAVATION SAFETY PROTECTION:

CONTRACTOR AND/ OR CONTRACTOR'S INDEPENDENTLY RETAINED EMPLOYEE OR STRUCTURAL DESIGN/ GEOTECHNICAL/ SAFETY/EQUIPMENT CONSULTANT, IF ANY, SHALL REVIEW THESE PLANS AND ANY AVAILABLE GEOTECHNICAL INFORMATION AND THE ANTICIPATED INSTALLATION SITES WITHIN THE PROJECT WORK AREA IN ORDER TO IMPLEMENT CONTRACTOR'S TRENCH EXCAVATION SAFETY PROTECTION SYSTEMS, PROGRAMS AND /OR PROCEDURES FOR THE PROJECT DESCRIBED IN THE CONTRACT DOCUMENTS. THE CONTRACTOR'S IMPLEMENTATION OF THESE SYSTEMS, PROGRAMS AND/OR PROCEDURES SHALL PROVIDE FOR ADEQUATE TRENCH EXCAVATION SAFETY PROTECTION THAT COMPLY WITH AS A MINIMUM, OSHA STANDARDS FOR TRENCH EXCAVATIONS. SPECIFICALLY, CONTRACTOR AND/OR CONTRACTOR'S INDEPENDENTLY RETAINED EMPLOYEE OR SAFETY CONSULTANT SHALL IMPLEMENT A TRENCH SAFETY PROGRAM IN ACCORDANCE WITH OSHA STANDARDS GOVERNING THE PRESENCE AND ACTIVITIES OF INDIVIDUALS WORKING IN AND AROUND TRENCH EXCAVATION.

CAUTION!!

CONTRACTOR SHALL BE REQUIRED TO LOCATE ALL PUBLIC OR PRIVATE UTILITIES INCLUDING BUT NOT LIMITING TO: WATER, SEWER, TELEPHONE AND FIBER OPTIC LINES, SITE LIGHTING ELECTRIC, SECONDARY ELECTRIC, PRIMARY ELECTRICAL DUCTBANKS, LANDSCAPE IRRIGATION FACILITIES, AND GAS LINES. ANY UTILITY CONFLICTS THAT ARISE SHOULD BE COMMUNICATED TO THE ENGINEER IMMEDIATELY AND PRIOR TO CONSTRUCTION. THE CONTRACTOR SHALL CONTACT 1-800-DIG-TESS A MINIMUM OF 48 HOURS PRIOR TO THE START OF CONSTRUCTION. ANY DAMAGE TO EXISTING UTILITIES SHALL BE THE SOLE RESPONSIBILITY OF THE CONTRACTOR AND THE REPAIR SHALL BE AT CONTRACTOR'S SOLE EXPENSE WHETHER THE UTILITY IS SHOWN ON THESE PLANS OR NOT.

NO.	REVISION	DATE

STATE OF TEXAS
JON D. ADAME
82567
LICENSED PROFESSIONAL ENGINEER
3-30-23

PAPE-DAWSON ENGINEERS
SAN ANTONIO I AUSTIN I HOUSTON I FORT WORTH I DALLAS
2000 NW LOOP 410 I SAN ANTONIO, TX 78213 I 210.375.9000
TEXAS ENGINEERING FIRM #470 I TEXAS SURVEYING FIRM #10028800

SMILEY TRACT UNIT 1

SAN ANTONIO, TEXAS

DRAIN B STA. 13+00.00 TO 17+00.00
PLAN & PROFILE

PLAT NO. 22-11800482
JOB NO. 11100-97
DATE MARCH 2023
DESIGNER AA
CHECKED VS DRAWN AA
SHEET C1.09

Date: Mar 30, 2023, 5:01pm User ID: aatry
File: P:\11\00\97\Design\Civil\SDB1-1110097.dwg

THIS DOCUMENT HAS BEEN PRODUCED FROM MATERIAL THAT WAS STORED AND/OR TRANSMITTED ELECTRONICALLY AND MAY HAVE BEEN INADVERTENTLY ALTERED. RELY ONLY ON FINAL HARDCOPY MATERIALS BEARING THE CONSULTANT'S ORIGINAL SIGNATURE AND SEAL. AERIAL IMAGERY PROVIDED BY GOOGLE© UNLESS OTHERWISE NOTED. Imagery © 2016,CAPCOG,Digital Globe,Texas Orthoimagery Program, USDA Farm Service Agency.

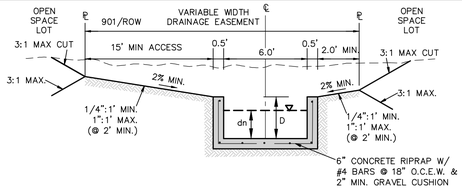

SECTION "C-C" CONCRETE U-CHANNEL

NOT-TO-SCALE

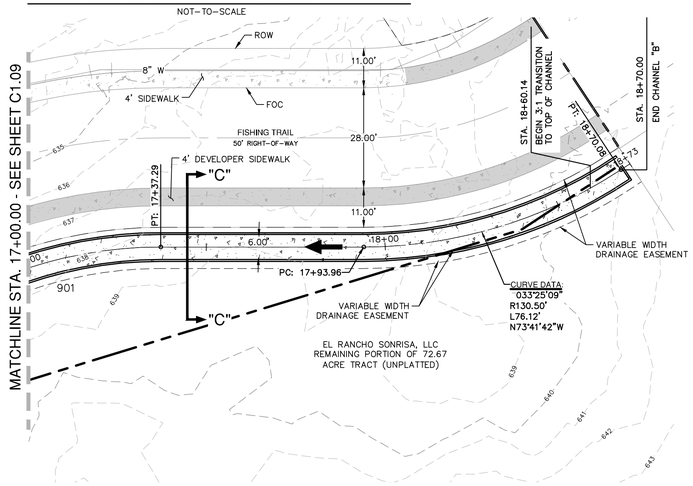

DRAIN "B"
STA. 17+00.00 TO END

VERTICAL SCALE: 1" = 5'
HORIZONTAL SCALE: 1" = 20'

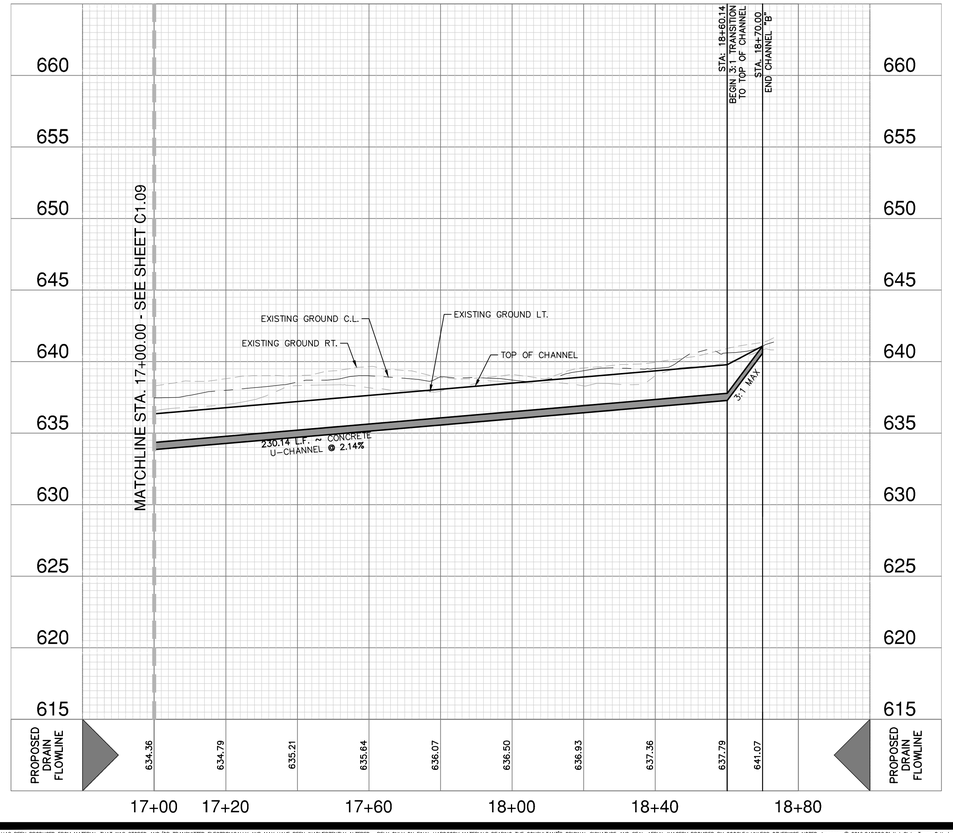

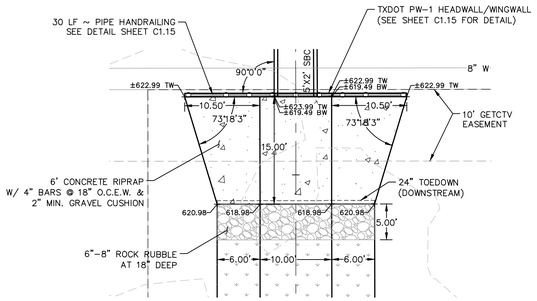

CULVERT "B-1" DOWNSTREAM HEADWALL DETAIL

SCALE: 1"=10'

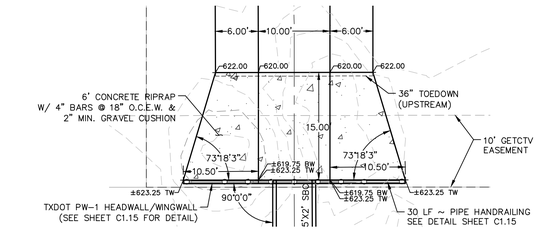

CULVERT "B-1" UPSTREAM HEADWALL DETAIL

SCALE: 1"=10'

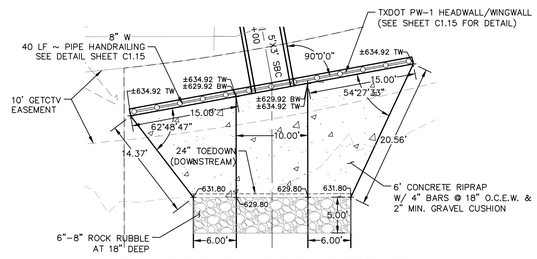

CULVERT "B-2" DOWNSTREAM HEADWALL DETAIL

SCALE: 1"=10'

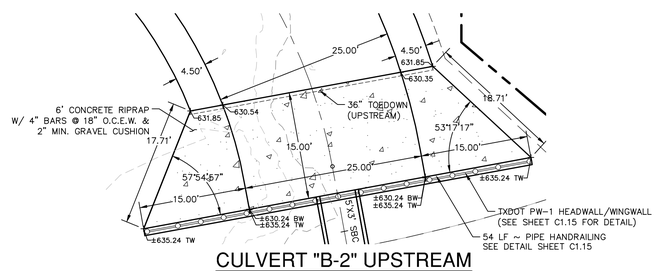

CULVERT "B-2" UPSTREAM HEADWALL DETAIL

SCALE: 1"=10'

DRAINAGE LEGEND

PROJECT LIMITS	
100 YR FLOODPLAIN	
EXISTING CONTOUR	690
PROPOSED CONTOUR	690
PROPOSED WATER	W
PROPOSED SEWER	SS
PROPOSED STORM DRAIN	
EXISTING STORM DRAIN	
FLOW ARROW	

HYDRAULIC CALCULATIONS CONCRETE CHANNEL

STA. 16+30.00 TO 18+70.00
(SECTION C-C)

Q25 = 72.50
Bw = 6'
n = 0.013
S = 2.14%
D = 2.00'
dn = 0.90'
V = 11.50 FPS

DRAINAGE & GRADING NOTES:

1. A CITY OF SAN ANTONIO ROW PERMIT MUST BE OBTAINED BEFORE WORKING IN BEXAR COUNTY ROW. CONTRACTOR SHALL COORDINATE A TRAFFIC CONTROL PLAN FOR ALL WORK WITHIN THE ROW. ADDITIONAL WARNING SIGNS MAY BE RECOMMENDED BY THE ENGINEER ONCE THE ROADWAYS ARE CONSTRUCTED.
2. THE CONTRACTOR WILL BE RESPONSIBLE FOR DETERMINING EXACT LOCATION OF ALL UTILITIES AND DRAINAGE STRUCTURES WHETHER SHOWN ON THE PLANS OR NOT. THE CONTRACTOR SHALL UNCOVER EXISTING UTILITIES PRIOR TO CONSTRUCTION TO VERIFY SIZE, GRADE, AND LOCATION. THE CONTRACTOR SHALL NOTIFY THE ENGINEER IMMEDIATELY OF ANY DEVIATIONS FROM PLANS PRIOR TO BEGINNING CONSTRUCTION. ANY DAMAGE TO EXISTING UTILITIES, WHETHER SHOWN ON THE PLANS OR NOT, SHALL BE THE CONTRACTOR'S RESPONSIBILITY TO REPAIR, AT HIS EXPENSE.
3. ALL CONCRETE FOR TXDOT DRAINAGE STRUCTURES SHALL MEET TXDOT SPECIFICATIONS. ALL OTHER CONCRETE SHALL BE CLASS "A" 3000 PSI CYLINDER STRENGTH IN 28 DAYS.
4. REFERENCE DRAINAGE DETAILS FOR PIPE TRENCH DETAILS, BOX CULVERT, HEADWALL, AND WINGWALL CONSTRUCTION DETAILS, AND BOX CULVERT BEDDING AND EXCAVATION LIMITS.
5. CONTRACTOR SHALL GROUT ALL CURB INLETS AND JUNCTION BOXES TO PROVIDE FOR POSITIVE DRAINAGE.
6. EARTHEN CHANNELS WILL BE VEGETATED BY SEEDING OR SODDING. 85% OF THE CHANNEL SURFACE MUST HAVE ESTABLISHED VEGETATION BEFORE THE CITY OF SAN ANTONIO WILL ACCEPT.
7. CONTRACTOR SHALL MATCH TOP OF CHANNEL TO NATURAL GROUND AND MAINTAIN A MINIMUM CHANNEL DEPTH OF "D" AS SHOWN IN THE PROFILE.

TRENCH EXCAVATION SAFETY PROTECTION:

CONTRACTOR AND/ OR CONTRACTOR'S INDEPENDENTLY RETAINED EMPLOYEE OR STRUCTURAL DESIGN/ GEOTECHNICAL/ SAFETY/EQUIPMENT CONSULTANT, IF ANY, SHALL REVIEW THESE PLANS AND ANY AVAILABLE GEOTECHNICAL INFORMATION AND THE ANTICIPATED INSTALLATION SITES WITHIN THE PROJECT WORK AREA IN ORDER TO IMPLEMENT CONTRACTOR'S TRENCH EXCAVATION SAFETY PROTECTION SYSTEMS, PROGRAMS AND /OR PROCEDURES FOR THE PROJECT DESCRIBED IN THE CONTRACT DOCUMENTS. THE CONTRACTOR'S IMPLEMENTATION OF THESE SYSTEMS, PROGRAMS AND/OR PROCEDURES SHALL PROVIDE FOR ADEQUATE TRENCH EXCAVATION SAFETY PROTECTION THAT COMPLY WITH AS A MINIMUM, OSHA STANDARDS FOR TRENCH EXCAVATIONS. SPECIFICALLY, CONTRACTOR AND/OR CONTRACTOR'S INDEPENDENTLY RETAINED EMPLOYEE OR SAFETY CONSULTANT SHALL IMPLEMENT A TRENCH SAFETY PROGRAM IN ACCORDANCE WITH OSHA STANDARDS GOVERNING THE PRESENCE AND ACTIVITIES OF INDIVIDUALS WORKING IN AND AROUND TRENCH EXCAVATION.

CAUTION!!

CONTRACTOR SHALL BE REQUIRED TO LOCATE ALL PUBLIC OR PRIVATE UTILITIES INCLUDING BUT NOT LIMITING TO: WATER, SEWER, TELEPHONE AND FIBER OPTIC LINES, SITE LIGHTING ELECTRIC, SECONDARY ELECTRIC, PRIMARY ELECTRICAL DUCTBANKS, LANDSCAPE IRRIGATION FACILITIES, AND GAS LINES. ANY UTILITY CONFLICTS THAT ARISE SHOULD BE COMMUNICATED TO THE ENGINEER IMMEDIATELY AND PRIOR TO CONSTRUCTION. THE CONTRACTOR SHALL CONTACT 1-800-DIG-TESS A MINIMUM OF 48 HOURS PRIOR TO THE START OF CONSTRUCTION. ANY DAMAGE TO EXISTING UTILITIES SHALL BE THE SOLE RESPONSIBILITY OF THE CONTRACTOR AND THE REPAIR SHALL BE AT CONTRACTOR'S SOLE EXPENSE WHETHER THE UTILITY IS SHOWN ON THESE PLANS OR NOT.

NO.	REVISION	DATE

THE STATE OF TEXAS
JON D. ADAME
82567
LICENSED PROFESSIONAL ENGINEER
3-30-23

PAPE-DAWSON ENGINEERS
SAN ANTONIO I AUSTIN I HOUSTON I FORT WORTH I DALLAS
2000 NW LOOP 410 I SAN ANTONIO, TX 78213 I 210.375.9000
TEXAS ENGINEERING FIRM #470 I TEXAS SURVEYING FIRM #10028800

SMILEY TRACT UNIT 1

SAN ANTONIO, TEXAS

DRAIN B STA. 17+00.00 TO END
PLAN & PROFILE

PLAT NO. 22-11800482
JOB NO. 11100-97
DATE MARCH 2023
DESIGNER AA
CHECKED VS DRAWN AA
SHEET C1.10

Date: Mar 30, 2023, 5:01pm User ID: oatry
File: P:\111\00\97\Design\Civil\SDB1-1110097.dwg

THIS DOCUMENT HAS BEEN PRODUCED FROM MATERIAL THAT WAS STORED AND/OR TRANSMITTED ELECTRONICALLY AND MAY HAVE BEEN INADVERTENTLY ALTERED. RELY ONLY ON FINAL HARDCOPY MATERIALS BEARING THE CONSULTANT'S ORIGINAL SIGNATURE AND SEAL. AERIAL IMAGERY PROVIDED BY GOOGLE© UNLESS OTHERWISE NOTED. Imagery © 2016,CAPCOG,Digital Globe,Texas Orthoimagery Program, USDA Farm Service Agency.

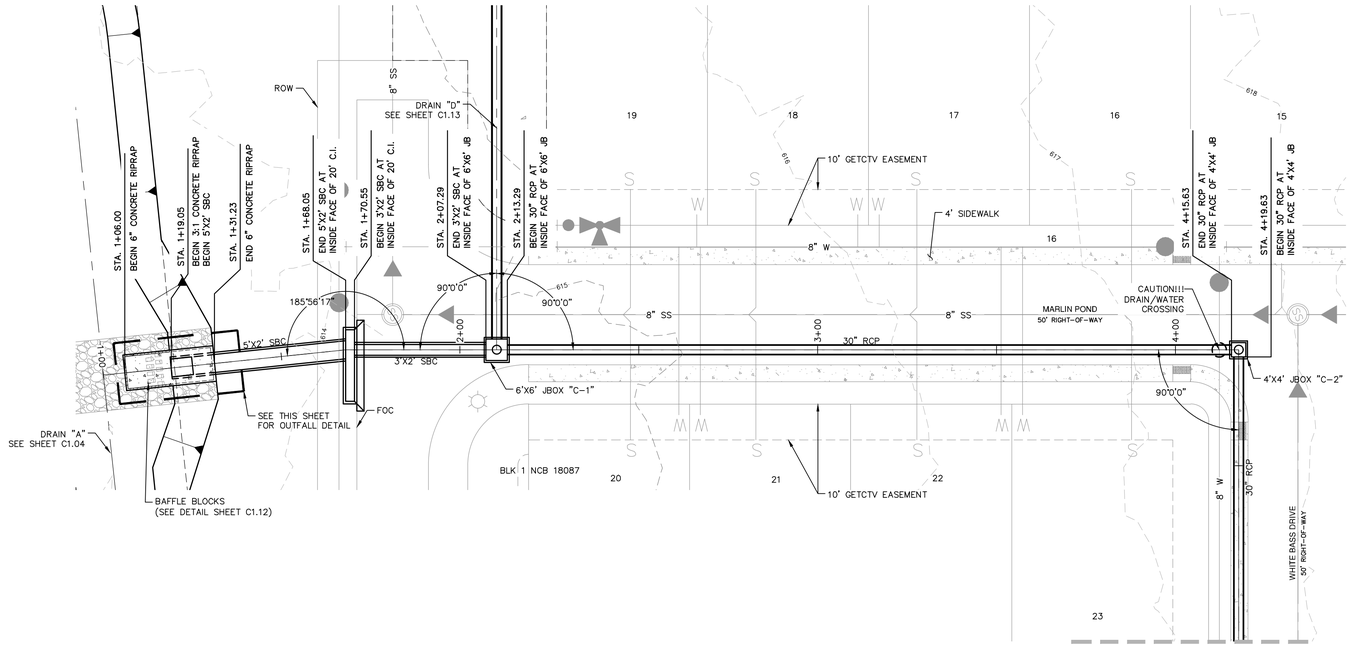

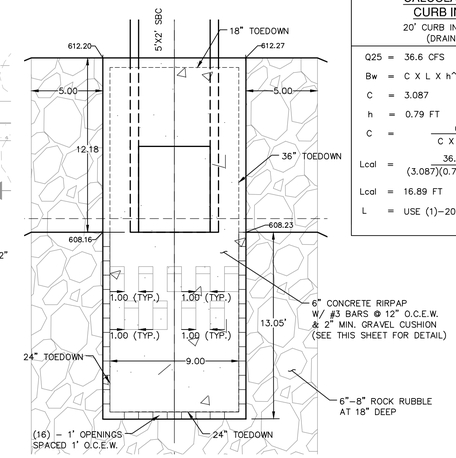

DRAIN "C" OUTFALL DETAIL

NOT-TO-SCALE

HYDRAULIC CALCULATIONS CURB INLET
20' CURB INLET C-1 (DRAIN C)
Q25 = 36.6 CFS
Bw = C X L X h^(3/2) (WIER EQ.)
C = 3.087
h = 0.79 FT
C = Q / (C X h^(3/2))
Lcal = 36.6 CFS / (3.087)(0.79 FT)^(3/2)
Lcal = 16.89 FT
L = USE (1)-20 FT CURB INLET

SCALE: 1"= 20'

0' 20' 40' 60'

DRAINAGE LEGEND

- PROJECT LIMITS
- 100 YR FLOODPLAIN
- EXISTING CONTOUR (690)
- PROPOSED CONTOUR (690)
- PROPOSED WATER (W)
- PROPOSED SEWER (SS)
- PROPOSED STORM DRAIN
- EXISTING STORM DRAIN
- FLOW ARROW

KEY LEGEND

- (C) CONCRETE COLLAR (SEE DETAIL SHEET C1.18)
- (D) CONTRACTOR TO GROUT BOTTOM OF BOX TO ALLOW FOR POSITIVE DRAINAGE

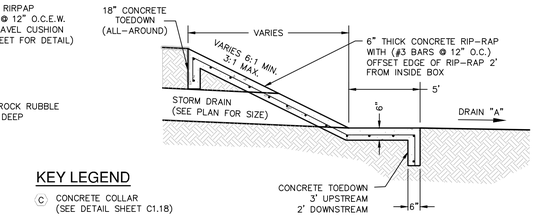

SIDE VIEW

NOT-TO-SCALE

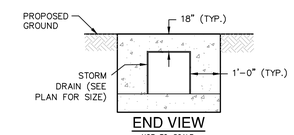

END VIEW

NOT-TO-SCALE

DRAIN "C" OUTFALL DETAIL

NOT-TO-SCALE

MATCHLINE STA. 5+00.00 - SEE SHEET C1.12

DRAIN "C"
STA. 1+00.00 TO 5+00.00

VERTICAL SCALE: 1" = 5'
HORIZONTAL SCALE: 1" = 20'

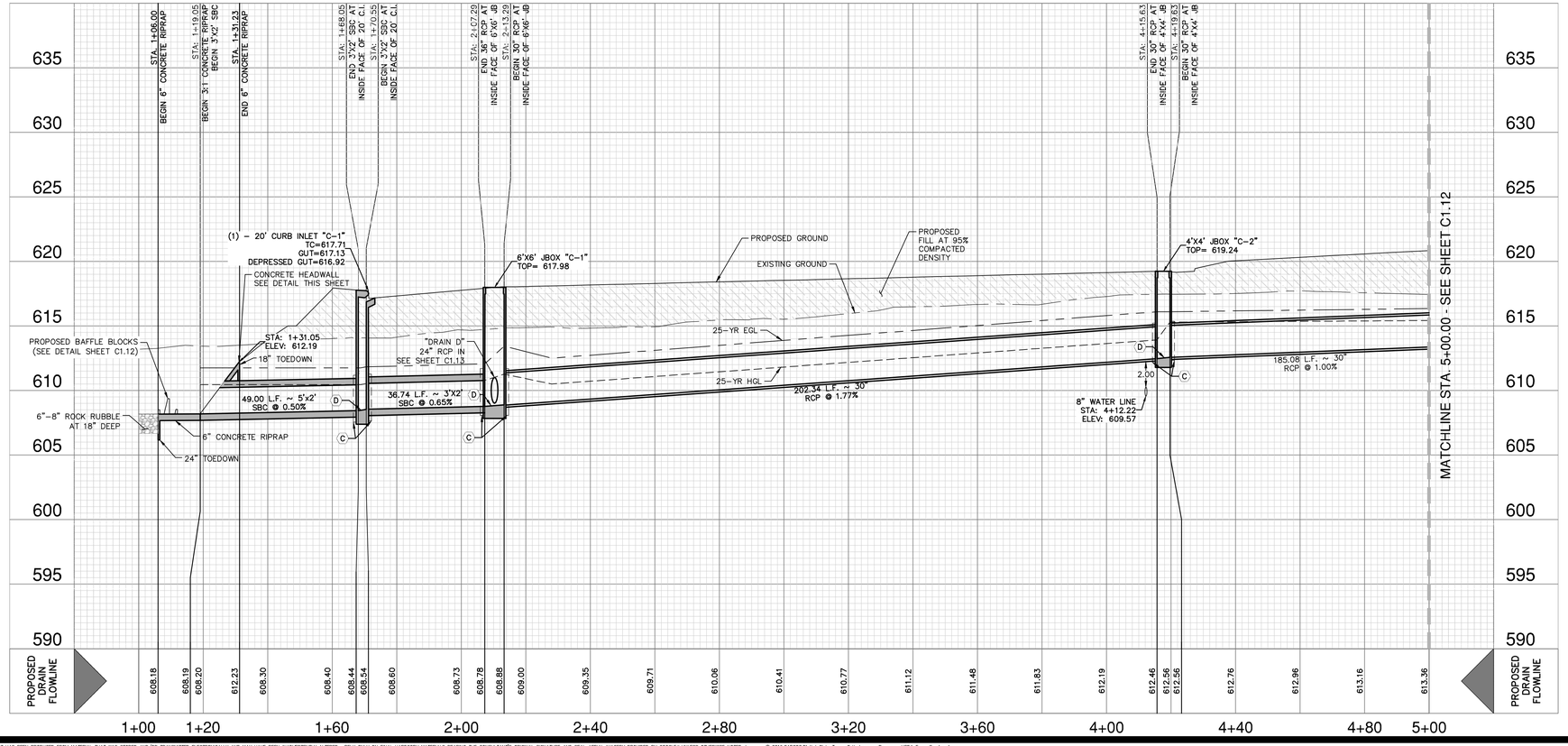

DRAINAGE CONCRETE RIP RAP DETAIL - DRAIN "C"

NOT-TO-SCALE

DRAINAGE & GRADING NOTES:

1. A CITY OF SAN ANTONIO ROW PERMIT MUST BE OBTAINED BEFORE WORKING IN BEXAR COUNTY ROW. CONTRACTOR SHALL COORDINATE A TRAFFIC CONTROL PLAN FOR ALL WORK WITHIN THE ROW. ADDITIONAL WARNING SIGNS MAY BE RECOMMENDED BY THE ENGINEER ONCE THE ROADWAYS ARE CONSTRUCTED.
2. THE CONTRACTOR WILL BE RESPONSIBLE FOR DETERMINING EXACT LOCATION OF ALL UTILITIES AND DRAINAGE STRUCTURES WHETHER SHOWN ON THE PLANS OR NOT. THE CONTRACTOR SHALL UNCOVER EXISTING UTILITIES PRIOR TO CONSTRUCTION TO VERIFY SIZE, GRADE, AND LOCATION. THE CONTRACTOR SHALL NOTIFY THE ENGINEER IMMEDIATELY OF ANY DEVIATIONS FROM PLANS PRIOR TO BEGINNING CONSTRUCTION. ANY DAMAGE TO EXISTING UTILITIES, WHETHER SHOWN ON THE PLANS OR NOT, SHALL BE THE CONTRACTOR'S RESPONSIBILITY TO REPAIR, AT HIS EXPENSE.
3. ALL CONCRETE FOR TXDOT DRAINAGE STRUCTURES SHALL MEET TXDOT SPECIFICATIONS. ALL OTHER CONCRETE SHALL BE CLASS "A" 3000 PSI CYLINDER STRENGTH IN 28 DAYS.
4. REFERENCE DRAINAGE DETAILS FOR PIPE TRENCH DETAILS, BOX CULVERT, HEADWALL, AND WINGWALL CONSTRUCTION DETAILS, AND BOX CULVERT BEDDING AND EXCAVATION LIMITS.
5. CONTRACTOR SHALL GROUT ALL CURB INLETS AND JUNCTION BOXES TO PROVIDE FOR POSITIVE DRAINAGE.
6. EARTHEN CHANNELS WILL BE VEGETATED BY SEEDING OR SODDING. 85% OF THE CHANNEL SURFACE MUST HAVE ESTABLISHED VEGETATION BEFORE THE CITY OF SAN ANTONIO WILL ACCEPT.
7. CONTRACTOR SHALL MATCH TOP OF CHANNEL TO NATURAL GROUND AND MAINTAIN A MINIMUM CHANNEL DEPTH OF "D" AS SHOWN IN THE PROFILE.

TRENCH EXCAVATION SAFETY PROTECTION:

CONTRACTOR AND/ OR CONTRACTOR'S INDEPENDENTLY RETAINED EMPLOYEE OR STRUCTURAL DESIGN/ GEOTECHNICAL/ SAFETY/EQUIPMENT CONSULTANT, IF ANY, SHALL REVIEW THESE PLANS AND ANY AVAILABLE GEOTECHNICAL INFORMATION AND THE ANTICIPATED INSTALLATION SITES WITHIN THE PROJECT WORK AREA IN ORDER TO IMPLEMENT CONTRACTOR'S TRENCH EXCAVATION SAFETY PROTECTION SYSTEMS, PROGRAMS AND /OR PROCEDURES FOR THE PROJECT DESCRIBED IN THE CONTRACT DOCUMENTS. THE CONTRACTOR'S IMPLEMENTATION OF THESE SYSTEMS, PROGRAMS AND/OR PROCEDURES SHALL PROVIDE FOR ADEQUATE TRENCH EXCAVATION SAFETY PROTECTION THAT COMPLY WITH AS A MINIMUM, OSHA STANDARDS FOR TRENCH EXCAVATIONS. SPECIFICALLY, CONTRACTOR AND/OR CONTRACTOR'S INDEPENDENTLY RETAINED EMPLOYEE OR SAFETY CONSULTANT SHALL IMPLEMENT A TRENCH SAFETY PROGRAM IN ACCORDANCE WITH OSHA STANDARDS GOVERNING THE PRESENCE AND ACTIVITIES OF INDIVIDUALS WORKING IN AND AROUND TRENCH EXCAVATION.

CAUTION!!

CONTRACTOR SHALL BE REQUIRED TO LOCATE ALL PUBLIC OR PRIVATE UTILITIES INCLUDING BUT NOT LIMITING TO: WATER, SEWER, TELEPHONE AND FIBER OPTIC LINES, SITE LIGHTING ELECTRIC, SECONDARY ELECTRIC, PRIMARY ELECTRICAL DUCTBANKS, LANDSCAPE IRRIGATION FACILITIES, AND GAS LINES. ANY UTILITY CONFLICTS THAT ARISE SHOULD BE COMMUNICATED TO THE ENGINEER IMMEDIATELY AND PRIOR TO CONSTRUCTION. THE CONTRACTOR SHALL CONTACT 1-800-DIG-TESS A MINIMUM OF 48 HOURS PRIOR TO THE START OF CONSTRUCTION. ANY DAMAGE TO EXISTING UTILITIES SHALL BE THE SOLE RESPONSIBILITY OF THE CONTRACTOR AND THE REPAIR SHALL BE AT CONTRACTOR'S SOLE EXPENSE WHETHER THE UTILITY IS SHOWN ON THESE PLANS OR NOT.

NO.	REVISION	DATE

STATE OF TEXAS
JON D. ADAME
82567
LICENSED PROFESSIONAL ENGINEER
3-30-23

PAPE-DAWSON ENGINEERS
SAN ANTONIO I AUSTIN I HOUSTON I FORT WORTH I DALLAS
2000 NW LOOP 410 I SAN ANTONIO, TX 78213 I 210.375.9000
TEXAS ENGINEERING FIRM #470 I TEXAS SURVEYING FIRM #10028800

SMILEY TRACT UNIT 1

SAN ANTONIO, TEXAS

DRAIN C STA. 1+00.00 TO 5+00.00
PLAN & PROFILE

PLAT NO.	22-11800482
JOB NO.	11100-97
DATE	MARCH 2023
DESIGNER	AA
CHECKED	VS DRAWN AA
SHEET	C1.11

Date: Mar 30, 2023, 5:02am User ID: aatry
File: P:\111\00\97\Design\Civil\SDC1-1110097.dwg

THIS DOCUMENT HAS BEEN PRODUCED FROM MATERIAL THAT WAS STORED AND/OR TRANSMITTED ELECTRONICALLY AND MAY HAVE BEEN INADVERTENTLY ALTERED. RELY ONLY ON FINAL HARDCOPY MATERIALS BEARING THE CONSULTANT'S ORIGINAL SIGNATURE AND SEAL. AERIAL IMAGERY PROVIDED BY GOOGLE© UNLESS OTHERWISE NOTED. Imagery © 2016,CAPCOG,Digital Globe,Texas Orthoimagery Program, USDA Farm Service Agency.

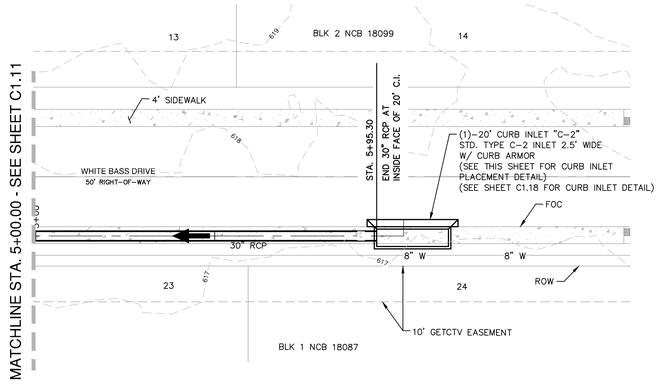

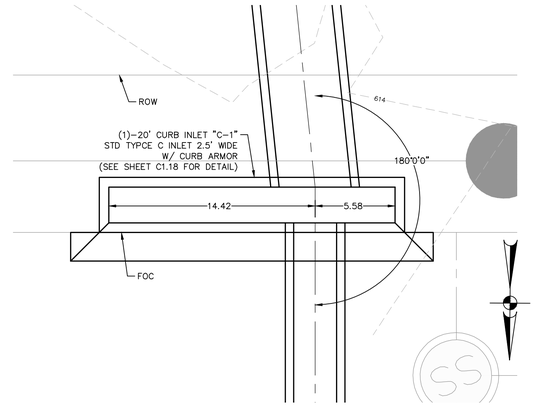

CURB INLET "C-1" PLACEMENT DETAIL

NOT-TO-SCALE

SCALE: 1"= 20'

0' 20' 40' 60'

DRAINAGE LEGEND

PROJECT LIMITS
100 YR FLOODPLAIN
EXISTING CONTOUR — 690
PROPOSED CONTOUR — 690
PROPOSED WATER — W
PROPOSED SEWER — SS
PROPOSED STORM DRAIN
EXISTING STORM DRAIN
FLOW ARROW

HYDRAULIC CALCULATIONS CURB INLET

20' CURB INLET C-2
(DRAIN C)

Q25 = 35.3 CFS

Bw = C X L X h^(3/2) (WIER EQ.)

C = 3.087

h = 0.79 FT

$$C = \frac{Q}{C \times h^{(3/2)}}$$

$$Lcal = \frac{35.3\ CFS}{(3.087)(0.79\ FT)^{(3/2)}}$$

Lcal = 16.29 FT

L = USE (1)-20 FT CURB INLET

DRAIN "C"
STA. 5+00.00 TO END

VERTICAL SCALE: 1" = 5'
HORIZONTAL SCALE: 1" = 20'

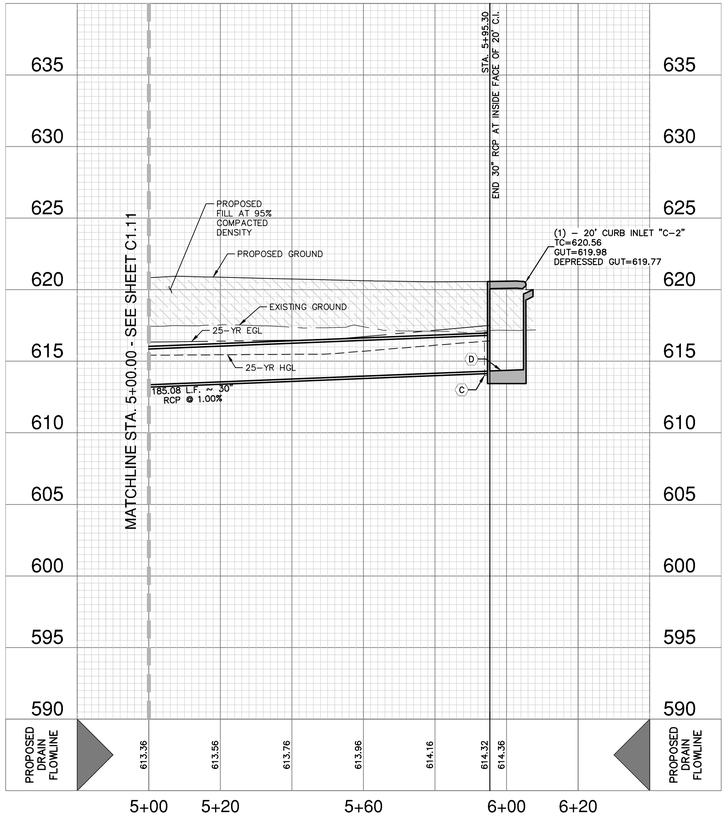

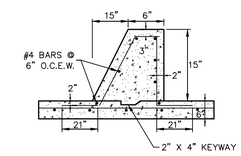

BAFFLE BLOCK 1 DETAIL

NOT-TO-SCALE

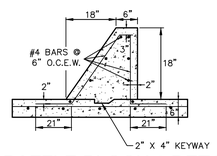

BAFFLE BLOCK 2 DETAIL

NOT-TO-SCALE

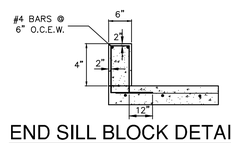

END SILL BLOCK DETAIL

NOT-TO-SCALE

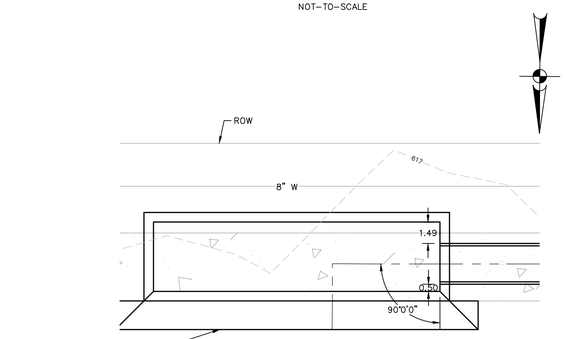

CURB INLET "C-2" PLACEMENT DETAIL

NOT-TO-SCALE

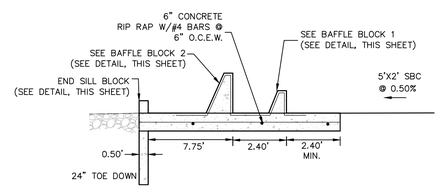

BAFFLE BLOCKS DETAIL

NOT-TO-SCALE

KEY LEGEND

(C) CONCRETE COLLAR (SEE DETAIL SHEET C1.18)

(D) CONTRACTOR TO GROUT BOTTOM OF BOX TO ALLOW FOR POSITIVE DRAINAGE

DRAINAGE & GRADING NOTES:

1. A CITY OF SAN ANTONIO ROW PERMIT MUST BE OBTAINED BEFORE WORKING IN BEXAR COUNTY ROW. CONTRACTOR SHALL COORDINATE A TRAFFIC CONTROL PLAN FOR ALL WORK WITHIN THE ROW. ADDITIONAL WARNING SIGNS MAY BE RECOMMENDED BY THE ENGINEER ONCE THE ROADWAYS ARE CONSTRUCTED.
2. THE CONTRACTOR WILL BE RESPONSIBLE FOR DETERMINING EXACT LOCATION OF ALL UTILITIES AND DRAINAGE STRUCTURES WHETHER SHOWN ON THE PLANS OR NOT. THE CONTRACTOR SHALL UNCOVER EXISTING UTILITIES PRIOR TO CONSTRUCTION TO VERIFY SIZE, GRADE, AND LOCATION. THE CONTRACTOR SHALL NOTIFY THE ENGINEER IMMEDIATELY OF ANY DEVIATIONS FROM PLANS PRIOR TO BEGINNING CONSTRUCTION. ANY DAMAGE TO EXISTING UTILITIES, WHETHER SHOWN ON THE PLANS OR NOT, SHALL BE THE CONTRACTOR'S RESPONSIBILITY TO REPAIR, AT HIS EXPENSE.
3. ALL CONCRETE FOR TXDOT DRAINAGE STRUCTURES SHALL MEET TXDOT SPECIFICATIONS. ALL OTHER CONCRETE SHALL BE CLASS "A" 3000 PSI CYLINDER STRENGTH IN 28 DAYS.
4. REFERENCE DRAINAGE DETAILS FOR PIPE TRENCH DETAILS, BOX CULVERT, HEADWALL, AND WINGWALL CONSTRUCTION DETAILS, AND BOX CULVERT BEDDING AND EXCAVATION LIMITS.
5. CONTRACTOR SHALL GROUT ALL CURB INLETS AND JUNCTION BOXES TO PROVIDE FOR POSITIVE DRAINAGE.
6. EARTHEN CHANNELS WILL BE VEGETATED BY SEEDING OR SODDING. 85% OF THE CHANNEL SURFACE MUST HAVE ESTABLISHED VEGETATION BEFORE THE CITY OF SAN ANTONIO WILL ACCEPT.
7. CONTRACTOR SHALL MATCH TOP OF CHANNEL TO NATURAL GROUND AND MAINTAIN A MINIMUM CHANNEL DEPTH OF "D" AS SHOWN IN THE PROFILE.

TRENCH EXCAVATION SAFETY PROTECTION:

CONTRACTOR AND/ OR CONTRACTOR'S INDEPENDENTLY RETAINED EMPLOYEE OR STRUCTURAL DESIGN/ GEOTECHNICAL/ SAFETY/EQUIPMENT CONSULTANT, IF ANY, SHALL REVIEW THESE PLANS AND ANY AVAILABLE GEOTECHNICAL INFORMATION AND THE ANTICIPATED INSTALLATION SITES WITHIN THE PROJECT WORK AREA IN ORDER TO IMPLEMENT CONTRACTOR'S TRENCH EXCAVATION SAFETY PROTECTION SYSTEMS, PROGRAMS AND /OR PROCEDURES FOR THE PROJECT DESCRIBED IN THE CONTRACT DOCUMENTS. THE CONTRACTOR'S IMPLEMENTATION OF THESE SYSTEMS, PROGRAMS AND/OR PROCEDURES SHALL PROVIDE FOR ADEQUATE TRENCH EXCAVATION SAFETY PROTECTION THAT COMPLY WITH AS A MINIMUM, OSHA STANDARDS FOR TRENCH EXCAVATIONS. SPECIFICALLY, CONTRACTOR AND/OR CONTRACTOR'S INDEPENDENTLY RETAINED EMPLOYEE OR SAFETY CONSULTANT SHALL IMPLEMENT A TRENCH SAFETY PROGRAM IN ACCORDANCE WITH OSHA STANDARDS GOVERNING THE PRESENCE AND ACTIVITIES OF INDIVIDUALS WORKING IN AND AROUND TRENCH EXCAVATION.

CAUTION!!

CONTRACTOR SHALL BE REQUIRED TO LOCATE ALL PUBLIC OR PRIVATE UTILITIES INCLUDING BUT NOT LIMITING TO: WATER, SEWER, TELEPHONE AND FIBER OPTIC LINES, SITE LIGHTING ELECTRIC, SECONDARY ELECTRIC, PRIMARY ELECTRICAL DUCTBANKS, LANDSCAPE IRRIGATION FACILITIES, AND GAS LINES. ANY UTILITY CONFLICTS THAT ARISE SHOULD BE COMMUNICATED TO THE ENGINEER IMMEDIATELY AND PRIOR TO CONSTRUCTION. THE CONTRACTOR SHALL CONTACT 1-800-DIG-TESS A MINIMUM OF 48 HOURS PRIOR TO THE START OF CONSTRUCTION. ANY DAMAGE TO EXISTING UTILITIES SHALL BE THE SOLE RESPONSIBILITY OF THE CONTRACTOR AND THE REPAIR SHALL BE AT CONTRACTOR'S SOLE EXPENSE WHETHER THE UTILITY IS SHOWN ON THESE PLANS OR NOT.

NO.	REVISION	DATE

STATE OF TEXAS
JON D. ADAME
82567
LICENSED PROFESSIONAL ENGINEER
3-30-23

PAPE-DAWSON ENGINEERS
SAN ANTONIO I AUSTIN I HOUSTON I FORT WORTH I DALLAS
2000 NW LOOP 410 I SAN ANTONIO, TX 78213 I 210.375.9000
TEXAS ENGINEERING FIRM #470 I TEXAS SURVEYING FIRM #10028800

SMILEY TRACT UNIT 1

SAN ANTONIO, TEXAS

DRAIN C STA. 5+00.00 TO END
PLAN & PROFILE

PLAT NO. 22-11800482
JOB NO. 11100-97
DATE MARCH 2023
DESIGNER AA
CHECKED VS DRAWN AA
SHEET C1.12

Date: Mar 30, 2023, 5:02pm User ID: oatry
File: P:\111\00\97\Design\Civil\SDC1-1110097.dwg

THIS DOCUMENT HAS BEEN PRODUCED FROM MATERIAL THAT WAS STORED AND/OR TRANSMITTED ELECTRONICALLY AND MAY HAVE BEEN INADVERTENTLY ALTERED. RELY ONLY ON FINAL HARDCOPY MATERIALS BEARING THE CONSULTANT'S ORIGINAL SIGNATURE AND SEAL. AERIAL IMAGERY PROVIDED BY GOOGLE® UNLESS OTHERWISE NOTED. Imagery © 2016,CAPCOG,Digital Globe,Texas Orthoimagery Program, USDA Farm Service Agency.

HYDRAULIC CALCULATIONS EARTHEN CHANNEL STA. 2+85.33 TO 4+47.00 (SECTION A–A)	HYDRAULIC CALCULATIONS 4-WAY INLET 4'X4' 4–WAY INLET "D–1" (DRAIN B)
Q25 = 19.40	Q25 = 19.4 CFS
Bw = 6'	Bw = C X L X h^(3/2) (WIER EQ.)
n = 0.035	C = 3.087
S = 0.50%	h = 1.50 FT
D = 1.50'	C = Q / (C X h^(3/2))
dn = 0.93'	Lcal = 19.4 CFS / (3.087)(0.75 FT)^(3/2)
V = 2.35 FPS	Lcal = 9.68 FT /4 = 2.42'
	L = USE (1)–4'X4' INLET

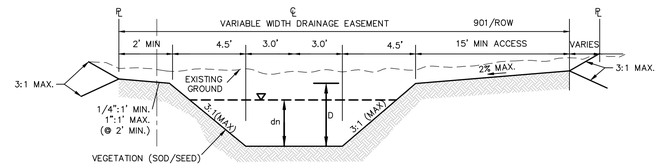

SECTION "A-A" EARTHEN TRAP. CHANNEL

NOT–TO–SCALE

SCALE: 1"= 20'

0' 20' 40' 60'

DRAINAGE LEGEND

- PROJECT LIMITS
- 100 YR FLOODPLAIN
- EXISTING CONTOUR (690)
- PROPOSED CONTOUR (690)
- PROPOSED WATER (W)
- PROPOSED SEWER (SS)
- PROPOSED STORM DRAIN
- EXISTING STORM DRAIN
- FLOW ARROW

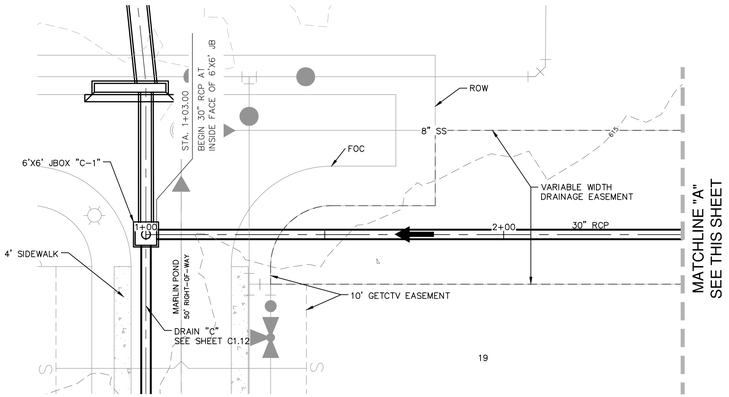

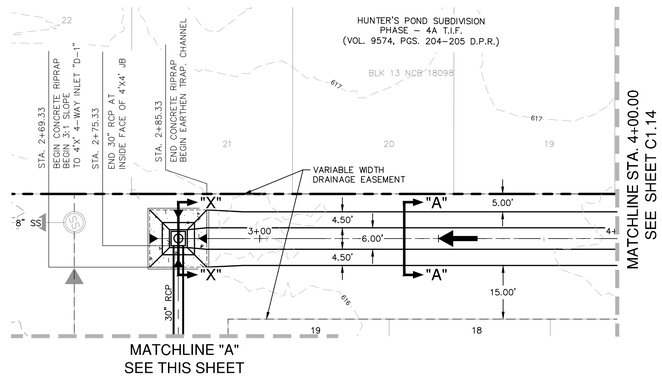

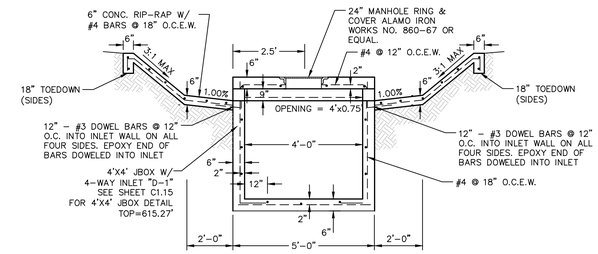

TYPICAL 4-WAY INLET DETAIL SECTION X-X

NOT–TO–SCALE

DRAIN "D"
STA. 1+00.00 TO 4+00.00

VERTICAL SCALE: 1" = 5'
HORIZONTAL SCALE: 1" = 20'

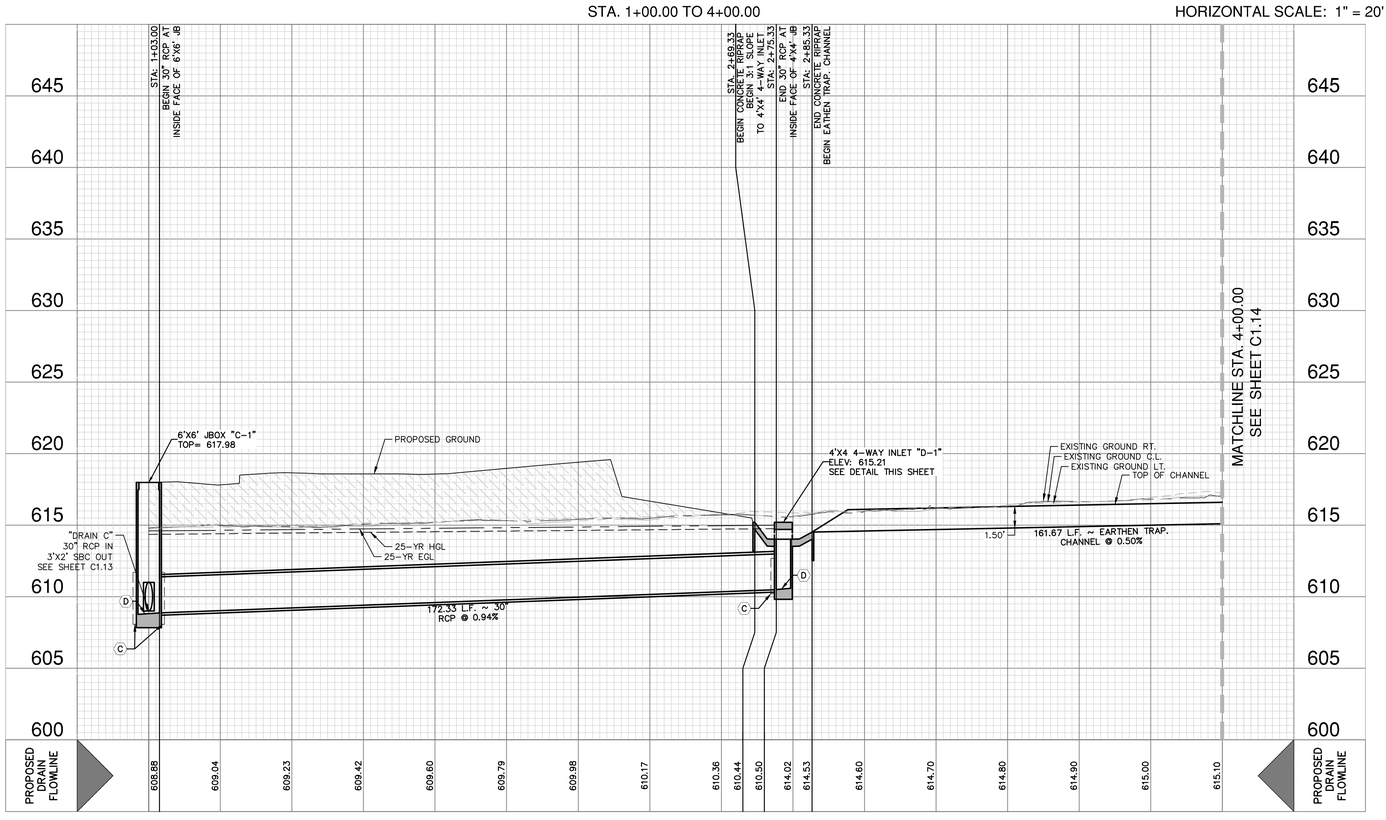

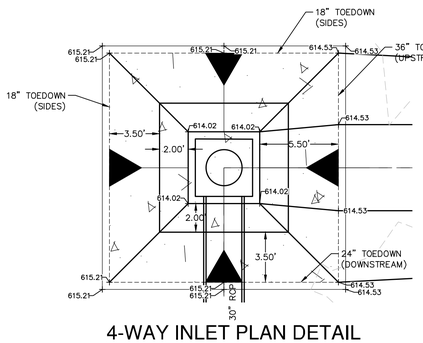

4-WAY INLET PLAN DETAIL

NOT–TO–SCALE

KEY LEGEND

- (C) CONCRETE COLLAR (SEE DETAIL SHEET C1.18)
- (D) CONTRACTOR TO GROUT BOTTOM OF BOX TO ALLOW FOR POSITIVE DRAINAGE

DRAINAGE & GRADING NOTES:

1. A CITY OF SAN ANTONIO ROW PERMIT MUST BE OBTAINED BEFORE WORKING IN BEXAR COUNTY ROW. CONTRACTOR SHALL COORDINATE A TRAFFIC CONTROL PLAN FOR ALL WORK WITHIN THE ROW. ADDITIONAL WARNING SIGNS MAY BE RECOMMENDED BY THE ENGINEER ONCE THE ROADWAYS ARE CONSTRUCTED.
2. THE CONTRACTOR WILL BE RESPONSIBLE FOR DETERMINING EXACT LOCATION OF ALL UTILITIES AND DRAINAGE STRUCTURES WHETHER SHOWN ON THE PLANS OR NOT. THE CONTRACTOR SHALL UNCOVER EXISTING UTILITIES PRIOR TO CONSTRUCTION TO VERIFY SIZE, GRADE, AND LOCATION. THE CONTRACTOR SHALL NOTIFY THE ENGINEER IMMEDIATELY OF ANY DEVIATIONS FROM PLANS PRIOR TO BEGINNING CONSTRUCTION. ANY DAMAGE TO EXISTING UTILITIES, WHETHER SHOWN ON THE PLANS OR NOT, SHALL BE THE CONTRACTOR'S RESPONSIBILITY TO REPAIR, AT HIS EXPENSE.
3. ALL CONCRETE FOR TXDOT DRAINAGE STRUCTURES SHALL MEET TXDOT SPECIFICATIONS. ALL OTHER CONCRETE SHALL BE CLASS "A" 3000 PSI CYLINDER STRENGTH IN 28 DAYS.
4. REFERENCE DRAINAGE DETAILS FOR PIPE TRENCH DETAILS, BOX CULVERT, HEADWALL, AND WINGWALL CONSTRUCTION DETAILS, AND BOX CULVERT BEDDING AND EXCAVATION LIMITS.
5. CONTRACTOR SHALL GROUT ALL CURB INLETS AND JUNCTION BOXES TO PROVIDE FOR POSITIVE DRAINAGE.
6. EARTHEN CHANNELS WILL BE VEGETATED BY SEEDING OR SODDING. 85% OF THE CHANNEL SURFACE MUST HAVE ESTABLISHED VEGETATION BEFORE THE CITY OF SAN ANTONIO WILL ACCEPT.
7. CONTRACTOR SHALL MATCH TOP OF CHANNEL TO NATURAL GROUND AND MAINTAIN A MINIMUM CHANNEL DEPTH OF "D" AS SHOWN IN THE PROFILE.

TRENCH EXCAVATION SAFETY PROTECTION:

CONTRACTOR AND/ OR CONTRACTOR'S INDEPENDENTLY RETAINED EMPLOYEE OR STRUCTURAL DESIGN/ GEOTECHNICAL/ SAFETY/EQUIPMENT CONSULTANT, IF ANY, SHALL REVIEW THESE PLANS AND ANY AVAILABLE GEOTECHNICAL INFORMATION AND THE ANTICIPATED INSTALLATION SITES WITHIN THE PROJECT WORK AREA IN ORDER TO IMPLEMENT CONTRACTOR'S TRENCH EXCAVATION SAFETY PROTECTION SYSTEMS, PROGRAMS AND /OR PROCEDURES FOR THE PROJECT DESCRIBED IN THE CONTRACT DOCUMENTS. THE CONTRACTOR'S IMPLEMENTATION OF THESE SYSTEMS, PROGRAMS AND/OR PROCEDURES SHALL PROVIDE FOR ADEQUATE TRENCH EXCAVATION SAFETY PROTECTION THAT COMPLY WITH AS A MINIMUM, OSHA STANDARDS FOR TRENCH EXCAVATIONS. SPECIFICALLY, CONTRACTOR AND/OR CONTRACTOR'S INDEPENDENTLY RETAINED EMPLOYEE OR SAFETY CONSULTANT SHALL IMPLEMENT A TRENCH SAFETY PROGRAM IN ACCORDANCE WITH OSHA STANDARDS GOVERNING THE PRESENCE AND ACTIVITIES OF INDIVIDUALS WORKING IN AND AROUND TRENCH EXCAVATION.

CAUTION!!

CONTRACTOR SHALL BE REQUIRED TO LOCATE ALL PUBLIC OR PRIVATE UTILITIES INCLUDING BUT NOT LIMITING TO: WATER, SEWER, TELEPHONE AND FIBER OPTIC LINES, SITE LIGHTING ELECTRIC, SECONDARY ELECTRIC, PRIMARY ELECTRICAL DUCTBANKS, LANDSCAPE IRRIGATION FACILITIES, AND GAS LINES. ANY UTILITY CONFLICTS THAT ARISE SHOULD BE COMMUNICATED TO THE ENGINEER IMMEDIATELY AND PRIOR TO CONSTRUCTION. THE CONTRACTOR SHALL CONTACT 1–800–DIG–TESS A MINIMUM OF 48 HOURS PRIOR TO THE START OF CONSTRUCTION. ANY DAMAGE TO EXISTING UTILITIES SHALL BE THE SOLE RESPONSIBILITY OF THE CONTRACTOR AND THE REPAIR SHALL BE AT CONTRACTOR'S SOLE EXPENSE WHETHER THE UTILITY IS SHOWN ON THESE PLANS OR NOT.

NO.	REVISION	DATE

STATE OF TEXAS
JON D. ADAME
82567
LICENSED PROFESSIONAL ENGINEER
3-30-23

PAPE-DAWSON ENGINEERS
SAN ANTONIO I AUSTIN I HOUSTON I FORT WORTH I DALLAS
2000 NW LOOP 410 I SAN ANTONIO, TX 78213 I 210.375.9000
TEXAS ENGINEERING FIRM #470 I TEXAS SURVEYING FIRM #10028800

SMILEY TRACT UNIT 1

SAN ANTONIO, TEXAS

DRAIN D STA. 1+00.00 TO 4+00.00
PLAN & PROFILE

PLAT NO. 22-11800482
JOB NO. 11100–97
DATE MARCH 2023
DESIGNER AA
CHECKED VS DRAWN AA
SHEET C1.13

Date: Mar 30, 2023, 5:03pm User ID: aatry
File: P:\111\00\97\Design\Civil\SDD1–1100097.dwg

THIS DOCUMENT HAS BEEN PRODUCED FROM MATERIAL THAT WAS STORED AND/OR TRANSMITTED ELECTRONICALLY AND MAY HAVE BEEN INADVERTENTLY ALTERED. RELY ONLY ON FINAL HARDCOPY MATERIALS BEARING THE CONSULTANT'S ORIGINAL SIGNATURE AND SEAL. AERIAL IMAGERY PROVIDED BY GOOGLE© UNLESS OTHERWISE NOTED. Imagery © 2016,CAPCOG,Digital Globe,Texas Orthoimagery Program, USDA Farm Service Agency.

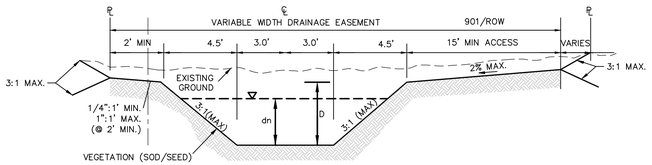

SECTION "A-A" EARTHEN TRAP. CHANNEL

NOT-TO-SCALE

SCALE: 1"= 50'

0' 50' 100' 150'

DRAINAGE LEGEND

PROJECT LIMITS
100 YR FLOODPLAIN
EXISTING CONTOUR — 690
PROPOSED CONTOUR — 690
PROPOSED WATER — W
PROPOSED SEWER — SS
PROPOSED STORM DRAIN
EXISTING STORM DRAIN
FLOW ARROW

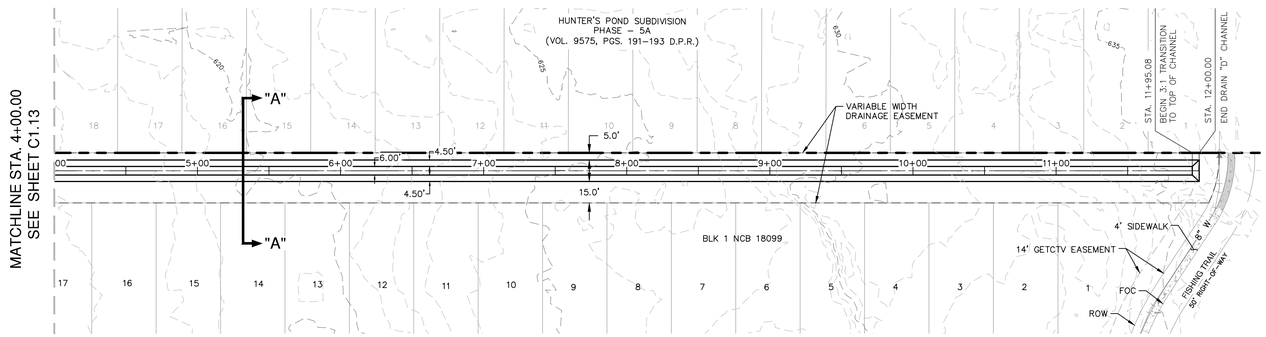

HYDRAULIC CALCULATIONS EARTHEN CHANNEL STA. 2+85.33 TO 4+47.00 (SECTION A-A)	HYDRAULIC CALCULATIONS EARTHEN CHANNEL STA. 4+47.00 TO 6+35.00 (SECTION A-A)	HYDRAULIC CALCULATIONS EARTHEN CHANNEL STA. 6+35.00 TO 8+16.00 (SECTION A-A)
Q25 = 19.40	Q25 = 19.40	Q25 = 19.40
Bw = 6'	Bw = 6'	Bw = 6'
n = 0.035	n = 0.035	n = 0.035
S = 0.50%	S = 1.95%	S = 1.93%
D = 1.50'	D = 1.50'	D = 1.50'
dn = 0.93'	dn = 0.64'	dn = 0.65'
V = 2.35 FPS	V = 3.81 FPS	V = 3.77 FPS
HYDRAULIC CALCULATIONS EARTHEN CHANNEL STA. 8+16.00 TO 9+00.00 (SECTION A-A)	**HYDRAULIC CALCULATIONS EARTHEN CHANNEL STA. 9+00.00 TO 11+00.00 (SECTION A-A)**	**HYDRAULIC CALCULATIONS EARTHEN CHANNEL STA. TO 11+00.00 TO 12+00.00 (SECTION A-A)**
Q25 = 19.40	Q25 = 19.40	Q25 = 19.40
Bw = 6'	Bw = 6'	Bw = 6'
n = 0.035	n = 0.035	n = 0.035
S = 2.98%	S = 2.25%	S = 4.75%
D = 1.50'	D = 1.50'	D = 1.50'
dn = 0.58'	dn = 0.63'	dn = 0.50'
V = 4.37 FPS	V = 3.97 FPS	V = 5.13 FPS

DRAIN "D"
STA. 4+00.00 TO END

VERTICAL SCALE: 1" = 5'
HORIZONTAL SCALE: 1" = 50'

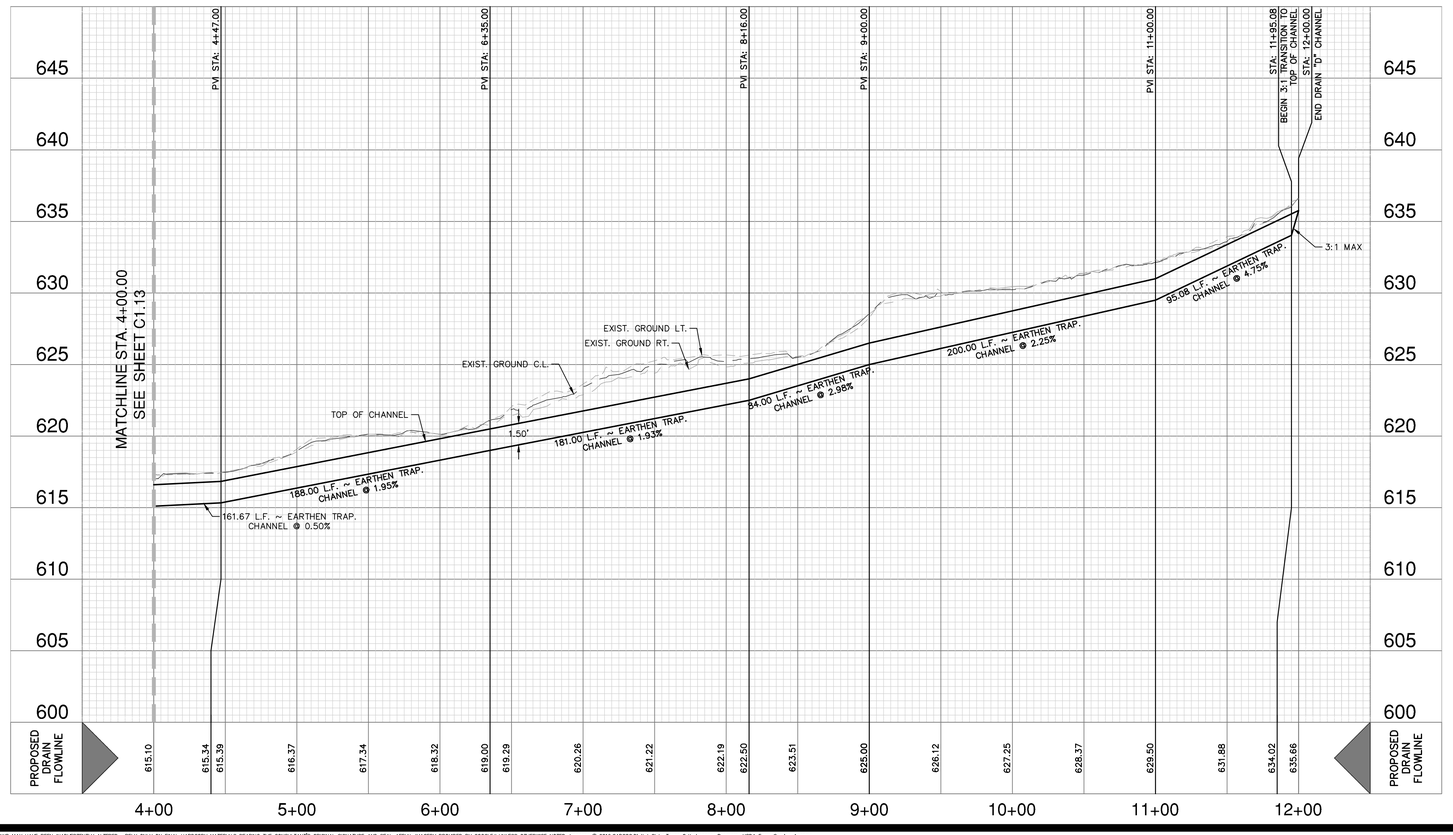

KEY LEGEND

(C) CONCRETE COLLAR (SEE DETAIL SHEET C1.18)

(D) CONTRACTOR TO GROUT BOTTOM OF BOX TO ALLOW FOR POSITIVE DRAINAGE

DRAINAGE & GRADING NOTES:

1. A CITY OF SAN ANTONIO ROW PERMIT MUST BE OBTAINED BEFORE WORKING IN BEXAR COUNTY ROW. CONTRACTOR SHALL COORDINATE A TRAFFIC CONTROL PLAN FOR ALL WORK WITHIN THE ROW. ADDITIONAL WARNING SIGNS MAY BE RECOMMENDED BY THE ENGINEER ONCE THE ROADWAYS ARE CONSTRUCTED.
2. THE CONTRACTOR WILL BE RESPONSIBLE FOR DETERMINING EXACT LOCATION OF ALL UTILITIES AND DRAINAGE STRUCTURES WHETHER SHOWN ON THE PLANS OR NOT. THE CONTRACTOR SHALL UNCOVER EXISTING UTILITIES PRIOR TO CONSTRUCTION TO VERIFY SIZE, GRADE, AND LOCATION. THE CONTRACTOR SHALL NOTIFY THE ENGINEER IMMEDIATELY OF ANY DEVIATIONS FROM PLANS PRIOR TO BEGINNING CONSTRUCTION. ANY DAMAGE TO EXISTING UTILITIES, WHETHER SHOWN ON THE PLANS OR NOT, SHALL BE THE CONTRACTOR'S RESPONSIBILITY TO REPAIR, AT HIS EXPENSE.
3. ALL CONCRETE FOR TXDOT DRAINAGE STRUCTURES SHALL MEET TXDOT SPECIFICATIONS. ALL OTHER CONCRETE SHALL BE CLASS "A" 3000 PSI CYLINDER STRENGTH IN 28 DAYS.
4. REFERENCE DRAINAGE DETAILS FOR PIPE TRENCH DETAILS, BOX CULVERT, HEADWALL, AND WINGWALL CONSTRUCTION DETAILS, AND BOX CULVERT BEDDING AND EXCAVATION LIMITS.
5. CONTRACTOR SHALL GROUT ALL CURB INLETS AND JUNCTION BOXES TO PROVIDE FOR POSITIVE DRAINAGE.
6. EARTHEN CHANNELS WILL BE VEGETATED BY SEEDING OR SODDING. 85% OF THE CHANNEL SURFACE MUST HAVE ESTABLISHED VEGETATION BEFORE THE CITY OF SAN ANTONIO WILL ACCEPT.
7. CONTRACTOR SHALL MATCH TOP OF CHANNEL TO NATURAL GROUND AND MAINTAIN A MINIMUM CHANNEL DEPTH OF "D" AS SHOWN IN THE PROFILE.

TRENCH EXCAVATION SAFETY PROTECTION:

CONTRACTOR AND/ OR CONTRACTOR'S INDEPENDENTLY RETAINED EMPLOYEE OR STRUCTURAL DESIGN/ GEOTECHNICAL/ SAFETY/EQUIPMENT CONSULTANT, IF ANY, SHALL REVIEW THESE PLANS AND ANY AVAILABLE GEOTECHNICAL INFORMATION AND THE ANTICIPATED INSTALLATION SITES WITHIN THE PROJECT WORK AREA IN ORDER TO IMPLEMENT CONTRACTOR'S TRENCH EXCAVATION SAFETY PROTECTION SYSTEMS, PROGRAMS AND /OR PROCEDURES FOR THE PROJECT DESCRIBED IN THE CONTRACT DOCUMENTS. THE CONTRACTOR'S IMPLEMENTATION OF THESE SYSTEMS, PROGRAMS AND/OR PROCEDURES SHALL PROVIDE FOR ADEQUATE TRENCH EXCAVATION SAFETY PROTECTION THAT COMPLY WITH AS A MINIMUM, OSHA STANDARDS FOR TRENCH EXCAVATIONS. SPECIFICALLY, CONTRACTOR AND/OR CONTRACTOR'S INDEPENDENTLY RETAINED EMPLOYEE OR SAFETY CONSULTANT SHALL IMPLEMENT A TRENCH SAFETY PROGRAM IN ACCORDANCE WITH OSHA STANDARDS GOVERNING THE PRESENCE AND ACTIVITIES OF INDIVIDUALS WORKING IN AND AROUND TRENCH EXCAVATION.

CAUTION!!

CONTRACTOR SHALL BE REQUIRED TO LOCATE ALL PUBLIC OR PRIVATE UTILITIES INCLUDING BUT NOT LIMITING TO: WATER, SEWER, TELEPHONE AND FIBER OPTIC LINES, SITE LIGHTING ELECTRIC, SECONDARY ELECTRIC, PRIMARY ELECTRICAL DUCTBANKS, LANDSCAPE IRRIGATION FACILITIES, AND GAS LINES. ANY UTILITY CONFLICTS THAT ARISE SHOULD BE COMMUNICATED TO THE ENGINEER IMMEDIATELY AND PRIOR TO CONSTRUCTION. THE CONTRACTOR SHALL CONTACT 1-800-DIG-TESS A MINIMUM OF 48 HOURS PRIOR TO THE START OF CONSTRUCTION. ANY DAMAGE TO EXISTING UTILITIES SHALL BE THE SOLE RESPONSIBILITY OF THE CONTRACTOR AND THE REPAIR SHALL BE AT CONTRACTOR'S SOLE EXPENSE WHETHER THE UTILITY IS SHOWN ON THESE PLANS OR NOT.

NO.	REVISION	DATE

STATE OF TEXAS
JON D. ADAME
82567
LICENSED PROFESSIONAL ENGINEER
3-30-23

PAPE-DAWSON ENGINEERS
SAN ANTONIO I AUSTIN I HOUSTON I FORT WORTH I DALLAS
2000 NW LOOP 410 I SAN ANTONIO, TX 78213 I 210.375.9000
TEXAS ENGINEERING FIRM #470 I TEXAS SURVEYING FIRM #10028800

SMILEY TRACT UNIT 1

SAN ANTONIO, TEXAS

DRAIN D STA. 4+00.00 TO END
PLAN & PROFILE

PLAT NO. 22-11800482
JOB NO. 11100-97
DATE MARCH 2023
DESIGNER AA
CHECKED VS DRAWN AA
SHEET C1.14

Date: Mar 30, 2023, 5:03pm User ID: aaty
File: P:\111\00\97\Design\Civil\SSD1-1110097.dwg

THIS DOCUMENT HAS BEEN PRODUCED FROM MATERIAL THAT WAS STORED AND/OR TRANSMITTED ELECTRONICALLY AND MAY HAVE BEEN INADVERTENTLY ALTERED. RELY ONLY ON FINAL HARDCOPY MATERIALS BEARING THE CONSULTANT'S ORIGINAL SIGNATURE AND SEAL. AERIAL IMAGERY PROVIDED BY GOOGLE© UNLESS OTHERWISE NOTED. Imagery © 2016,CAPCOG,Digital Globe,Texas Orthoimagery Program, USDA Farm Service Agency.

TABLE OF DIMENSIONS AND REINFORCING STEEL
(Wings for one structure end)

Maximum Wingwall Height Hw	W	X	Y	Z	Bars J1 Size	Bars J1 Spa	Bars J2 Size	Bars J2 Spa	Estimated Quantities per ft of wing (2~wings) (4) Reinf (Lb/Ft)	Conc (CY/Ft)	Estimated Quantities per ft of Toewall (1~toewall) Reinf (Lb/Ft)	Conc (CY/Ft)
2'-6"	2'-10"	10"	1'-0"	7"	#4	1'-0"	#4	1'-0"	48.64	0.406	6.85	0.071
2'-9"	2'-10"	10"	1'-0"	7"	#4	1'-0"	#4	1'-0"	49.31	0.424	6.85	0.071
3'-0"	2'-10"	10"	1'-0"	7"	#4	1'-0"	#4	1'-0"	49.98	0.444	6.85	0.071
3'-3"	2'-10"	10"	1'-0"	7"	#4	1'-0"	#4	1'-0"	53.32	0.462	6.85	0.071
3'-6"	2'-10"	10"	1'-0"	7"	#4	1'-0"	#4	1'-0"	53.98	0.480	6.85	0.071
4'-0"	3'-2"	1'-2"	1'-0"	7"	#4	1'-0"	#4	1'-0"	55.77	0.532	6.85	0.071
4'-6"	3'-2"	1'-2"	1'-0"	7"	#4	1'-0"	#4	1'-0"	59.77	0.568	6.85	0.071
5'-0"	3'-9"	1'-7"	1'-2"	7"	#4	1'-0"	#4	1'-0"	63.45	0.632	6.96	0.075
5'-6"	3'-9"	1'-7"	1'-2"	7"	#4	1'-0"	#4	1'-0"	67.46	0.668	6.96	0.075
6'-0"	4'-4"	2'-0"	1'-4"	7"	#5	1'-0"	#5	1'-0"	80.67	0.730	7.07	0.078
6'-6"	4'-4"	2'-0"	1'-4"	7"	#5	1'-0"	#5	1'-0"	85.05	0.768	7.07	0.078
7'-0"	5'-0"	2'-3"	1'-9"	8"	#5	1'-0"	#5	1'-0"	92.15	0.864	8.07	0.093
7'-6"	5'-0"	2'-3"	1'-9"	8"	#5	1'-0"	#5	1'-0"	96.54	0.902	8.07	0.093
8'-0"	5'-6"	2'-8"	1'-10"	8"	#5	6"	#5	6"	139.04	0.962	8.13	0.095
8'-6"	5'-6"	2'-8"	1'-10"	8"	#5	6"	#5	6"	144.47	1.000	8.13	0.095
9'-6"	6'-0"	2'-10"	2'-2"	9"	#5	6"	#5	6"	156.93	1.136	8.41	0.110
10'-6"	6'-5"	3'-0"	2'-5"	9"	#6	6"	#5	6"	196.27	1.234	8.57	0.117
11'-6"	7'-2"	3'-6"	2'-8"	11"	#6	6"	#6	6"	230.13	1.438	9.52	0.140
12'-6"	7'-8"	3'-9"	2'-11"	1'-0"	#7	6"	#6	6"	283.41	1.592	9.74	0.157
13'-6"	8'-2"	4'-0"	3'-2"	1'-2"	#8	6"	#6	6"	348.72	1.804	10.02	0.186
14'-6"	8'-10"	4'-5"	3'-5"	1'-4"	#9	6"	#6	6"	432.94	2.046	10.30	0.218
15'-6"	9'-6"	4'-10"	3'-8"	1'-6"	#9	6"	#7	6"	489.52	2.302	11.24	0.253
16'-0"	9'-11"	5'-0"	3'-11"	1'-7"	#9	6"	#7	6"	505.72	2.448	11.47	0.279

TABLE OF WINGWALL REINFORCING
(2~wings)

Bar	Size	No.	Spa
D1	#6	~	1'-0"
D2	#6	~	1'-0"
E1	#4	~	1'-0"
F	#4	~	1'-0"
G	#6	~	8"
M1	#4	4	~
P	#4	~	1'-0"
V	#4	~	1'-0"

TABLE OF TOEWALL REINFORCING

Bar	Size	No.	Spa
J3	#4	~	1'-0"
M2	#4	2	~
E2	#4	~	1'-0"

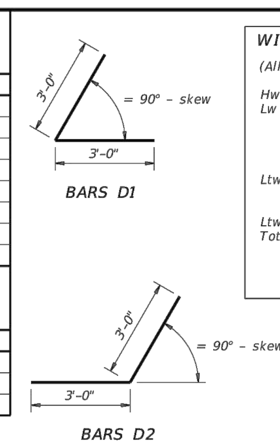

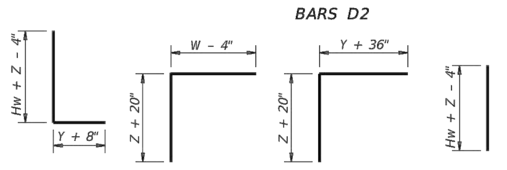

WING DIMENSION FORMULAS:

(All values are in feet.)

Hw = H + T + C
Lw = (Hw) (SL) ÷ cosine (θ) for Type PW-1
= (Hw - 1') (SL) ÷ cosine (θ) for Type PW-2 and Hw ≥ 4'
= (Hw - 0.5') (SL) ÷ cosine (θ) for Type PW-2 and Hw < 4'

For cast-in-place culverts:
Ltw = [(N) (S) + (N + 1) (U)] ÷ cosine (θ)

For precast culverts:
Ltw = [(N) (2 U + S) + (N - 1) (0.5')] ÷ cosine (θ)
Total Wingwall Area (two wings ~ SF)
= (2)(Hw)(Lw) for Type PW-1
= (2)(Hw)(Lw) - 6 SF for Type PW-2 and Hw ≥ 4'
= (2)(Hw)(Lw) - 1.5 SF for Type PW-2 and Hw < 4'

Hw = Height of wingwall
Lw = Length of wingwall
Ltw = Culvert toewall length
N = Number of culvert spans
SL:1 = Channel slope ratio. (horizontal: 1 vertical, usual value is 2:1)
θ = Culvert skew

See applicable box culvert standard sheet for S, H, T, and U values.

(1) Skew = 0°

(2) At discharge end, chamfer may be ¾" minimum.

(3) For 15° skew ~ 1"
For 30° skew ~ 2"
For 45° skew ~ 3"

(4) Quantities shown are for two Type PW-1 wings. Adjust concrete volume for Type PW-2 wings. To determine estimated quantities for two wings, multiply the tabulated values by Lw. Quantities shown do not include weight of Bars D.

(5) Provide weepholes for Hw = 5'-0" and greater. Fill around weepholes with coarse gravel.

(6) Extend Bars E2 1'-6" minimum into the wingwall footing.

(7) Lap Bars M1 1'-6" minimum with Bars M2.

(8) Place Bars G as shown, equally spaced at 8" maximum. Provide at least two pairs of Bars G per wing.

(9) 0" Min to 5'-0" Max. Estimated curb heights are shown elsewhere in the plans. For structures with pedestrian rail or curbs taller than 1'-0, refer to the Extended Curb Details (ECD) standard sheet. For structures with T631 or T631LS bridge rail, refer to the Mounting Details for T631 & T631LS Rails (T631-CM) standard sheet. Refer to the Box Culvert Rail Mounting Details (RAC) standard sheet for structures with bridge rail other than T631 or T631LS.

(10) For vehicle safety, the following requirements must be met:
- For structures without bridge rail, construct curbs no more than 3" above finished grade.
- For structures with bridge rail, construct curbs flush with finished grade.

Reduce curb heights, if necessary, to meet the above requirements. No changes will be made in quantities and no additional compensation will be allowed for this work.

(11) 1'-0" typical. 2'-3" when the Box Culvert Rail Mounting Details (RAC) standard sheet is referred to elswhere in the plans.

(12) 3'-0" for Hw < 4'.

(13) 6" for Hw < 4'.

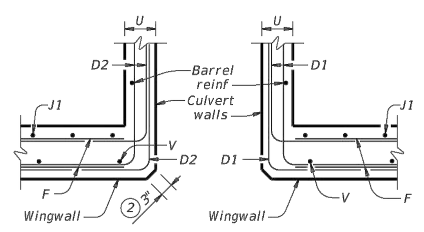

SECTION C-C - PW-1

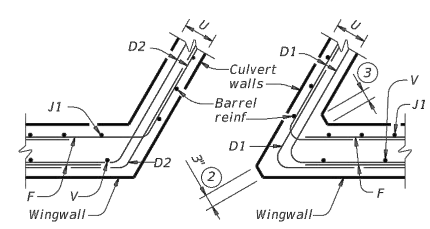

SECTION C-C - PW-2

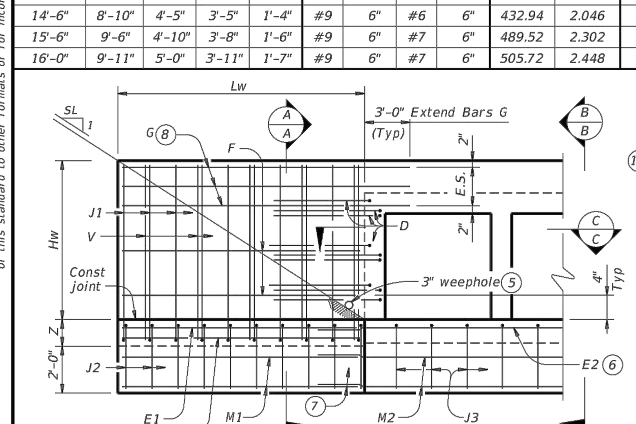

PARTIAL ELEVATION - PW-1

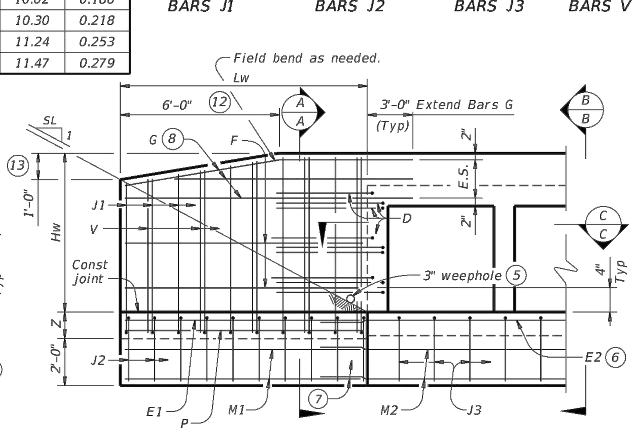

PARTIAL ELEVATION - PW-2

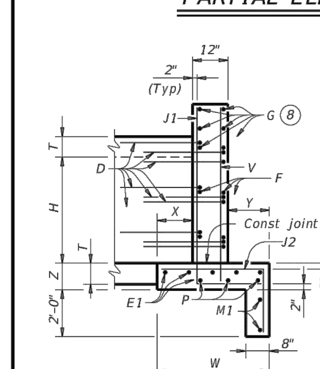

SECTION A-A

(Showing wing reinforcement.)

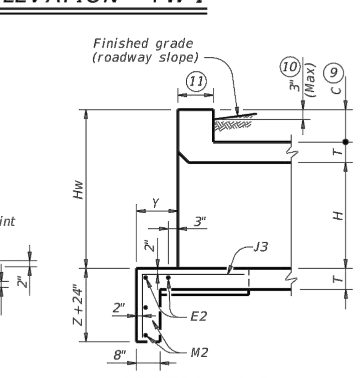

SECTION B-B

(Showing wing reinforcement.)

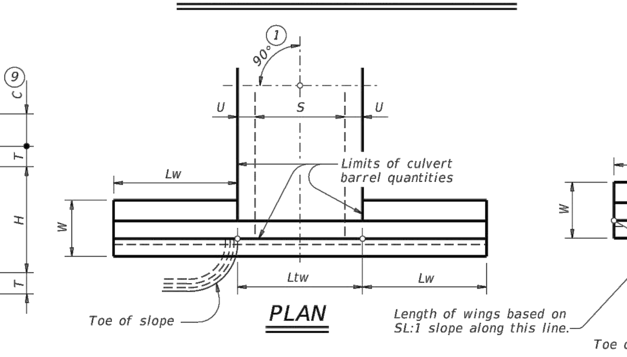

DETAILS FOR NON-SKEWED BOX CULVERTS

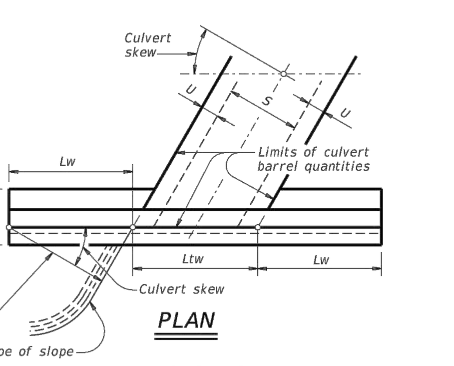

DETAILS FOR SKEWED BOX CULVERTS

(Showing 30° skew.)

DESIGNER NOTES:
Type PW-1 can be used for all applications and must be used if railing is to be mounted to the wingwall.
Type PW-2 can only be used for applications without a railing mounted to the wingwall.

MATERIAL NOTES:
Provide Class C concrete (f'c=3,600 psi).
Provide Grade 60 reinforcing steel.
Provide galvanized reinforcing steel if required elsewhere in the plans.

GENERAL NOTES:
Designed in accordance with AASHTO LRFD Bridge Design Specifications.
Depth of toewalls for wingwalls and culverts may be reduced or eliminated when founded on solid rock, when directed by the Engineer.
See Box Culvert Supplement (BCS) standard sheet for wingwall type and additional dimensions and information.
Quantities for concrete and reinforcing steel resulting from the formulas given on this sheet are for the Contractor's information only.

Cover dimensions are clear dimensions, unless noted otherwise. Reinforcing dimensions are out-to-out of bars.

Texas Department of Transportation — Bridge Division Standard

CONCRETE WINGWALLS
WITH PARALLEL WINGS FOR
BOX CULVERTS
TYPES PW-1 AND PW-2

PW

FILE: pwstde01-20.dgn	DN: GAF	CK: CAT	DW: TxDOT	CK: TxDOT
©TxDOT February 2020	CONT	SECT	JOB	HIGHWAY
REVISIONS	DIST	COUNTY		SHEET NO.

DISCLAIMER:
The use of this standard is governed by the "Texas Engineering Practice Act". No warranty of any kind is made by TxDOT for any purpose whatsoever. TxDOT assumes no responsibility for the conversion of this standard to other formats or for incorrect results or damages resulting from its use.

DATE:
FILE:

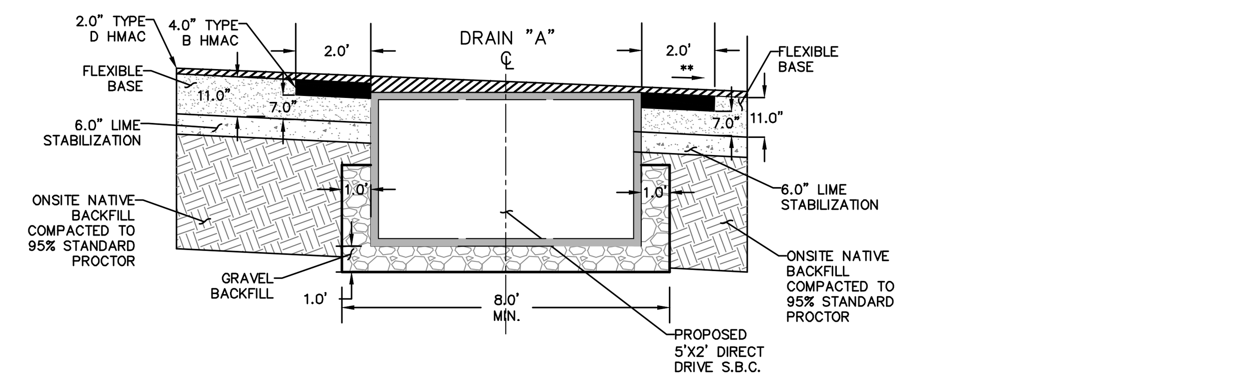

DRAIN "A"MODIFIED ROAD SECTION (FISHING TRAIL)

NOT-TO-SCALE

**SEE SHEET C2.03
(FISHING TRAIL)
FOR STREET DESIGN

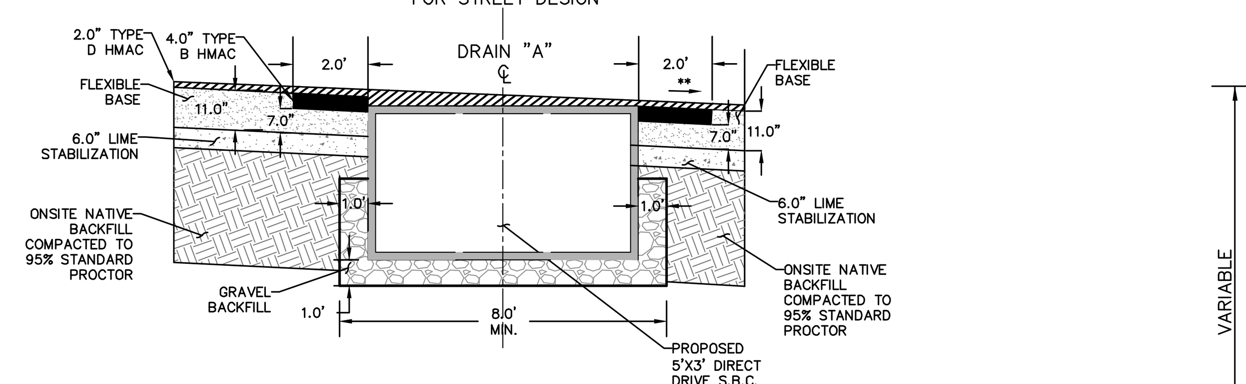

DRAIN "A"MODIFIED ROAD SECTION (WHITE BASS DRIVE)

NOT-TO-SCALE

**SEE SHEET C2.01
(WHITE BASS DRIVE)
FOR STREET DESIGN

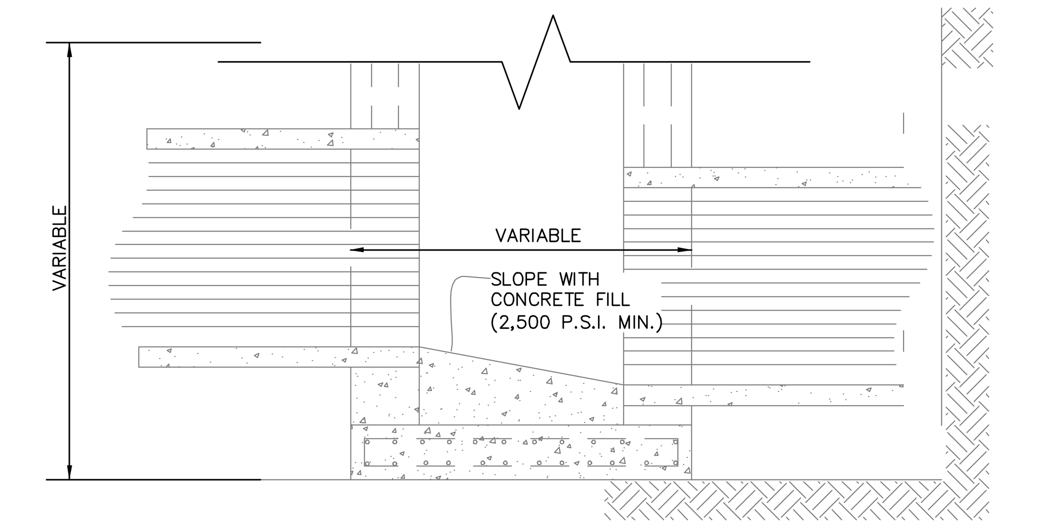

GROUTED INVERT DETAIL

NOT-TO-SCALE

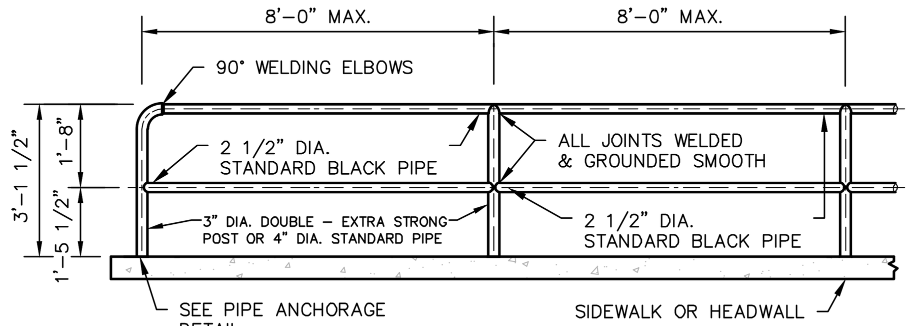

NOTES:
1. FOR CONSTRUCTION WITHIN THE CITY OF SAN ANTONIO ETJ AND/OR BEXAR COUNTY, PIPE SHALL BE STANDARD BLACK PIPE PAINTED WITH 1 COAT OF RED PRIMER AND 2 COATS OF ALUMINUM PAINT

PIPE RAILING DETAIL

NOT-TO-SCALE

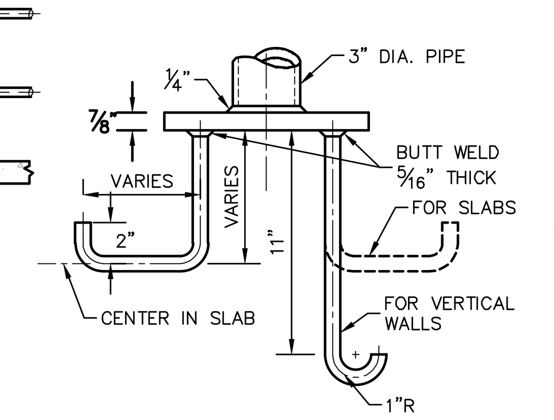

PIPE ANCHORAGE DETAIL

NOT-TO-SCALE

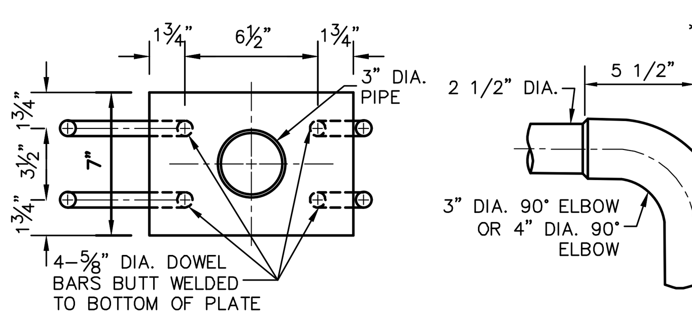

* A NEAT END SECTION, SATISFACTORY TO THE ENGINEER, FROM SUBMITTED SHOP DRAWINGS, MAY BE USED IN LIEU OF THE 90 DEGREE WELDING ELBOW SHOWN.

90° WELDING ELBOWS DETAIL

NOT-TO-SCALE

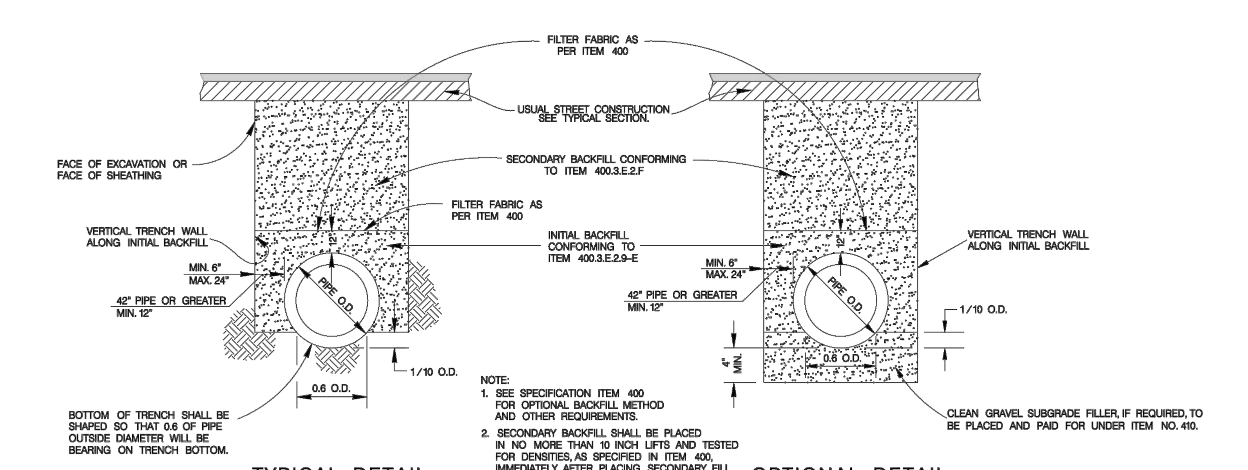

PIPE BEDDING & BACKFILL DETAILS

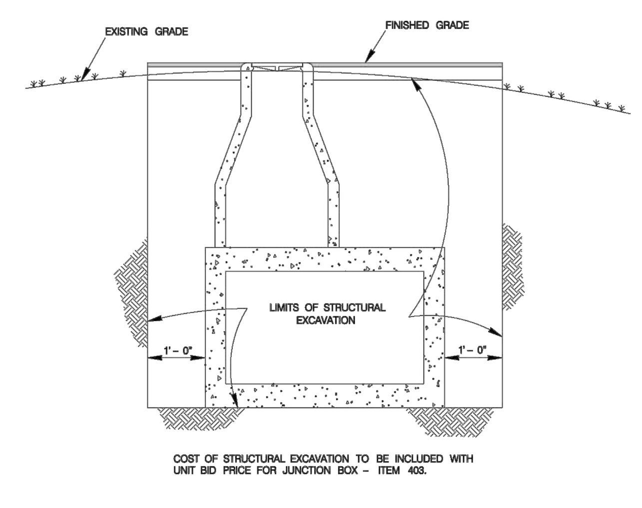

STRUCTURAL EXCAVATION AT JUNCTION BOXES

NO SCALE

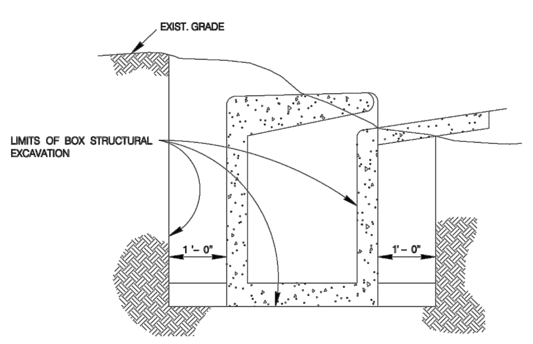

SIDE VIEW

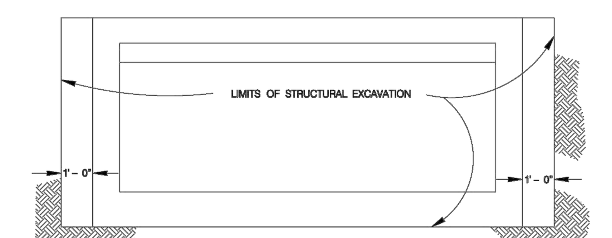

ELEVATION

COST OF STRUCTURAL EXCAVATION TO BE INCLUDED WITH UNIT BID PRICE FOR INLETS - ITEM 403.

STRUCTURAL EXCAVATIONS
AT DRAINAGE INLETS

NO SCALE

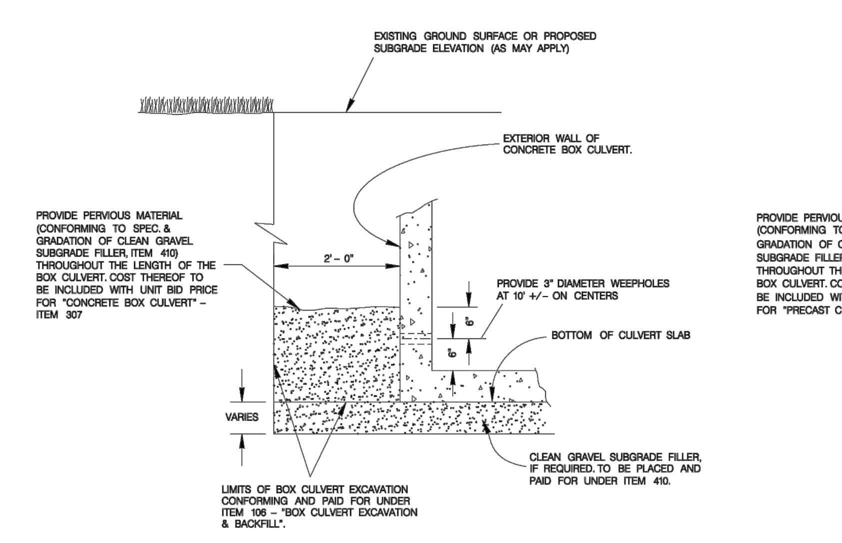

CAST-IN-PLACE BOX CULVERT

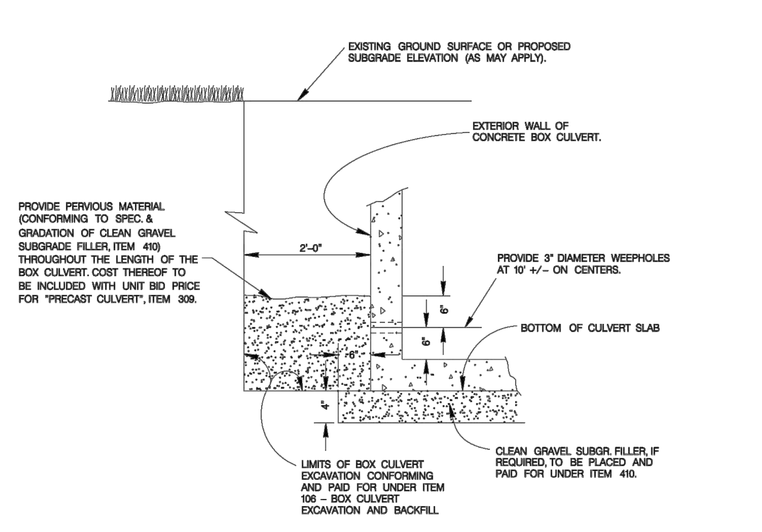

PRECAST BOX CULVERT

CONCRETE BOX CULVERT

MAY 2009

CITY OF SAN ANTONIO
CAPITAL IMPROVEMENTS MANAGEMENT SERVICES DEPARTMENT

PIPE BEDDING & MISCELLANEOUS
DRAINAGE DETAILS

____% SUBMITTAL	PROJECT NO.:____		DATE:____
DRWN. BY:____	DSGN. BY:____	CHKD. BY:____	SHEET NO.:____OF____

BOX DATA

S (ft.)	H (ft.)	TT (in.)	TB (in.)	TS (in.)	Fill Height (ft.)	M (Min) (in.)	AS1	AS2	AS3	AS4	AS5	AS7	AS8	(1) Lift Weight (tons)
5	2	8	7	6	< 2	-	0.19	0.27	0.18	0.14	0.19	0.19	0.17	6.0
5	2	6	6	6	2 < 3	44	0.22	0.20	0.16	0.14	-	-	-	5.1
5	2	6	6	6	3 - 5	44	0.16	0.14	0.14	0.14	-	-	-	5.1
5	2	6	6	6	10	36	0.15	0.14	0.14	0.14	-	-	-	5.1
5	2	6	6	6	15	36	0.20	0.18	0.18	0.14	-	-	-	5.1
5	2	6	6	6	20	36	0.26	0.23	0.24	0.14	-	-	-	5.1
5	2	6	6	6	25	36	0.33	0.29	0.29	0.14	-	-	-	5.1
5	2	6	6	6	30	36	0.39	0.34	0.35	0.14	-	-	-	5.1
5	3	8	7	6	< 2	-	0.19	0.31	0.21	0.14	0.19	0.19	0.17	6.6
5	3	6	6	6	2 < 3	45	0.18	0.24	0.19	0.14	-	-	-	5.7
5	3	6	6	6	3 - 5	36	0.14	0.17	0.16	0.14	-	-	-	5.7
5	3	6	6	6	10	36	0.14	0.16	0.17	0.14	-	-	-	5.7
5	3	6	6	6	15	35	0.16	0.21	0.22	0.14	-	-	-	5.7
5	3	6	6	6	20	35	0.21	0.27	0.28	0.14	-	-	-	5.7
5	3	6	6	6	25	35	0.26	0.34	0.34	0.14	-	-	-	5.7
5	3	6	6	6	30	35	0.31	0.41	0.41	0.14	-	-	-	5.7
5	4	8	7	6	< 2	-	0.19	0.33	0.24	0.14	0.19	0.19	0.17	7.2
5	4	6	6	6	2 < 3	45	0.16	0.27	0.22	0.14	-	-	-	6.3
5	4	6	6	6	3 - 5	45	0.14	0.19	0.18	0.14	-	-	-	6.3
5	4	6	6	6	10	36	0.14	0.18	0.18	0.14	-	-	-	6.3
5	4	6	6	6	15	35	0.14	0.23	0.24	0.14	-	-	-	6.3
5	4	6	6	6	20	35	0.17	0.30	0.31	0.14	-	-	-	6.3
5	4	6	6	6	25	35	0.21	0.37	0.38	0.14	-	-	-	6.3
5	4	6	6	6	30	35	0.25	0.44	0.45	0.14	-	-	-	6.3
5	5	8	7	6	< 2	-	0.19	0.35	0.26	0.14	0.19	0.19	0.17	7.8
5	5	6	6	6	2 < 3	45	0.14	0.29	0.24	0.14	-	-	-	6.9
5	5	6	6	6	3 - 5	45	0.14	0.21	0.20	0.14	-	-	-	6.9
5	5	6	6	6	10	45	0.14	0.19	0.20	0.14	-	-	-	6.9
5	5	6	6	6	15	36	0.14	0.24	0.25	0.14	-	-	-	6.9
5	5	6	6	6	20	35	0.15	0.31	0.32	0.14	-	-	-	6.9
5	5	6	6	6	25	35	0.18	0.38	0.39	0.14	-	-	-	6.9
5	5	6	6	6	30	35	0.21	0.46	0.47	0.14	-	-	-	6.9

SECTION DIMENSIONS: S, H, TT, TB, TS. REINFORCING (sq. in. / ft.) (2): AS1–AS8.

(1) For box length = 8'-0"

(2) AS1 thru AS4, AS7 and AS8 are minimum required areas of reinforcement per linear foot of box length. AS5 is minimum required area of reinforcement per linear foot of box width.

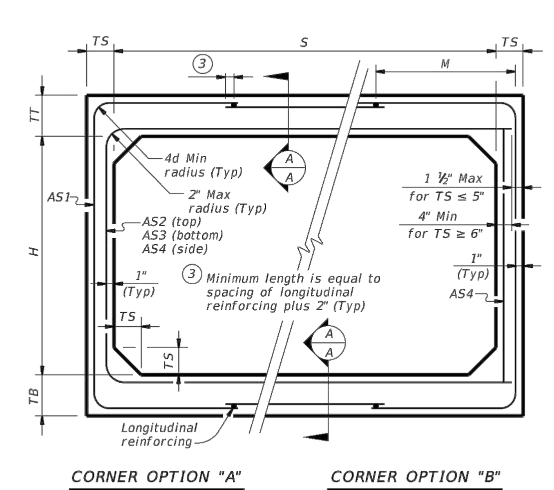

FILL HEIGHT 2 FT AND GREATER

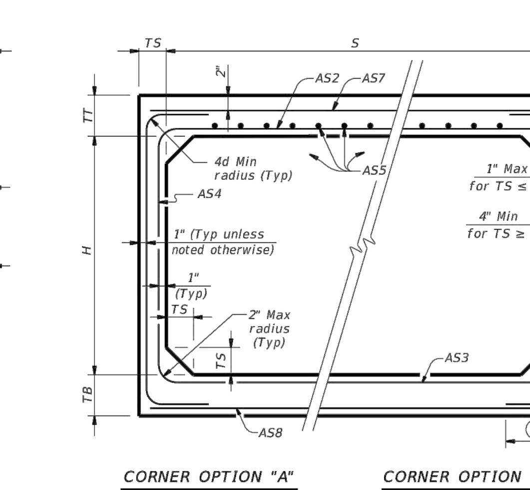

FILL HEIGHT LESS THAN 2 FT

(4) Length is equal to spacing of longitudinal reinforcing plus 2". (10" Min) (Typ)

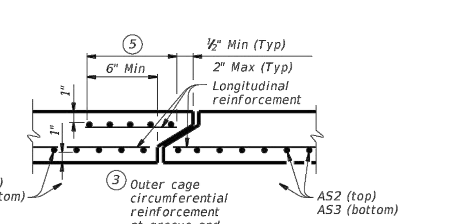

SECTION A-A

(Showing top and bottom slab joint reinforcement.)

MATERIAL NOTES:
Provide 0.03 sq. in./ft. minimum longitudinal reinforcement at each face in slabs and walls. This minimum requirement may be met by the transverse wires when wire mesh reinforcement is used.
Provide Class H concrete (f`c = 5,000 psi).

GENERAL NOTES:
Designs shown conform to ASTM C1577. Refer to ASTM C1577 for information or details not shown.
See Box Culverts Precast Miscellaneous Details (SCP-MD) standard sheet for details and notes not shown.
In lieu of furnishing the designs shown on this sheet, the contractor may furnish an alternate design that is equal to or exceeds the box design for the design fill height in the table. Submit shop plans for alternate designs in accordance with Item "Precast Concrete Structural Members (Fabrication)".

HL93 LOADING

Texas Department of Transportation — Bridge Division Standard

SINGLE BOX CULVERTS
PRECAST
5'-0" SPAN

SCP-5

FILE: scp05sts-20.dgn	DN: TxDOT	CK: TxDOT	DW: TxDOT	CK: TxDOT
©TxDOT February 2020	CONT	SECT	JOB	HIGHWAY
REVISIONS	DIST	COUNTY		SHEET NO.

DISCLAIMER:
The use of this standard is governed by the "Texas Engineering Practice Act". No warranty of any kind is made by TxDOT for any purpose whatsoever. TxDOT assumes no responsibility for the conversion of this standard to other formats or for incorrect results or damages resulting from its use.

DATE:
FILE:

NO.	REVISION	DATE

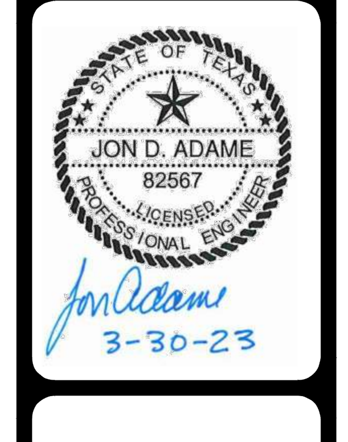

PAPE-DAWSON ENGINEERS

SAN ANTONIO I AUSTIN I HOUSTON I FORT WORTH I DALLAS
2000 NW LOOP 410 I SAN ANTONIO, TX 78213 I 210.375.9000
TEXAS ENGINEERING FIRM #470 I TEXAS SURVEYING FIRM #10028800

SMILEY TRACT UNIT 1
SAN ANTONIO, TEXAS

DRAINAGE DETAILS

PLAT NO. 22-11800482
JOB NO. 11100-97
DATE MARCH 2023
DESIGNER AA
CHECKED VS DRAWN AA
SHEET C1.15

Date: Mar 30, 2023, 5:03pm User ID: aatry
File: P:\111\00\97\Design\Civil\SDDT-1110097.dwg

THIS DOCUMENT HAS BEEN PRODUCED FROM MATERIAL THAT WAS STORED AND/OR TRANSMITTED ELECTRONICALLY AND MAY HAVE BEEN INADVERTENTLY ALTERED. RELY ONLY ON FINAL HARDCOPY MATERIALS BEARING THE CONSULTANT'S ORIGINAL SIGNATURE AND SEAL. AERIAL IMAGERY PROVIDED BY GOOGLE© UNLESS OTHERWISE NOTED. Imagery © 2016,CAPCOG,Digital Globe,Texas Orthoimagery Program, USDA Farm Service Agency.

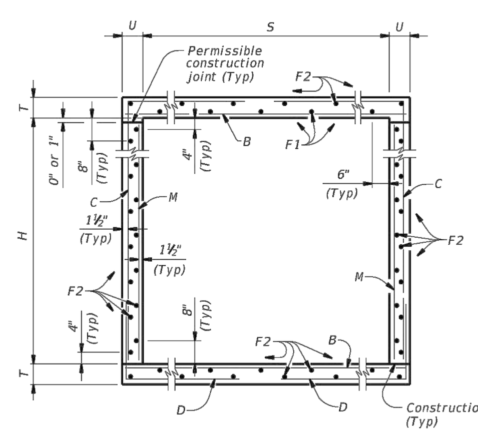

TYPICAL SECTION

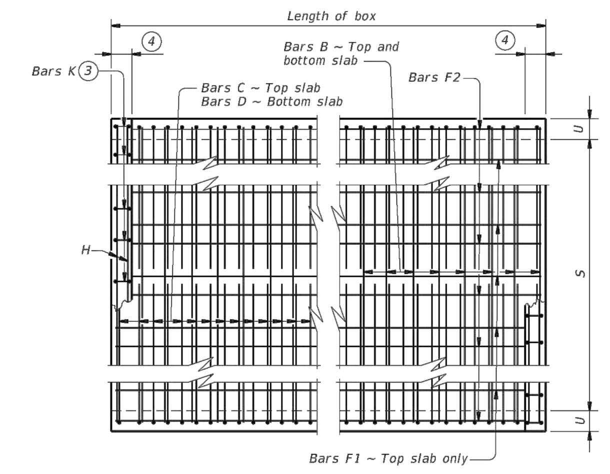

PLAN OF REINF STEEL

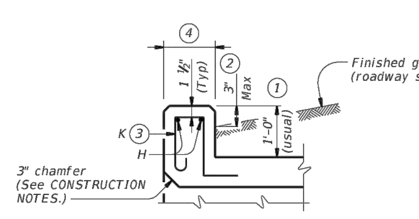

SECTION THRU CURB

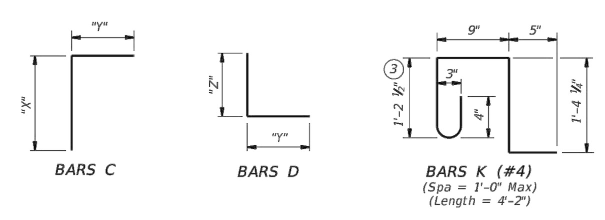

① 0" Min to 5'-0" Max. Estimated curb heights are shown elsewhere in the plans. For structures with pedestrian rail or curbs taller than 1'-0", refer to the Extended Curb Details (ECD) standard sheet. For structures with T631 or T631LS bridge rail, refer to the Mounting Details for T631 & T631LS Rails (T631-CM) standard sheet. Refer to the Rail Anchorage Curb (RAC) standard sheet for structures with bridge rail other than T631 or T631LS.

② For vehicle safety, the following requirements must be met:
- For structures without bridge rail, construct curbs no more than 3" above finished grade.
- For structures with bridge rail, construct curbs flush with finished grade.

Reduce curb heights, if necessary, to meet the above requirements. No changes will be made in quantities and no additional compensation will be allowed for this work.

③ For curbs less than 1'-0" high, tilt Bars K or reduce bar height as necessary to maintain cover. For curbs less than 3" high, Bars K may be omitted.

④ 1'-0" typical. 2'-3" when the Rail Anchorage Curb (RAC) standard sheet is referred to elsewhere in the plans.

The Contractor may replace Bars B, C, D, E, F1, F2, M, Y, and/or Z with deformed welded wire reinforcement (WWR) meeting the requirements of ASTM A1064. The area of required reinforcement may be reduced by the ratio of 60 ksi / 70 ksi. Spacing of WWR is limited to 4" Min and 18" Max. When required, provide lap splices in the WWR of the same length required for the equivalent bar size, rounded up for wire sizes between conventional bar sizes. The lap length required for WWR is never less than the lap length required for uncoated #4 bars.

Example conversion: Replacing No. 6 Gr 60 at 6" Spacing with WWR.
Required WWR = (0.44 sq. in. per 0.5 ft.) x (60 ksi / 70 ksi) = 0.755 sq. in. per ft.
If D30.6 wire is used to meet the 0.755 sq. in. per ft. requirement in this example, the required spacing = (0.306 sq. in.) / (0.755 sq. in. per ft.) x (12 in. per ft.) = 4.86" Max spacing. Required lap length for the provided D30.6 wire is 2'-1" (the same minimum lap length required for uncoated #5 bars, as listed under MATERIAL NOTES).

CONSTRUCTION NOTES:
Do not use permanent forms.
Chamfer the bottom edge of the top slab 3" at the entrance.
Optionally, raise construction joints shown at the flow line by a maximum of 6". If this option is taken, Bars M may be cut off or raised, Bars C and D may be reversed.

MATERIAL NOTES:
Provide Grade 60 reinforcing steel.
Provide galvanized reinforcing steel if required elsewhere in the plans.
Provide Class C concrete (f'c = 3,600 psi) for culvert barrel and curb, with the following exceptions: provide Class S concrete (f'c = 4,000 psi) for top slabs of:
- culverts with overlay,
- culverts with 1-to-2 course surface treatment, or
- culverts with the top slab as the final riding surface.

Provide bar laps, where required, as follows:
- Uncoated or galvanized ~ #4 = 1'-8" Min
- Uncoated or galvanized ~ #5 = 2'-1" Min
- Uncoated or galvanized ~ #6 = 2'-6" Min

GENERAL NOTES:
Designed according to AASHTO LRFD Bridge Design Specifications for the range of fill heights shown.
See the Single Box Culverts Cast-In-Place Miscellaneous Detail (SCC-MD) standard sheet for details pertaining to skewed ends, angle sections, and lengthening.

Cover dimensions are clear dimensions, unless noted otherwise.
Reinforcing bar dimensions shown are out-to-out of bar.

DISCLAIMER: The use of this standard is governed by the "Texas Engineering Practice Act". No warranty of any kind is made by TxDOT for any purpose whatsoever. TxDOT assumes no responsibility for the conversion of this standard to other formats or for incorrect results or damages resulting from its use.

HL93 LOADING — SHEET 1 OF 2

Texas Department of Transportation — Bridge Division Standard

SINGLE BOX CULVERTS
CAST-IN-PLACE
0' TO 30' FILL

SCC-5 & 6

FILE: scc56ste-21.dgn | DN: TBE | CK: BMP | DW: TxDOT | CK: TxDOT
©TxDOT February 2020 | CONT | SECT | JOB | HIGHWAY
REVISIONS: 04/2021 Updated X values. | DIST | COUNTY | SHEET NO.

BILLS OF REINFORCING STEEL (For Box Length = 40 feet) / QUANTITIES

S	H	T	U	Fill Height ⑤	Bars B No.	Bars B Size	Bars B Spa	Bars B Length	Bars B Weight	Bars C No.	Bars C Size	Bars C Spa	Bars C Length	Bars C Weight	Bars C "X"	Bars C "Y"	Bars D No.	Bars D Size	Bars D Spa	Bars D Length	Bars D Weight	Bars D "Y"	Bars D "Z"	Bars M ~ #4 No.	Bars M Spa	Bars M Length	Bars M Weight	Bars F1 ~ #4 at 18" Spa No.	Bars F1 Length	Bars F1 Wt	Bars F2 ~ #4 at 18" Spa No.	Bars F2 Length	Bars F2 Weight	Bars H 4 ~ #4 Length	Bars H Wt	Bars K No.	Bars K Wt	Per Foot of Barrel Conc (CY)	Per Foot of Barrel Reinf (Lb)	Curb Conc (CY)	Curb Reinf (Lb)	Total Conc (CY)	Total Reinf (Lb)
5'-0"	2'-0"	8"	7"	26'	108	#6	9"	5'-11"	960	108	#5	9"	6'-3"	704	2'-6"	3'-9"	108	#5	9"	6'-5"	723	3'-9"	2'-8"	108	9"	2'-0"	144	4	39'-9"	106	22	39'-9"	584	5'-11"	16	14	39	0.391	80.5	0.5	55	16.1	3,276
5'-0"	2'-0"	9"	7"	30'	108	#6	9"	5'-11"	960	108	#5	9"	6'-4"	713	2'-7"	3'-9"	108	#5	9"	6'-6"	732	3'-9"	2'-9"	108	9"	2'-0"	144	4	39'-9"	106	22	39'-9"	584	5'-11"	16	14	39	0.429	81.0	0.5	55	17.6	3,294
5'-0"	3'-0"	8"	7"	26'	108	#6	9"	5'-11"	960	108	#5	9"	7'-3"	817	3'-6"	3'-9"	108	#5	9"	6'-5"	723	3'-9"	2'-8"	108	9"	3'-0"	216	4	39'-9"	106	26	39'-9"	690	5'-11"	16	14	39	0.434	87.8	0.5	55	17.8	3,567
5'-0"	3'-0"	9"	7"	30'	108	#6	9"	5'-11"	960	108	#5	9"	7'-4"	826	3'-7"	3'-9"	108	#5	9"	6'-6"	732	3'-9"	2'-9"	108	9"	3'-0"	216	4	39'-9"	106	26	39'-9"	690	5'-11"	16	14	39	0.472	88.3	0.5	55	19.3	3,585
5'-0"	4'-0"	8"	7"	26'	108	#6	9"	5'-11"	960	108	#5	9"	8'-3"	929	4'-6"	3'-9"	108	#5	9"	6'-5"	723	3'-9"	2'-8"	108	9"	4'-0"	289	4	39'-9"	106	26	39'-9"	690	5'-11"	16	14	39	0.477	92.4	0.5	55	19.5	3,752
5'-0"	4'-0"	9"	7"	30'	108	#6	9"	5'-11"	960	108	#5	9"	8'-4"	939	4'-7"	3'-9"	108	#5	9"	6'-6"	732	3'-9"	2'-9"	108	9"	4'-0"	289	4	39'-9"	106	26	39'-9"	690	5'-11"	16	14	39	0.515	92.9	0.5	55	21.1	3,771
5'-0"	5'-0"	8"	7"	26'	108	#6	9"	5'-11"	960	108	#5	9"	9'-3"	1,042	5'-6"	3'-9"	108	#5	9"	6'-5"	723	3'-9"	2'-8"	108	9"	5'-0"	361	4	39'-9"	106	30	39'-9"	797	5'-11"	16	14	39	0.521	99.7	0.5	55	21.3	4,044
5'-0"	5'-0"	9"	7"	30'	108	#6	9"	5'-11"	960	108	#5	9"	9'-4"	1,051	5'-7"	3'-9"	108	#5	9"	6'-6"	732	3'-9"	2'-9"	108	9"	5'-0"	361	4	39'-9"	106	30	39'-9"	797	5'-11"	16	14	39	0.559	100.2	0.5	55	22.8	4,062
6'-0"	2'-0"	8"	7"	20'	108	#6	9"	6'-11"	1,122	108	#5	9"	6'-7"	742	2'-6"	4'-1"	108	#5	9"	6'-9"	760	4'-1"	2'-8"	108	9"	2'-0"	144	5	39'-9"	133	25	39'-9"	664	6'-11"	18	16	45	0.440	89.1	0.5	63	18.1	3,628
6'-0"	2'-0"	9"	7"	26'	108	#6	9"	6'-11"	1,122	162	#5	6"	6'-8"	1,126	2'-7"	4'-1"	162	#5	6"	6'-10"	1,155	4'-1"	2'-9"	108	9"	2'-0"	144	5	39'-9"	133	25	39'-9"	664	6'-11"	18	16	45	0.485	108.6	0.5	63	19.9	4,407
6'-0"	2'-0"	10"	8"	30'	108	#6	9"	7'-1"	1,149	162	#5	6"	6'-10"	1,155	2'-8"	4'-2"	162	#5	6"	7'-0"	1,183	4'-2"	2'-10"	82	12"	2'-0"	110	5	39'-9"	133	25	39'-9"	664	7'-1"	19	18	50	0.551	109.9	0.5	69	22.6	4,463
6'-0"	3'-0"	8"	7"	20'	108	#6	9"	6'-11"	1,122	108	#5	9"	7'-7"	854	3'-6"	4'-1"	108	#5	9"	6'-9"	760	4'-1"	2'-8"	108	9"	3'-0"	216	5	39'-9"	133	29	39'-9"	770	6'-11"	18	16	45	0.484	96.4	0.5	63	19.9	3,918
6'-0"	3'-0"	9"	7"	26'	108	#6	9"	6'-11"	1,122	162	#5	6"	7'-8"	1,295	3'-7"	4'-1"	162	#5	6"	6'-10"	1,155	4'-1"	2'-9"	108	9"	3'-0"	216	5	39'-9"	133	29	39'-9"	770	6'-11"	18	16	45	0.528	117.3	0.5	63	21.6	4,754
6'-0"	3'-0"	10"	8"	30'	108	#6	9"	7'-1"	1,149	162	#5	6"	7'-10"	1,324	3'-8"	4'-2"	162	#5	6"	7'-0"	1,183	4'-2"	2'-10"	82	12"	3'-0"	164	5	39'-9"	133	29	39'-9"	770	7'-1"	19	18	50	0.601	118.1	0.5	69	24.6	4,792
6'-0"	4'-0"	8"	7"	20'	108	#6	9"	6'-11"	1,122	108	#5	9"	8'-7"	967	4'-6"	4'-1"	108	#5	9"	6'-9"	760	4'-1"	2'-8"	108	9"	4'-0"	289	5	39'-9"	133	29	39'-9"	770	6'-11"	18	16	45	0.527	101.0	0.5	63	21.6	4,104
6'-0"	4'-0"	9"	7"	26'	108	#6	9"	6'-11"	1,122	162	#5	6"	8'-8"	1,464	4'-7"	4'-1"	162	#5	6"	6'-10"	1,155	4'-1"	2'-9"	108	9"	4'-0"	289	5	39'-9"	133	29	39'-9"	770	6'-11"	18	16	45	0.571	123.3	0.5	63	23.4	4,996
6'-0"	4'-0"	10"	8"	30'	108	#6	9"	7'-1"	1,149	162	#5	6"	8'-10"	1,493	4'-8"	4'-2"	162	#5	6"	7'-0"	1,183	4'-2"	2'-10"	82	12"	4'-0"	219	5	39'-9"	133	29	39'-9"	770	7'-1"	19	18	50	0.650	123.7	0.5	69	26.5	5,016
6'-0"	5'-0"	8"	7"	20'	108	#6	9"	6'-11"	1,122	108	#5	9"	9'-7"	1,080	5'-6"	4'-1"	108	#5	9"	6'-9"	760	4'-1"	2'-8"	108	9"	5'-0"	361	5	39'-9"	133	33	39'-9"	876	6'-11"	18	16	45	0.570	108.3	0.5	63	23.3	4,395
6'-0"	5'-0"	9"	7"	26'	108	#6	9"	6'-11"	1,122	162	#5	6"	9'-8"	1,633	5'-7"	4'-1"	162	#5	6"	6'-10"	1,155	4'-1"	2'-9"	108	9"	5'-0"	361	5	39'-9"	133	33	39'-9"	876	6'-11"	18	16	45	0.614	132.0	0.5	63	25.1	5,343
6'-0"	5'-0"	10"	8"	30'	108	#6	9"	7'-1"	1,149	162	#5	6"	9'-10"	1,661	5'-8"	4'-2"	162	#5	6"	7'-0"	1,183	4'-2"	2'-10"	82	12"	5'-0"	274	5	39'-9"	133	33	39'-9"	876	7'-1"	19	18	50	0.700	131.9	0.5	69	28.5	5,345
6'-0"	6'-0"	8"	7"	20'	108	#6	9"	6'-11"	1,122	108	#5	9"	10'-7"	1,192	6'-6"	4'-1"	108	#5	9"	6'-9"	760	4'-1"	2'-8"	108	9"	6'-0"	433	5	39'-9"	133	37	39'-9"	982	6'-11"	18	16	45	0.613	115.6	0.5	63	25.0	4,685
6'-0"	6'-0"	9"	7"	26'	108	#6	9"	6'-11"	1,122	162	#5	6"	10'-8"	1,802	6'-7"	4'-1"	162	#5	6"	6'-10"	1,155	4'-1"	2'-9"	108	9"	6'-0"	433	5	39'-9"	133	37	39'-9"	982	6'-11"	18	16	45	0.657	140.7	0.5	63	26.8	5,690
6'-0"	6'-0"	10"	8"	30'	108	#6	9"	7'-1"	1,149	162	#5	6"	10'-10"	1,830	6'-8"	4'-2"	162	#5	6"	7'-0"	1,183	4'-2"	2'-10"	82	12"	6'-0"	329	5	39'-9"	133	37	39'-9"	982	7'-1"	19	18	50	0.749	140.2	0.5	69	30.5	5,675

⑤ For direct traffic culverts (fill height ≤ 2 ft.), identify the required box size and select the option with the minimum fill height.

DISCLAIMER: The use of this standard is governed by the "Texas Engineering Practice Act". No warranty of any kind is made by TxDOT for any purpose whatsoever. TxDOT assumes no responsibility for the conversion of this standard to other formats or for incorrect results or damages resulting from its use.

HL93 LOADING — SHEET 2 OF 2

Texas Department of Transportation — Bridge Division Standard

SINGLE BOX CULVERTS
CAST-IN-PLACE
0' TO 30' FILL

SCC-5 & 6

FILE: scc56ste-21.dgn | DN: TBE | CK: BMP | DW: TxDOT | CK: TxDOT
©TxDOT February 2020 | CONT | SECT | JOB | HIGHWAY
REVISIONS: 04/2021 Updated X values. | DIST | COUNTY | SHEET NO.

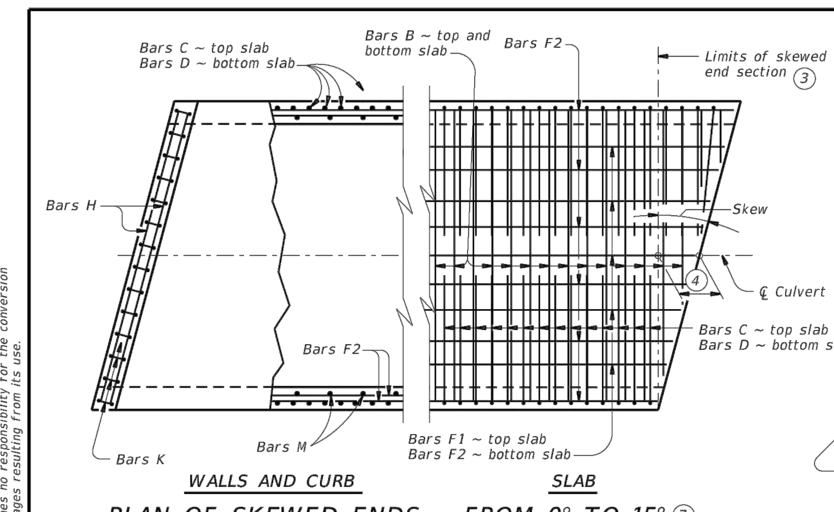

PLAN OF SKEWED ENDS ~ FROM 0° TO 15° ⑦

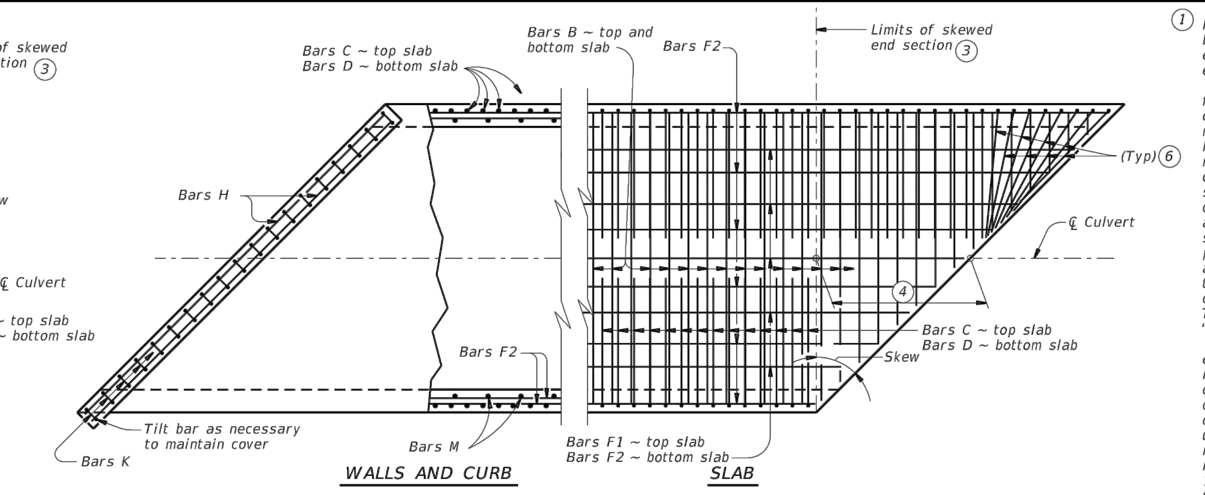

PLAN OF SKEWED ENDS ~ OVER 30° TO 45°

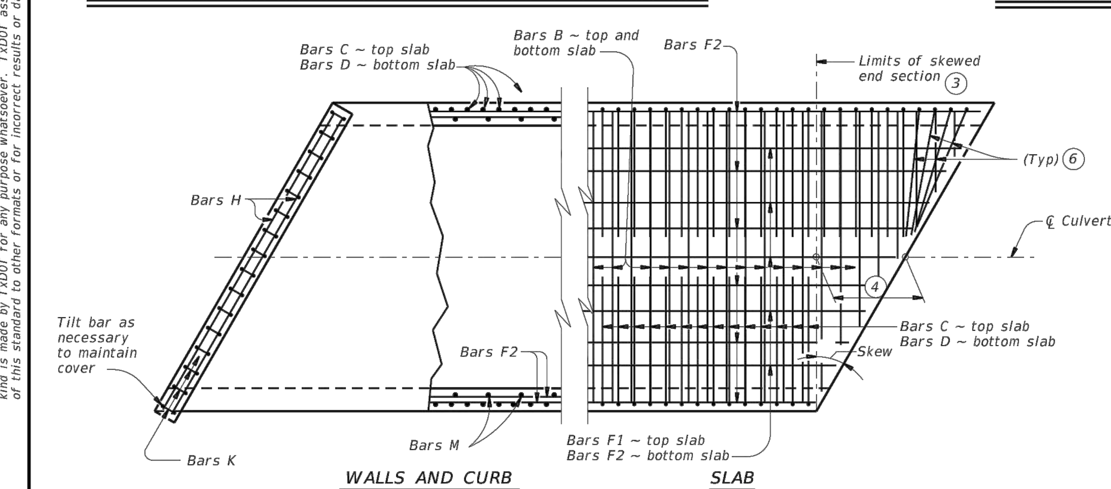

PLAN OF SKEWED ENDS ~ OVER 15° TO 30°

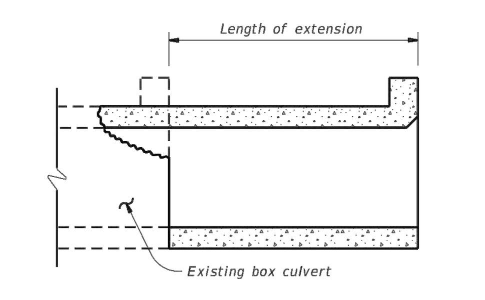

LENGTHENING DETAIL ①

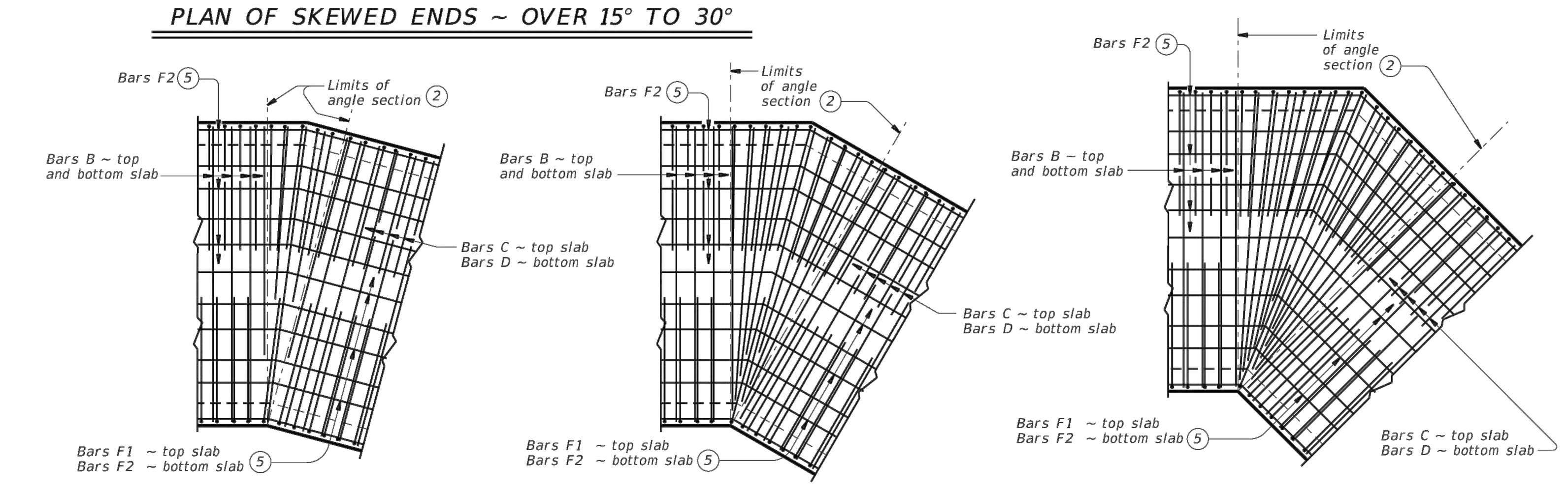

PLAN OF ANGLE SECTION ~ FROM 0° TO 15°

PLAN OF ANGLE SECTION ~ OVER 15° TO 30°

PLAN OF ANGLE SECTION ~ OVER 30° TO 45°

① For skewed box culverts with less than 2'-0" of fill, break back the top slab to provide a 1'-10" minimum lap of the existing longitudinal bars with the longitudinal bars in the extension.
For non-skewed box culverts with less than 2'-0" of fill and for skewed or non-skewed culverts with a fill depth of 2'-0" or greater, break back the top slab to provide a 1'-10" minimum lap of the existing longitudinal bars with the longitudinal bars in the extension. Alternatively, if the box is non-skewed, embed #6 anchor bars with a Type III, C, D , E, or F anchor adhesive into the existing walls, top and bottom slab at 1'-6" center-to-center spacing. Minimum embedment depth is 8". Anchor adhesive chosen must be able to achieve a basic bond strength in tension, Nba, of 26.4 kips. Submit signed and sealed calculations or the manufacturer's published literature showing the proposed anchor adhesive's ability to develop this load to the Engineer for approval prior to use. Anchor installation, including hole size, drilling, and clean out, must be in accordance with Item 450, "Railing." Test adhesive anchors in accordance with Item 450.3.3, "Tests." Test 3 anchors per 100 anchors installed.
Break back wings and apron as necessary to install the extension. Clean and extend the exposed wingwall and apron reinforcing into the extension. When lengthening existing box culverts with dimensions different than current standard dimensions, form horizontal and vertical transitions as directed by the Engineer. Match bottom slabs to maintain an uninterrupted flow line. Field bend existing and new reinforcing into transitions and maintain specified cover requirements. For top slabs of culverts with overlay, with 1-to-2 course surface treatment, or with the top slab as the final riding surface, adjust the "H" dimension to provide a smooth riding surface.

② When the spacing between Bars B becomes less than half of the normal spacing, cut bars to avoid conflict.

③ The length of Bars B vary in the skewed end sections.

④ [One half of overall width] x [tangent of the skew angle]

⑤ Place Bars F1 and F2 continuously through the angle section. Bend Bars F1 and F2 to remain parallel to the walls of the box culvert.

⑥ When necessary to avoid conflict in acute corners, shorten the slab extension leg of Bars C and Bars D to a minimum of 1'-6" for skews of 30° thru 45°.

⑦ At the Contractor's option, for skews of 15° or less, place Bars B, C, and D parallel to the skewed end while maintaining spacing along centerline of box. Increase lengths of Bars B shown on the Single Box Culverts Cast-In-Place (SCC) standards sheets to accommodate the skew.

CONSTRUCTION NOTES:
Do not use permanent forms.
When required, lap Bars H 1'-8" for uncoated or galvanized bars.
Provide a minimum of 1 ½" clear cover.

MATERIAL NOTES:
Provide Grade 60 reinforcing steel.
Provide galvanized reinforcing steel, if required elsewhere in the plans.
Provide Class C concrete (f'c = 3,600 psi) with these exceptions:
provide Class S concrete (f'c = 4,000 psi) for top slabs of culverts with overlay, with 1-to-2 course surface treatment, or with the top slab as the final riding surface.

GENERAL NOTES:
Designed according to AASHTO LRFD Bridge Design Specifications.
Refer to Single Box Culverts Cast-in-Place (SCC) standard sheets for details of straight sections of culvert.
For skewed sections and angle sections, refer to Single Box Culverts Cast-in-Place (SCC) standard sheets for slab and wall dimensions, bar sizes, maximum bar spacing, and any other details not shown.
For skewed ends with curbs, adjust length of Bars H, number of Bars K, curb concrete volume, and reinforcing steel weight by dividing the values shown on the culvert Single Box Culverts Cast-In-Place (SCC) standard sheets by the cosine of the skew angle.

Cover dimensions are clear dimensions, unless noted otherwise.

DISCLAIMER: The use of this standard is governed by the "Texas Engineering Practice Act". No warranty of any kind is made by TxDOT for any purpose whatsoever. TxDOT assumes no responsibility for the conversion of this standard to other formats or for incorrect results or damages resulting from its use.

HL93 LOADING

Texas Department of Transportation — Bridge Division Standard

SINGLE BOX CULVERTS
CAST-IN-PLACE
MISCELLANEOUS DETAILS

SCC-MD

FILE: sccmdste-20.dgn | DN: TxDOT | CK: TxDOT | DW: TxDOT | CK: TxDOT
©TxDOT February 2020 | CONT | SECT | JOB | HIGHWAY
REVISIONS | DIST | COUNTY | SHEET NO.

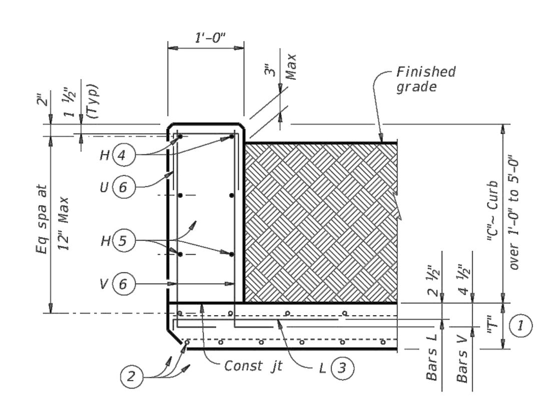

TYPICAL SECTION

Used for curbs over 1'-0" to 5'-0"

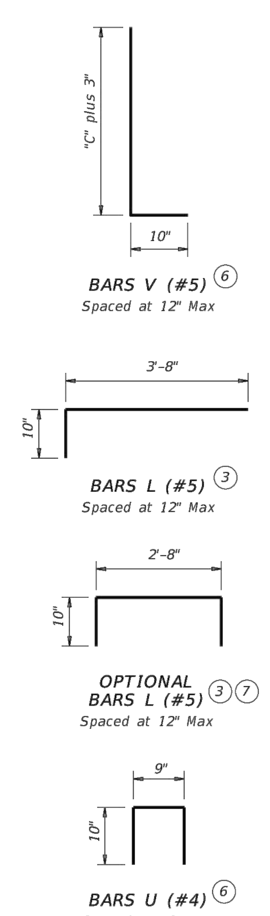

① "T" is equal to the culvert top slab thickness. For precast boxes with slabs less than 7" thick, see SCP-MD standard for additional details.

② Adjust normal culvert slab bars as necessary to clear obstructions.

③ Place bars L as shown. Tilt hook as necessary to maintain cover.

④ Place normal culvert curb bars H(#4) as shown. Adjust as necessary to clear obstructions.

⑤ Additional bars H(#4) as required to maintain 12" Max spacing.

⑥ Replace normal culvert curb bars K with one bar U and two bars V as shown spaced at 12" Max. Adjust length of bars V as necessary to maintain clear cover.

⑦ Optional bars L are to be used only for precast box culverts with 3'-0" closure pour.

⑧ Quantities shown are for Contractor's information only. Quantities are per linear foot of curb length. The value in table can be interpolated for intermediate values of curb height, "C". Quantity includes bars K (when applicable).

TABLE OF ESTIMATED CURB QUANTITIES ⑧

Curb Height "C"	Conc (CY/LF)	Reinf Steel (Lb/LF)
1'-0"	0.037	8.9
1'-6"	0.056	14.3
2'-0"	0.074	15.4
2'-6"	0.093	17.7
3'-0"	0.111	18.8
3'-6"	0.130	21.2
4'-0"	0.148	22.2
4'-6"	0.167	24.6
5'-0"	0.185	25.6

CONSTRUCTION NOTES:
Adjust reinforcing steel as necessary to provide 1 ¼" cover.
For vehicle safety, top of the curb must not project more than 3" above the finished grade.

MATERIAL NOTES:
Provide Grade 60 reinforcing steel.
Provide Class "C" concrete (f'c = 3,600 psi) minimum for curbs.

GENERAL NOTES:
Designed according to AASHTO LRFD Bridge Design Specifications.
These extended curb details have sufficient strength to allow for future retrofit of Type T631 or T631LS railing. These details are suitable for use with PR1, PR2 and PR3 type rails. These details are not suitable for the mounting of other rail types. For new construction using T631 or T631LS railing, use the T631-CM standard.
This Curb is considered as part of the Box Culvert for payment.

Cover dimensions are clear dimensions, unless noted otherwise.
Reinforcing bar dimensions shown are out-to-out of bar.

DISCLAIMER: The use of this standard is governed by the "Texas Engineering Practice Act". No warranty of any kind is made by TxDOT for any purpose whatsoever. TxDOT assumes no responsibility for the conversion of this standard to other formats or for incorrect results or damages resulting from its use.

Texas Department of Transportation — Bridge Division Standard

EXTENDED CURB DETAILS
FOR BOX CULVERTS WITH
CURBS OVER 1'-0" TO 5'-0" TALL

ECD

FILE: ecdstde1.dgn | DN: GAF | CK: TxDOT | DW: TxDOT | CK: GAF
©TxDOT February 2010 | CONT | SECT | JOB | HIGHWAY
REVISIONS: 03-16: General Notes added T631-CM. | DIST | COUNTY | SHEET NO.

NO. | REVISION | DATE

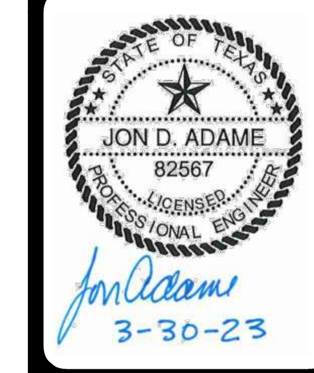

PAPE-DAWSON ENGINEERS
SAN ANTONIO I AUSTIN I HOUSTON I FORT WORTH I DALLAS
2000 NW LOOP 410 I SAN ANTONIO, TX 78213 I 210.375.9000
TEXAS ENGINEERING FIRM #470 I TEXAS SURVEYING FIRM #10028800

SMILEY TRACT UNIT 1
SAN ANTONIO, TEXAS

DRAINAGE DETAILS

PLAT NO. 22-11800482
JOB NO. 11100-97
DATE MARCH 2023
DESIGNER AA
CHECKED VS DRAWN AA
SHEET C1.16

Date: Mar 30, 2023, 5:04pm User ID: aatry
File: P:\111\00\97\Design\Civil\SDDT-1110097.dwg

THIS DOCUMENT HAS BEEN PRODUCED FROM MATERIAL THAT WAS STORED AND/OR TRANSMITTED ELECTRONICALLY AND MAY HAVE BEEN INADVERTENTLY ALTERED. RELY ONLY ON FINAL HARDCOPY MATERIALS BEARING THE CONSULTANT'S ORIGINAL SIGNATURE AND SEAL. AERIAL IMAGERY PROVIDED BY GOOGLE© UNLESS OTHERWISE NOTED. Imagery © 2016,CAPCOG,Digital Globe,Texas Orthoimagery Program, USDA Farm Service Agency.

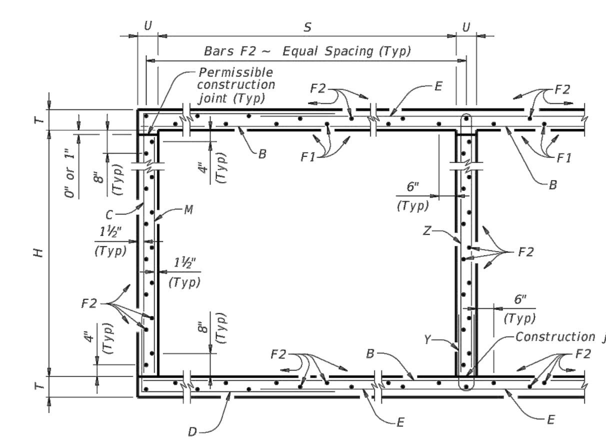

TYPICAL SECTION

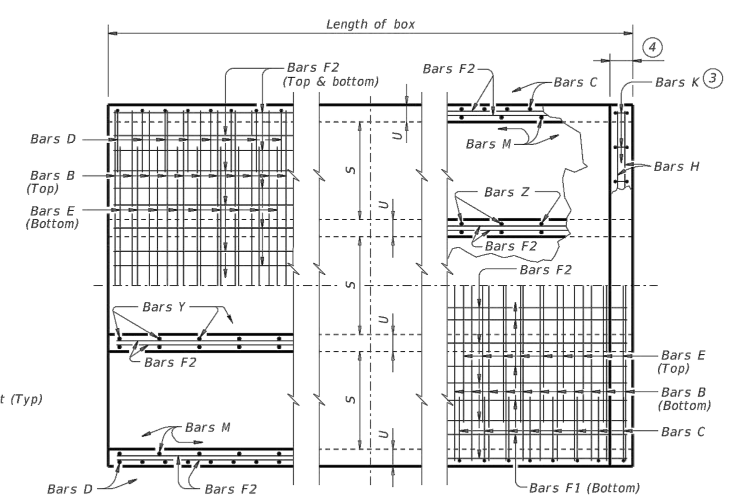

PART PLANS

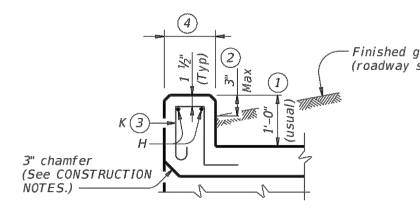

SECTION THRU CURB

TABLE OF BAR DIMENSIONS		
H	"X"	"Y"
2'-0"	2'-6 ½"	3'-8 ½"
3'-0"	3'-6 ½"	3'-8 ½"
4'-0"	4'-6 ½"	3'-8 ½"
5'-0"	5'-6 ½"	3'-8 ½"

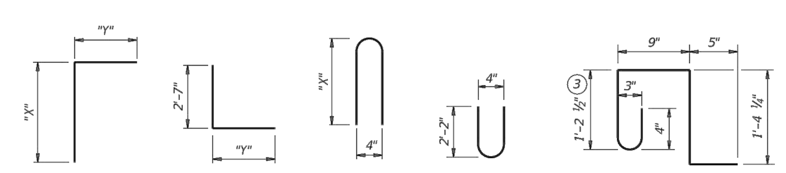

BARS C BARS D BARS Z BARS Y BARS K (#4)
(Spa = 1'-0" Max)
(Length = 4'-2")

(1) 0" Min to 5'-0" Max. Estimated curb heights are shown elsewhere in the plans. For structures with pedestrian rail or curbs taller than 1'-0", refer to the Extended Curb Details (ECD) standard sheet. For structures with T631 or T631LS bridge rail, refer to the Mounting Details for T631 & T631LS Rails (T631-CM) standard sheet. Refer to the Rail Anchorage Curb (RAC) standard sheet for structures with bridge rail other than T631 or T631LS.

(2) For vehicle safety, the following requirements must be met:
- For structures without bridge rail, construct curbs no more than 3" above finished grade.
- For structures with bridge rail, construct curbs flush with finished grade.

Reduce curb heights, if necessary, to meet the above requirements. No changes will be made in quantities and no additional compensation will be allowed for this work.

(3) For curbs less than 1'-0" high, tilt Bars K or reduce bar height as necessary to maintain cover. For curbs less than 3" high, Bars K may be omitted.

(4) 1'-0" typical. 2'-3" when the Rail Anchorage Curb (RAC) standard sheet is referred to elsewhere in the plans.

The Contractor may replace Bars B, C, D, E, F1, F2, M, Y, and/or Z with deformed welded wire reinforcement (WWR) meeting the requirements of ASTM A1064. The area of required reinforcement may be reduced by the ratio of 60 ksi / 70 ksi. Spacing of WWR is limited to 4" Min and 18" Max. When required, provide lap splices in the WWR of the same length required for the equivalent bar size, rounded up for wire sizes between conventional bar sizes. The lap length required for WWR is never less than the lap length required for uncoated #4 bars.

Example conversion: Replacing No. 6 Gr 60 at 6" Spacing with WWR
Required WWR = (0.44 sq. in. per 0.5 ft.) x (60 ksi / 70 ksi) = 0.755 sq. in. per ft.
If D30.6 wire is used to meet the 0.755 sq. in. per ft. requirement in this example, the required spacing = (0.306 sq. in.) / (0.755 sq. in. per ft.) x (12 in. per ft.) = 4.86" Max spacing. Required lap length for the provided D30.6 wire is 2'-1" (the same minimum lap length required for uncoated #5 bars, as listed under MATERIAL NOTES).

CONSTRUCTION NOTES:
Do not use permanent forms.
Chamfer the bottom edge of the top slab 3" at the entrance.
Optionally, raise construction joints shown at the flow line by a maximum of 6". If this option is taken, Bars M may be cut off or raised, Bars C and D may be reversed, and Bars Y and Z may be reversed.

MATERIAL NOTES:
Provide Grade 60 reinforcing steel.
Provide galvanized reinforcing steel if required elsewhere in the plans.
Provide Class C concrete (f'c = 3,600 psi) for culvert barrel and curb, with the following exceptions: provide Class S concrete (f'c = 4,000 psi) for top slabs of:
- culverts with overlay,
- culverts with 1-to-2 course surface treatment, or
- culverts with the top slab as the final riding surface.

Provide bar laps, where required, as follows:
- Uncoated or galvanized ~ #4 = 1'-8" Min
- Uncoated or galvanized ~ #5 = 2'-1" Min
- Uncoated or galvanized ~ #6 = 2'-6" Min

GENERAL NOTES:
Designed according to AASHTO LRFD Bridge Design Specifications for the range of fill heights shown.
See the Multiple Box Culverts Cast-In-Place Miscellaneous Detail (MC-MD) standard sheet for details pertaining to skewed ends, angle sections, and lengthening.

Cover dimensions are clear dimensions, unless noted otherwise.
Reinforcing bar dimensions shown are out-to-out of bar.

DISCLAIMER:
The use of this standard is governed by the "Texas Engineering Practice Act". No warranty of any kind is made by TxDOT for any purpose whatsoever. TxDOT assumes no responsibility for the conversion of this standard to other formats or for incorrect results or damages resulting from its use.

DATE:
FILE:

HL93 LOADING SHEET 1 OF 2

Texas Department of Transportation — Bridge Division Standard

MULTIPLE BOX CULVERTS CAST-IN-PLACE
5'-0" SPAN
0' TO 20' FILL

MC-5-20

FILE: mc520ste-20.dgn | DN: TBE | CK: BMP | DW: TxDOT | CK: TxDOT
©TxDOT February 2020 | CONT | SECT | JOB | HIGHWAY
REVISIONS | DIST | COUNTY | SHEET NO.

BILLS OF REINFORCING STEEL (For Box Length = 40 feet)

NUMBER OF SPANS	S	H	T	U	Bars B No.	Size	Spa	Length	Wt	Bars C & D No.	Size	Spa	Bars C Length	Wt	Bars D Length	Wt	Bars E No.	Size	Spa	Length	Wt	Bars F1 ~ #4 No.	Spa	Length	Wt	Bars F2 ~ #4 No.	Spa	Length	Wt	Bars M ~ #4 No.	Spa	Length	Wt	Bars Y & Z ~ #4 No.	Spa	Bars Y Length	Wt	Bars Z Length	Wt	Bars H 4 ~ #4 Length	Wt	Bars K No.	Wt	Per Foot of Barrel Conc (CY)	Renf (Lb)	Curb Conc (CY)	Renf (Lb)	Total Conc (CY)	Renf (Lb)
2	5' - 0"	2' - 0"	8"	7"	108	#5	9"	11' - 6"	1,295	108	#5	9"	6' - 3"	704	6' - 4"	713	108	#5	9"	8' - 8"	976	8	18"	39' - 9"	212	38	18"	39' - 9"	1,009	108	9"	2' - 0"	144	54	9"	4' - 7"	165	5' - 3"	189	11' - 6"	31	26	72	0.710	135.2	0.9	103	29.3	5,510
3	5' - 0"	2' - 0"	8"	7"	108	#5	9"	17' - 1"	1,924	108	#5	9"	6' - 3"	704	6' - 4"	713	108	#5	9"	14' - 3"	1,605	12	18"	39' - 9"	319	54	18"	39' - 9"	1,434	108	9"	2' - 0"	144	108	9"	4' - 7"	331	5' - 3"	379	17' - 1"	46	38	106	1.029	188.8	1.3	152	42.4	7,705
4	5' - 0"	2' - 0"	8"	7"	108	#5	9"	22' - 8"	2,553	108	#5	9"	6' - 3"	704	6' - 4"	713	108	#5	9"	19' - 10"	2,234	16	18"	39' - 9"	425	70	18"	39' - 9"	1,859	108	9"	2' - 0"	144	162	9"	4' - 7"	496	5' - 3"	568	22' - 8"	61	48	134	1.348	242.4	1.7	195	55.6	9,891
5	5' - 0"	2' - 0"	8"	7"	108	#5	9"	28' - 3"	3,182	108	#5	9"	6' - 3"	704	6' - 4"	713	108	#5	9"	25' - 5"	2,863	20	18"	39' - 9"	531	86	18"	39' - 9"	2,284	108	9"	2' - 0"	144	216	9"	4' - 7"	661	5' - 3"	758	28' - 3"	75	60	167	1.667	296.0	2.1	242	68.8	12,082
6	5' - 0"	2' - 0"	8"	7"	108	#5	9"	33' - 10"	3,811	108	#5	9"	6' - 3"	704	6' - 4"	713	108	#5	9"	31' - 0"	3,492	24	18"	39' - 9"	637	102	18"	39' - 9"	2,708	108	9"	2' - 0"	144	270	9"	4' - 7"	827	5' - 3"	947	33' - 10"	90	70	195	1.986	349.6	2.5	285	82.0	14,268
2	5' - 0"	3' - 0"	8"	7"	108	#6	9"	11' - 6"	1,865	108	#5	9"	7' - 3"	817	6' - 4"	713	108	#5	9"	8' - 8"	976	8	18"	39' - 9"	212	44	18"	39' - 9"	1,168	108	9"	3' - 0"	216	54	9"	4' - 7"	165	7' - 3"	262	11' - 6"	31	26	72	0.775	159.9	0.9	103	31.9	6,497
3	5' - 0"	3' - 0"	8"	7"	108	#6	9"	17' - 1"	2,771	108	#5	9"	7' - 3"	817	6' - 4"	713	108	#5	9"	14' - 3"	1,605	12	18"	39' - 9"	319	62	18"	39' - 9"	1,646	108	9"	3' - 0"	216	108	9"	4' - 7"	331	7' - 3"	523	17' - 1"	46	38	106	1.115	223.5	1.3	152	45.9	9,093
4	5' - 0"	3' - 0"	8"	7"	108	#6	9"	22' - 8"	3,677	108	#5	9"	7' - 3"	817	6' - 4"	713	108	#5	9"	19' - 10"	2,234	16	18"	39' - 9"	425	80	18"	39' - 9"	2,124	108	9"	3' - 0"	216	162	9"	4' - 7"	496	7' - 3"	785	22' - 8"	61	48	134	1.456	287.2	1.7	195	59.9	11,682
5	5' - 0"	3' - 0"	8"	7"	108	#6	9"	28' - 3"	4,583	108	#5	9"	7' - 3"	817	6' - 4"	713	108	#5	9"	25' - 5"	2,863	20	18"	39' - 9"	531	98	18"	39' - 9"	2,602	108	9"	3' - 0"	216	216	9"	4' - 7"	661	7' - 3"	1,046	28' - 3"	75	60	167	1.796	350.8	2.1	242	73.9	14,274
6	5' - 0"	3' - 0"	8"	7"	108	#6	9"	33' - 10"	5,488	108	#5	9"	7' - 3"	817	6' - 4"	713	108	#5	9"	31' - 0"	3,492	24	18"	39' - 9"	637	116	18"	39' - 9"	3,080	108	9"	3' - 0"	216	270	9"	4' - 7"	827	7' - 3"	1,308	33' - 10"	90	70	195	2.137	414.5	2.5	285	88.0	16,863
2	5' - 0"	4' - 0"	8"	7"	108	#6	9"	11' - 6"	1,865	108	#5	9"	8' - 3"	929	6' - 4"	713	108	#5	9"	8' - 8"	976	8	18"	39' - 9"	212	44	18"	39' - 9"	1,168	108	9"	4' - 0"	289	54	9"	4' - 7"	165	9' - 3"	334	11' - 6"	31	26	72	0.840	166.3	0.9	103	34.5	6,754
3	5' - 0"	4' - 0"	8"	7"	108	#6	9"	17' - 1"	2,771	108	#5	9"	8' - 3"	929	6' - 4"	713	108	#5	9"	14' - 3"	1,605	12	18"	39' - 9"	319	62	18"	39' - 9"	1,646	108	9"	4' - 0"	289	108	9"	4' - 7"	331	9' - 3"	667	17' - 1"	46	38	106	1.202	231.8	1.3	152	49.4	9,422
4	5' - 0"	4' - 0"	8"	7"	108	#6	9"	22' - 8"	3,677	108	#5	9"	8' - 3"	929	6' - 4"	713	108	#5	9"	19' - 10"	2,234	16	18"	39' - 9"	425	80	18"	39' - 9"	2,124	108	9"	4' - 0"	289	162	9"	4' - 7"	496	9' - 3"	1,001	22' - 8"	61	48	134	1.564	297.2	1.7	195	64.3	12,083
5	5' - 0"	4' - 0"	8"	7"	108	#6	9"	28' - 3"	4,583	108	#5	9"	8' - 3"	929	6' - 4"	713	108	#5	9"	25' - 5"	2,863	20	18"	39' - 9"	531	98	18"	39' - 9"	2,602	108	9"	4' - 0"	289	216	9"	4' - 7"	661	9' - 3"	1,335	28' - 3"	75	60	167	1.926	362.7	2.1	242	79.1	14,748
6	5' - 0"	4' - 0"	8"	7"	108	#6	9"	33' - 10"	5,488	108	#5	9"	8' - 3"	929	6' - 4"	713	108	#5	9"	31' - 0"	3,492	24	18"	39' - 9"	637	116	18"	39' - 9"	3,080	108	9"	4' - 0"	289	270	9"	4' - 7"	827	9' - 3"	1,668	33' - 10"	90	70	195	2.288	428.1	2.5	285	94.0	17,408
2	5' - 0"	5' - 0"	8"	7"	108	#6	9"	11' - 6"	1,865	108	#5	9"	9' - 3"	1,042	6' - 4"	713	108	#5	9"	8' - 8"	976	8	18"	39' - 9"	212	50	18"	39' - 9"	1,328	108	9"	5' - 0"	361	54	9"	4' - 7"	165	11' - 3"	406	11' - 6"	31	26	72	0.904	176.7	0.9	103	37.0	7,171
3	5' - 0"	5' - 0"	8"	7"	108	#6	9"	17' - 1"	2,771	108	#5	9"	9' - 3"	1,042	6' - 4"	713	108	#5	9"	14' - 3"	1,605	12	18"	39' - 9"	319	70	18"	39' - 9"	1,859	108	9"	5' - 0"	361	108	9"	4' - 7"	331	11' - 3"	812	17' - 1"	46	38	106	1.288	245.3	1.3	152	52.8	9,965
4	5' - 0"	5' - 0"	8"	7"	108	#6	9"	22' - 8"	3,677	108	#5	9"	9' - 3"	1,042	6' - 4"	713	108	#5	9"	19' - 10"	2,234	16	18"	39' - 9"	425	90	18"	39' - 9"	2,390	108	9"	5' - 0"	361	162	9"	4' - 7"	496	11' - 3"	1,217	22' - 8"	61	48	134	1.672	313.9	1.7	195	68.6	12,750
5	5' - 0"	5' - 0"	8"	7"	108	#6	9"	28' - 3"	4,583	108	#5	9"	9' - 3"	1,042	6' - 4"	713	108	#5	9"	25' - 5"	2,863	20	18"	39' - 9"	531	110	18"	39' - 9"	2,921	108	9"	5' - 0"	361	216	9"	4' - 7"	661	11' - 3"	1,623	28' - 3"	75	60	167	2.056	382.5	2.1	242	84.3	15,540
6	5' - 0"	5' - 0"	8"	7"	108	#6	9"	33' - 10"	5,488	108	#5	9"	9' - 3"	1,042	6' - 4"	713	108	#5	9"	31' - 0"	3,492	24	18"	39' - 9"	637	130	18"	39' - 9"	3,452	108	9"	5' - 0"	361	270	9"	4' - 7"	827	11' - 3"	2,029	33' - 10"	90	70	195	2.439	451.0	2.5	285	100.1	18,326

DISCLAIMER:
The use of this standard is governed by the "Texas Engineering Practice Act". No warranty of any kind is made by TxDOT for any purpose whatsoever. TxDOT assumes no responsibility for the conversion of this standard to other formats or for incorrect results or damages resulting from its use.

DATE:
FILE:

HL93 LOADING SHEET 2 OF 2

Texas Department of Transportation — Bridge Division Standard

MULTIPLE BOX CULVERTS CAST-IN-PLACE
5'-0" SPAN
0' TO 20' FILL

MC-5-20

FILE: mc520ste-20.dgn | DN: TBE | CK: BMP | DW: TxDOT | CK: TxDOT
©TxDOT February 2020 | CONT | SECT | JOB | HIGHWAY
REVISIONS | DIST | COUNTY | SHEET NO.

BILLS OF REINFORCING STEEL (For Box Length = 40 feet)

S	H	T	U	FILL HEIGHT (5)	Bars B No.	Size	Spa	Length	Weight	Bars C No.	Size	Spa	Length	Weight	" X "	" Y "	Bars D No.	Size	Spa	Length	Weight	" Y "	" Z "	Bars M ~ #4 No.	Spa	Length	Weight	Bars F1 ~ #4 at 18" Spa No.	Length	Wt	Bars F2 ~ #4 at 18" Spa No.	Length	Weight	Bars H 4 ~ #4 Length	Wt	Bars K No.	Wt	Per Foot of Barrel Conc (CY)	Reinf (Lb)	Curb Conc (CY)	Reinf (Lb)	Total Conc (CY)	Reinf (Lb)
3' - 0"	2' - 0"	8"	7"	30'	108	#5	9"	3' - 11"	441	108	#4	9"	5' - 4"	385	2' - 6"	2' - 10"	108	#4	9"	5' - 1"	367	2' - 10"	2' - 3"	108	9"	2' - 0"	144	3	39' - 9"	80	19	39' - 9"	505	3' - 11"	10	10	28	0.292	48.1	0.3	38	12.0	1,960
3' - 0"	3' - 0"	8"	7"	30'	108	#5	9"	3' - 11"	441	108	#4	9"	6' - 4"	457	3' - 6"	2' - 10"	108	#4	9"	5' - 1"	367	2' - 10"	2' - 3"	108	9"	3' - 0"	216	3	39' - 9"	80	23	39' - 9"	611	3' - 11"	10	10	28	0.335	54.3	0.3	38	13.7	2,210
4' - 0"	2' - 0"	8"	7"	30'	108	#5	9"	4' - 11"	554	162	#4	6"	5' - 8"	613	2' - 6"	3' - 2"	162	#4	6"	5' - 5"	586	3' - 2"	2' - 3"	108	9"	2' - 0"	144	3	39' - 9"	80	21	39' - 9"	558	4' - 11"	13	12	33	0.342	63.4	0.4	46	14.1	2,581
4' - 0"	3' - 0"	8"	7"	30'	108	#5	9"	4' - 11"	554	162	#4	6"	6' - 8"	721	3' - 6"	3' - 2"	162	#4	6"	5' - 5"	586	3' - 2"	2' - 3"	108	9"	3' - 0"	216	3	39' - 9"	80	25	39' - 9"	664	4' - 11"	13	12	33	0.385	70.5	0.4	46	15.8	2,867
4' - 0"	4' - 0"	8"	7"	30'	108	#5	9"	4' - 11"	554	162	#4	6"	7' - 8"	830	4' - 6"	3' - 2"	162	#4	6"	5' - 5"	586	3' - 2"	2' - 3"	108	9"	4' - 0"	289	3	39' - 9"	80	25	39' - 9"	664	4' - 11"	13	12	33	0.428	75.1	0.4	46	17.5	3,049

(5) For direct traffic culverts (fill height ≤ 2 ft.), identify the required box size and select the option with the minimum fill height.

DISCLAIMER:
The use of this standard is governed by the "Texas Engineering Practice Act". No warranty of any kind is made by TxDOT for any purpose whatsoever. TxDOT assumes no responsibility for the conversion of this standard to other formats or for incorrect results or damages resulting from its use.

DATE:
FILE:

HL93 LOADING SHEET 2 OF 2

Texas Department of Transportation — Bridge Division Standard

SINGLE BOX CULVERTS CAST-IN-PLACE
0' TO 30' FILL

SCC-3 & 4

FILE: scc34ste-21.dgn | DN: TBE | CK: BMP | DW: TxDOT | CK: TxDOT
©TxDOT February 2020 | CONT | SECT | JOB | HIGHWAY
REVISIONS
04/2021 Updated X values. | DIST | COUNTY | SHEET NO.

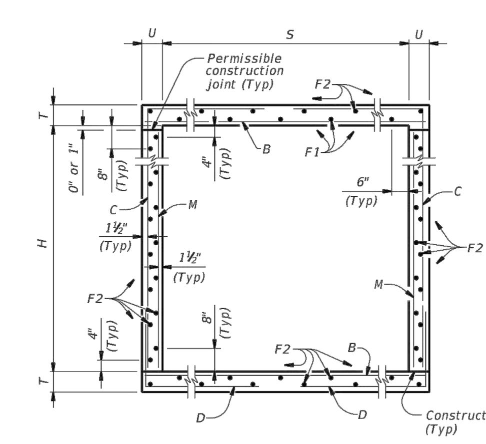

TYPICAL SECTION

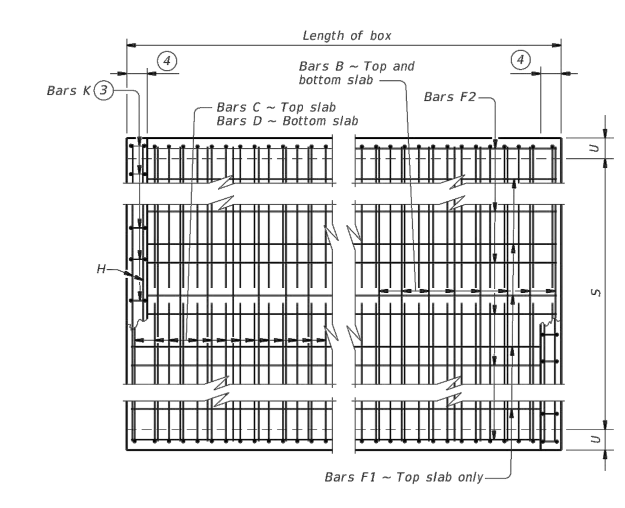

PLAN OF REINF STEEL

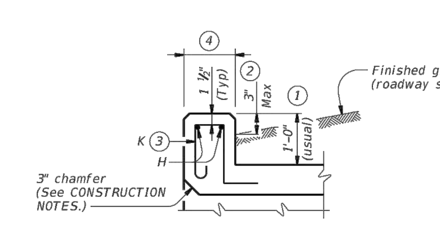

SECTION THRU CURB

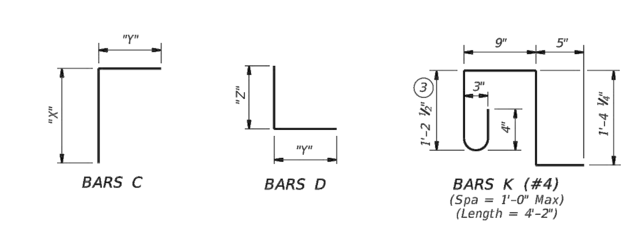

BARS C BARS D BARS K (#4)
(Spa = 1'-0" Max)
(Length = 4'-2")

(1) 0" Min to 5'-0" Max. Estimated curb heights are shown elsewhere in the plans. For structures with pedestrian rail or curbs taller than 1'-0", refer to the Extended Curb Details (ECD) standard sheet. For structures with T631 or T631LS bridge rail, refer to the Mounting Details for T631 & T631LS Rails (T631-CM) standard sheet. Refer to the Rail Anchorage Curb (RAC) standard sheet for structures with bridge rail other than T631 or T631LS.

(2) For vehicle safety, the following requirements must be met:
- For structures without bridge rail, construct curbs no more than 3" above finished grade.
- For structures with bridge rail, construct curbs flush with finished grade.

Reduce curb heights, if necessary, to meet the above requirements. No changes will be made in quantities and no additional compensation will be allowed for this work.

(3) For curbs less than 1'-0" high, tilt Bars K or reduce bar height as necessary to maintain cover. For curbs less than 3" high, Bars K may be omitted.

(4) 1'-0" typical. 2'-3" when the Rail Anchorage Curb (RAC) standard sheet is referred to elsewhere in the plans.

The Contractor may replace Bars B, C, D, E, F1, F2, M, Y, and/or Z with deformed welded wire reinforcement (WWR) meeting the requirements of ASTM A1064. The area of required reinforcement may be reduced by the ratio of 60 ksi / 70 ksi. Spacing of WWR is limited to 4" Min and 18" Max. When required, provide lap splices in the WWR of the same length required for the equivalent bar size, rounded up for wire sizes between conventional bar sizes. The lap length required for WWR is never less than the lap length required for uncoated #4 bars.

Example conversion: Replacing No. 6 Gr 60 at 6" Spacing with WWR.
Required WWR = (0.44 sq. in. per 0.5 ft.) x (60 ksi / 70 ksi) = 0.755 sq. in. per ft.
If D30.6 wire is used to meet the 0.755 sq. in. per ft. requirement in this example, the required spacing = (0.306 sq. in.) / (0.755 sq. in. per ft.) x (12 in. per ft.) = 4.86" Max spacing. Required lap length for the provided D30.6 wire is 2'-1" (the same minimum lap length required for uncoated #5 bars, as listed under MATERIAL NOTES).

CONSTRUCTION NOTES:
Do not use permanent forms.
Chamfer the bottom edge of the top slab 3" at the entrance.
Optionally, raise construction joints shown at the flow line by a maximum of 6". If this option is taken, Bars M may be cut off or raised, Bars C and D may be reversed.

MATERIAL NOTES:
Provide Grade 60 reinforcing steel.
Provide galvanized reinforcing steel if required elsewhere in the plans.
Provide Class C concrete (f'c = 3,600 psi) for culvert barrel and curb, with the following exceptions: provide Class S concrete (f'c = 4,000 psi) for top slabs of:
- culverts with overlay,
- culverts with 1-to-2 course surface treatment, or
- culverts with the top slab as the final riding surface.

Provide bar laps, where required, as follows:
- Uncoated or galvanized ~ #4 = 1'-8" Min
- Uncoated or galvanized ~ #5 = 2'-1" Min

GENERAL NOTES:
Designed according to AASHTO LRFD Bridge Design Specifications for the range of fill heights shown.
See the Single Box Culverts Cast-In-Place Miscellaneous Detail (SCC-MD) standard sheet for details pertaining to skewed ends, angle sections, and lengthening.

Cover dimensions are clear dimensions, unless noted otherwise.
Reinforcing bar dimensions shown are out-to-out of bar.

DISCLAIMER:
The use of this standard is governed by the "Texas Engineering Practice Act". No warranty of any kind is made by TxDOT for any purpose whatsoever. TxDOT assumes no responsibility for the conversion of this standard to other formats or for incorrect results or damages resulting from its use.

DATE:
FILE:

HL93 LOADING SHEET 1 OF 2

Texas Department of Transportation — Bridge Division Standard

SINGLE BOX CULVERTS CAST-IN-PLACE
0' TO 30' FILL

SCC-3 & 4

FILE: scc34ste-21.dgn | DN: TBE | CK: BMP | DW: TxDOT | CK: TxDOT
©TxDOT February 2020 | CONT | SECT | JOB | HIGHWAY
REVISIONS
04/2021 Updated X values. | DIST | COUNTY | SHEET NO.

NO.	REVISION	DATE

STATE OF TEXAS
JON D. ADAME
82567
LICENSED PROFESSIONAL ENGINEER
Jon Adame
3-30-23

PAPE-DAWSON ENGINEERS
SAN ANTONIO I AUSTIN I HOUSTON I FORT WORTH I DALLAS
2000 NW LOOP 410 I SAN ANTONIO, TX 78213 I 210.375.9000
TEXAS ENGINEERING FIRM #470 I TEXAS SURVEYING FIRM #10028800

SMILEY TRACT UNIT 1
SAN ANTONIO, TEXAS
DRAINAGE DETAILS

PLAT NO. 22-11800482
JOB NO. 11100-97
DATE MARCH 2023
DESIGNER AA
CHECKED VS DRAWN AA
SHEET C1.17

Date: Mar 30, 2023, 5:04pm User ID: aatry
File: P:\111\00\97\Design\Civil\SDDT-1110097.dwg

THIS DOCUMENT HAS BEEN PRODUCED FROM MATERIAL THAT WAS STORED AND/OR TRANSMITTED ELECTRONICALLY AND MAY HAVE BEEN INADVERTENTLY ALTERED. RELY ONLY ON FINAL HARDCOPY MATERIALS BEARING THE CONSULTANT'S ORIGINAL SIGNATURE AND SEAL. AERIAL IMAGERY PROVIDED BY GOOGLE© UNLESS OTHERWISE NOTED. Imagery © 2016,CAPCOG,Digital Globe,Texas Orthoimagery Program, USDA Farm Service Agency.

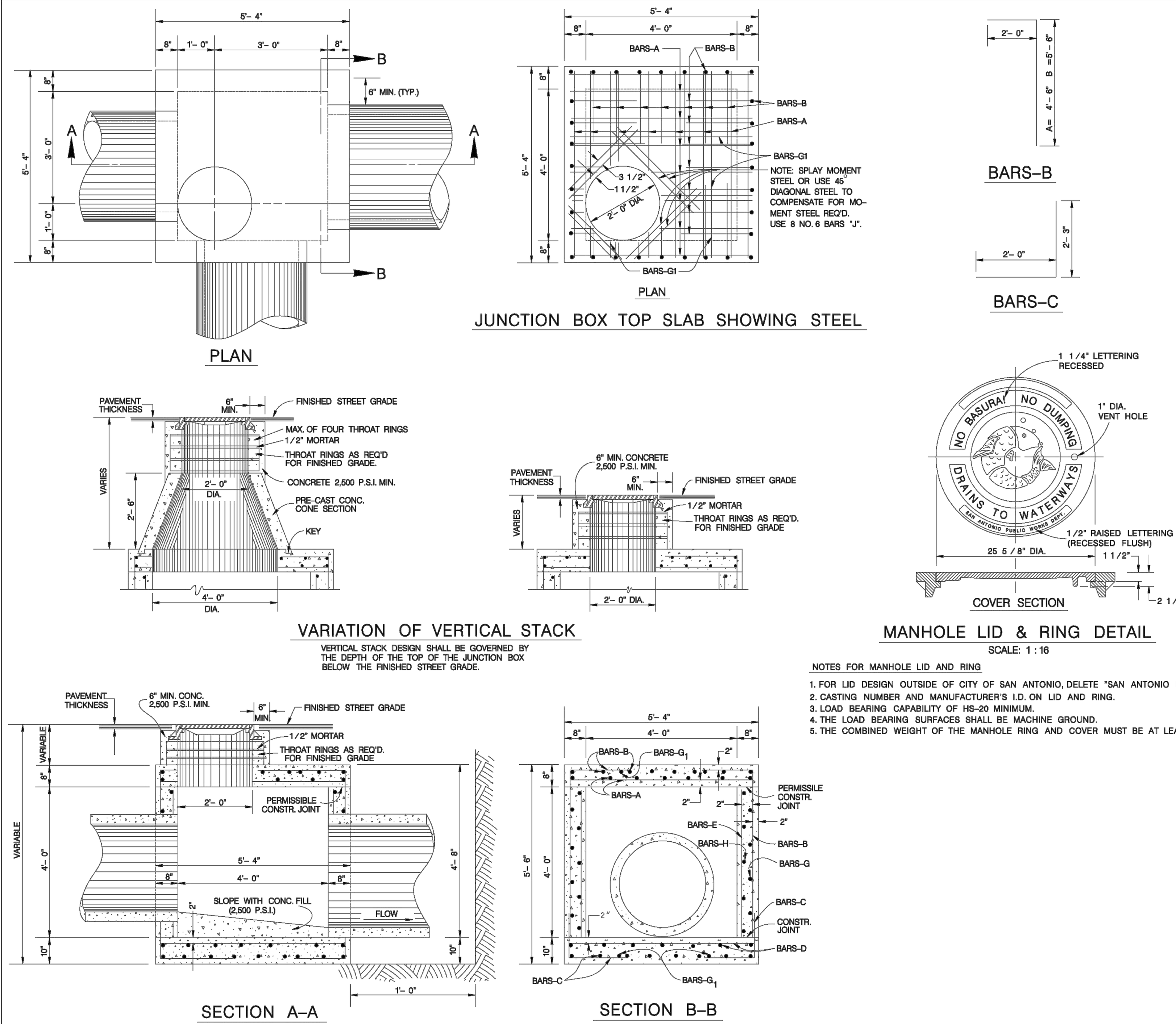

NOTES FOR MANHOLE LID AND RING

1. FOR LID DESIGN OUTSIDE OF CITY OF SAN ANTONIO, DELETE "SAN ANTONIO PUBLIC WORKS DEPT.".
2. CASTING NUMBER AND MANUFACTURER'S I.D. ON LID AND RING.
3. LOAD BEARING CAPABILITY OF HS–20 MINIMUM.
4. THE LOAD BEARING SURFACES SHALL BE MACHINE GROUND.
5. THE COMBINED WEIGHT OF THE MANHOLE RING AND COVER MUST BE AT LEAST 260 LBS.

SCHEDULE FOR REINFORCING STEEL (A = 4' X 4' X 4' J.B. NO. 1 & 4)

SHAPE	BAR	NO.	SIZE	SPACING	LENGTH	WEIGHT
STRAIGHT	A	16	4	9" O.C.	5'– 1"	54
	B	32	5	8" O.C.	6'– 10"	228
	C	32	5	8" O.C.	4'– 3"	142
STRAIGHT	D	16	4	9" O.C.	5'– 1"	54
STRAIGHT	E	16	3	12" O.C.	3'–11"	24
STRAIGHT	G	16	4	12" O.C.	5'–1"	54
STRAIGHT	G_1	8	4	AS SHOWN	5'–1"	27
STRAIGHT	H	20	3	12" O.C.	4'–5"	33
STRAIGHT	J	8	6	3 1/2"	2'– 10"	34
					TOTAL	650 LBS.

CLASS "A" CONCRETE– 3.43 CU. YDS. (DOES NOT EXCLUDE MANHOLE OPENINGS OR PIPE OPENING)

* NOTE: BAR SIZE AND SPACING BASED ON SPANS AS SHOWN – ANY REVISIONS TO THESE SPANS SHALL INCLUDE A RE–DESIGN ON STEEL REQD.

1. CONCRETE FOR STRUCTURE SHALL BE CLASS "A," 3,000 P.S.I. AT 28 DAYS.
2. ALL EXPOSED EDGES SHALL BE CHAMFERED 3 /4".
3. REINFORCING STEEL SHALL BE NEW BILLET STEEL, INTERMEDIATE GRADE, ASTM. A–15. THE DEFORMATION SHALL CONFORM TO ASTM. A–305.
4. ALL DIMENSIONS RELATING TO REINFORCING STEEL ARE TO CENTER OF BARS.
5. ALL BARS INTERCEPTING MANHOLE OPENING AND REINFORCED CONCRETE PIPE SHALL BE FIELD–CUT.
6. WHERE LAPPING OF BARS IS REQUIRED, A MINIMUM LAP OF 33 DIAMETERS SHALL BE USED.
7. INVERT OF JUNCTION BOX TO BE SHAPED WITH CONCRETE FILL (2,500 P.S.I. MIN.) TO EFFECT DRAINAGE TO OUTLET PIPE. COST SUBSIDIARY TO CLASS "A" CONCRETE (JUNCTION BOXES).
8. PAYMENT FOR ALL EXCAVATION, BACKFILLING, CONCRETE, REINFORCING STEEL, VERTICAL STACK, RING AND COVER SHALL BE INCLUDED IN THE UNIT COST OF ITEM 403 – "STORM SEWER JUNCTION BOXES AND INLETS".

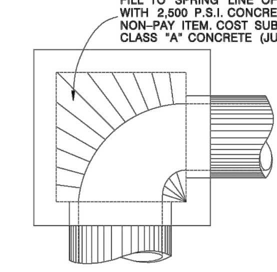

CURVED DEFLECTOR DETAIL

JANUARY 2005

CITY OF SAN ANTONIO
CAPITAL IMPROVEMENTS MANAGEMENT SERVICES DEPARTMENT

4'x4'x4' JUNCTION BOX STANDARDS

____% SUBMITTAL PROJECT NO.:____ DATE:____
DRWN. BY:____ DSGN. BY:____ CHKD. BY:____ SHEET NO.:___OF___

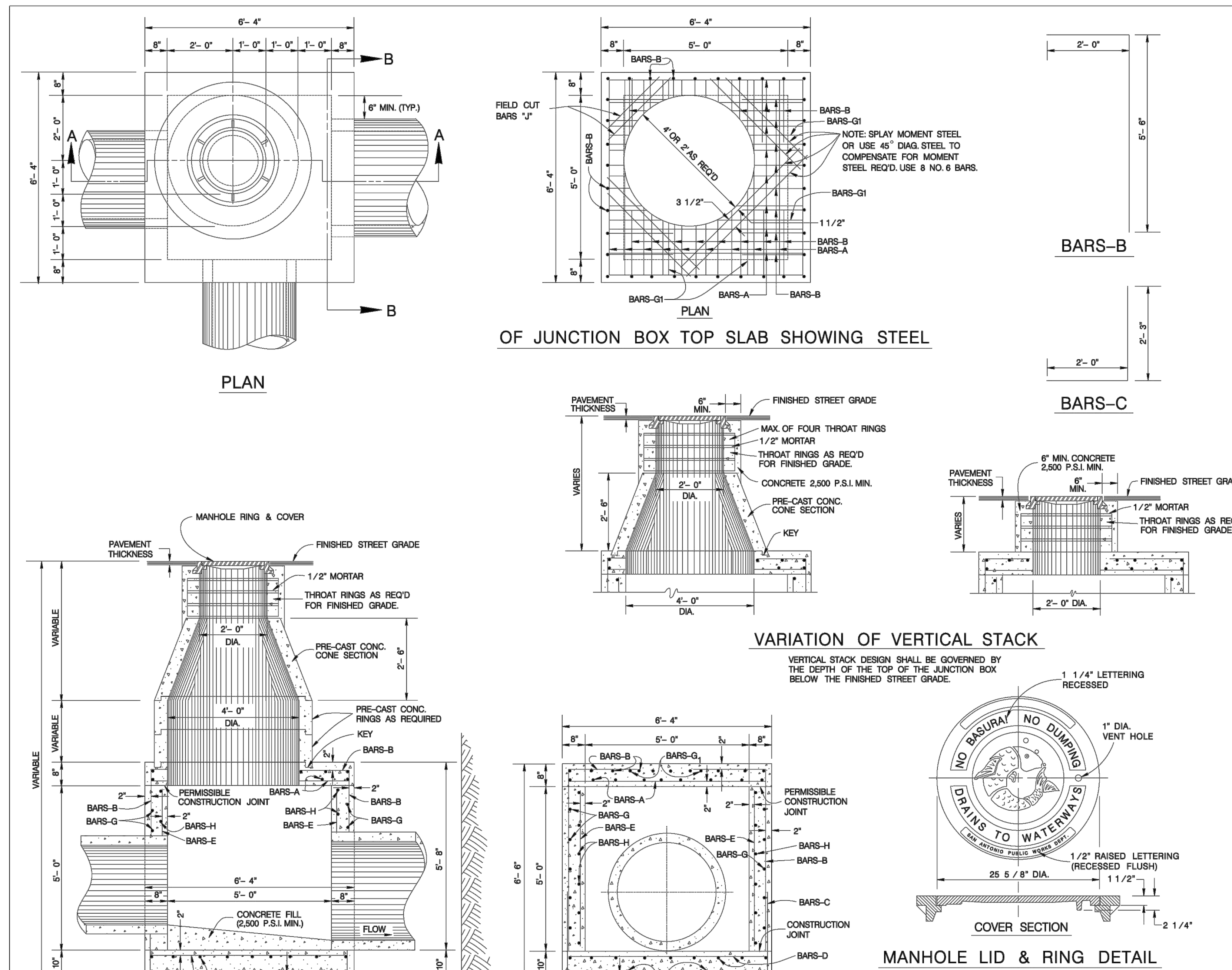

NOTES FOR MANHOLE LID AND RING

1. FOR LID DESIGN OUTSIDE OF CITY OF SAN ANTONIO, DELETE "SAN ANTONIO PUBLIC WORKS DEPT.".
2. CASTING NUMBER AND MANUFACTURER'S I.D. ON LID AND RING.
3. LOAD BEARING CAPABILITY OF HS–20 MINIMUM.
4. THE LOAD BEARING SURFACES SHALL BE MACHINE GROUND.
5. THE COMBINED WEIGHT OF THE MANHOLE RING AND COVER MUST BE AT LEAST 260 LBS.

SCHEDULE FOR REINFORCING STEEL

SHAPE	BAR	NO.	SIZE	SPACING	LENGTH	WEIGHT
STRAIGHT	A	18	4	9" O.C.	6'– 1"	73
	B	36	5	8" O.C.	7'– 6"	282
	C	36	5	8" O.C.	4'– 3"	160
STRAIGHT	D	18	4	9" O.C.	6'– 1"	73
STRAIGHT	E	20	3	12" O.C.	4'– 11"	37
STRAIGHT	G	20	4	12" O.C.	6'– 1"	81
STRAIGHT	G_1	8	4	AS SHOWN	6'– 1"	33
STRAIGHT	H	24	3	12" O.C.	5'– 5"	49
STRAIGHT	J	8	6	3 1/2" O.C.	4'– 11"	59
					TOTAL	847 lbs.

CLASS "A" CONCRETE – 5.03 CU. YDS. (DOES NOT EXCLUDE MANHOLE OPENINGS OR PIPE OPENING)

* NOTE: BAR SIZE AND SPACING BASED ON SPANS AS SHOWN – ANY REVISIONS TO THESE SPANS SHALL INCLUDE A RE–DESIGN ON STEEL REQD.

1. CONCRETE FOR STRUCTURE SHALL BE CLASS "A" 3,000 P.S.I. AT 28 DAYS.
2. ALL EXPOSED EDGES SHALL BE CHAMFERED 3⁄4".
3. REINFORCING STEEL SHALL BE NEW BILLET STEEL, INTERMEDIATE GRADE, ASTM A–15. THE DEFORMATION SHALL CONFORM TO ASTM A–305.
4. ALL DIMENSIONS RELATING TO REINFORCING STEEL ARE TO CENTER OF BARS.
5. ALL BARS INTERCEPTING MANHOLE OPENING AND REINFORCED CONCRETE PIPE SHALL BE FIELD–CUT.
6. WHERE LAPPING OF BARS IS REQUIRED, A MINIMUM LAP OF 33 DIAMETERS SHALL BE USED.
7. INVERT OF JUNCTION BOX TO BE SHAPED WITH CONCRETE FILL (2,500 P.S.I. MIN.) TO EFFECT DRAINAGE TO OUTLET PIPE. COST SUBSIDIARY TO CLASS "A" CONCRETE (JUNCTION BOXES).
8. PAYMENT FOR ALL EXCAVATION, BACKFILLING, CONCRETE, REINFORCING STEEL, VERTICAL STACK, RING AND COVER SHALL BE INCLUDED IN THE UNIT COST OF ITEM 403 – "STORM SEWER JUNCTION BOXES AND INLETS".

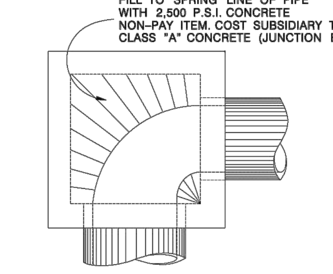

CURVED DEFLECTOR DETAIL

JANUARY 2005

CITY OF SAN ANTONIO
CAPITAL IMPROVEMENTS MANAGEMENT SERVICES DEPARTMENT

5'x5'x5' JUNCTION BOX STANDARDS

____% SUBMITTAL PROJECT NO.:____ DATE:____
DRWN. BY:____ DSGN. BY:____ CHKD. BY:____ SHEET NO.:___OF___

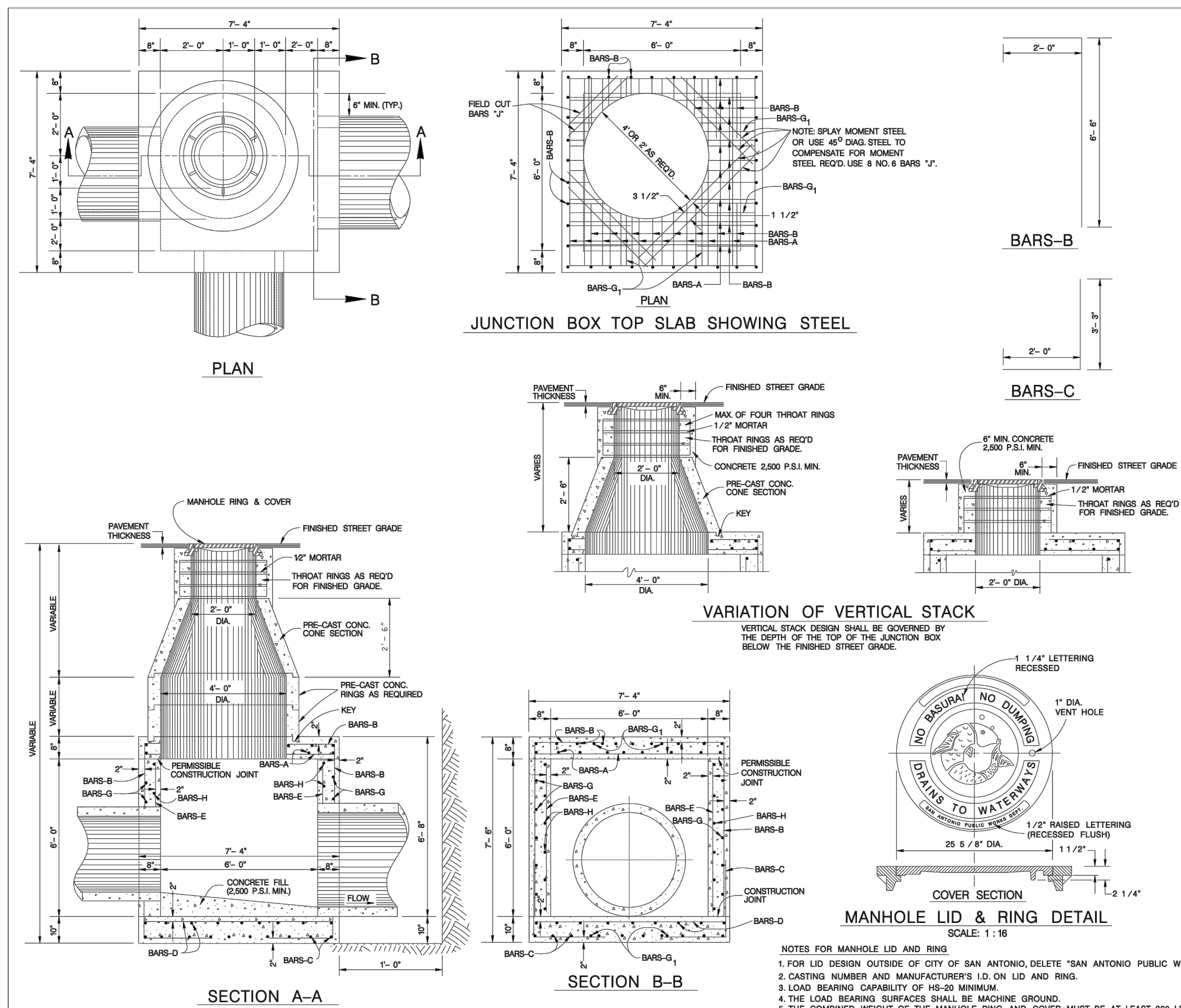

NOTES FOR MANHOLE LID AND RING

1. FOR LID DESIGN OUTSIDE OF CITY OF SAN ANTONIO, DELETE "SAN ANTONIO PUBLIC WORKS DEPT.".
2. CASTING NUMBER AND MANUFACTURER'S I.D. ON LID AND RING.
3. LOAD BEARING CAPABILITY OF HS–20 MINIMUM.
4. THE LOAD BEARING SURFACES SHALL BE MACHINE GROUND.
5. THE COMBINED WEIGHT OF THE MANHOLE RING AND COVER MUST BE AT LEAST 260 LBS.

SCHEDULE FOR REINFORCING STEEL

SHAPE	BAR	NO.	SIZE	SPACING	LENGTH	WEIGHT
STRAIGHT	A	21	4	9" O.C.	7'– 1"	99
	B	46	5	8" O.C.	8'– 6"	408
	C	46	5	8" O.C.	5'– 3"	252
STRAIGHT	D	21	4	9" O.C.	7'– 1"	99
STRAIGHT	E	28	3	12" O.C.	5'– 11"	62
STRAIGHT	G	20	4	12" O.C.	7'– 1"	95
STRAIGHT	G_1	8	4	AS SHOWN	6'– 1"	33
STRAIGHT	H	27	3	12" O.C.	7'– 1"	72
STRAIGHT	J	8	6	3 1/2" O.C.	4'– 11"	59
					TOTAL	1,179 LBS.

CLASS "A" CONCRETE – 6.94 CU. YDS. (DOES NOT EXCLUDE MANHOLE OPENINGS OR PIPE OPENING)

* NOTE: BAR SIZE AND SPACING BASED ON SPANS AS SHOWN – ANY REVISIONS TO THESE SPANS SHALL INCLUDE A RE–DESIGN ON STEEL REQ'D.

1. CONCRETE FOR STRUCTURE SHALL BE CLASS "A" 3,000 P.S.I. AT 28 DAYS.
2. ALL EXPOSED EDGES SHALL BE CHAMFERED 3 /4".
3. REINFORCING STEEL SHALL BE NEW BILLET STEEL, INTERMEDIATE GRADE, ASTM A–15. THE DEFORMATION SHALL CONFORM TO ASTM A–305.
4. ALL DIMENSIONS RELATING TO REINFORCING STEEL ARE TO CENTER OF BARS.
5. ALL BARS INTERCEPTING MANHOLE OPENING AND REINFORCED CONCRETE PIPE SHALL BE FIELD–CUT.
6. WHERE LAPPING OF BARS IS REQUIRED, A MINIMUM LAP OF 33 DIAMETERS SHALL BE USED.
7. INVERT OF JUNCTION BOX TO BE SHAPED WITH CONCRETE FILL (2,500 P.S.I. MIN.) TO EFFECT DRAINAGE TO OUTLET PIPE. COST SUBSIDIARY TO CLASS "A" CONCRETE (JUNCTION BOXES).
8. PAYMENT FOR ALL EXCAVATION, BACKFILLING, CONCRETE, REINFORCING STEEL, VERTICAL STACK, RING AND COVER SHALL BE INCLUDED IN THE UNIT COST OF ITEM 403 – "STORM SEWER JUNCTION BOXES AND INLETS".

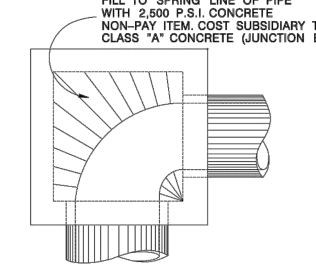

CURVED DEFLECTOR DETAIL

JANUARY 2005

CITY OF SAN ANTONIO
CAPITAL IMPROVEMENTS MANAGEMENT SERVICES DEPARTMENT

6'x6'x6' JUNCTION BOX STANDARDS

____% SUBMITTAL PROJECT NO.:____ DATE:____
DRWN. BY:____ DSGN. BY:____ CHKD. BY:____ SHEET NO.:___OF___

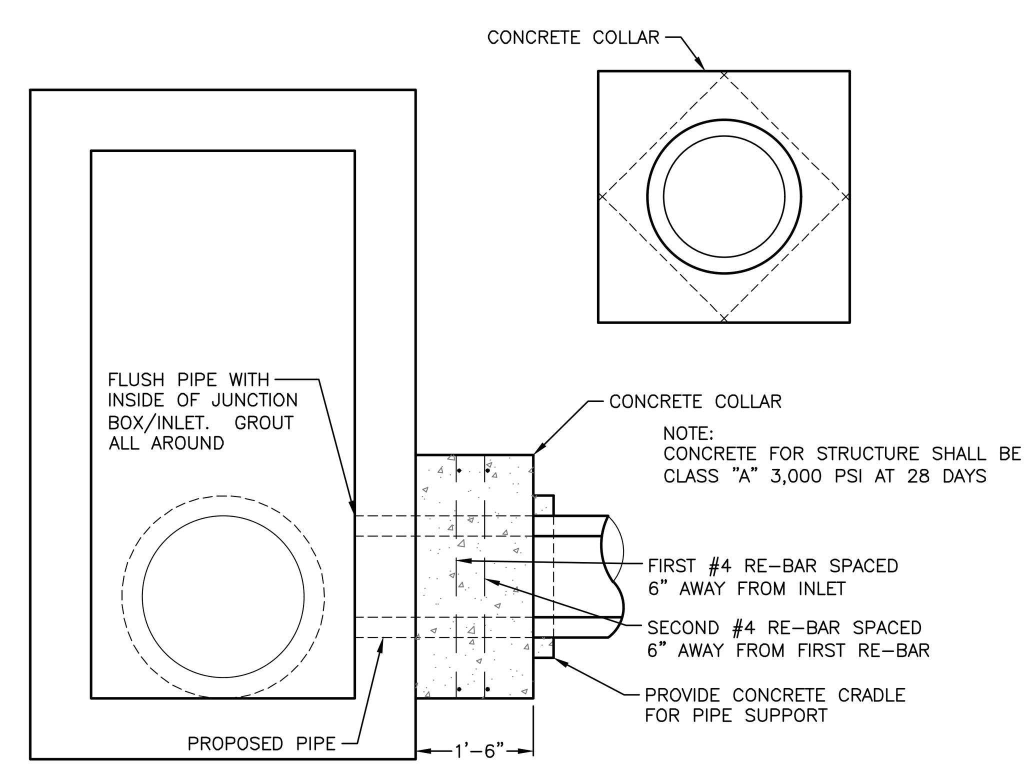

CONCRETE COLLAR DETAIL

NOT–TO–SCALE

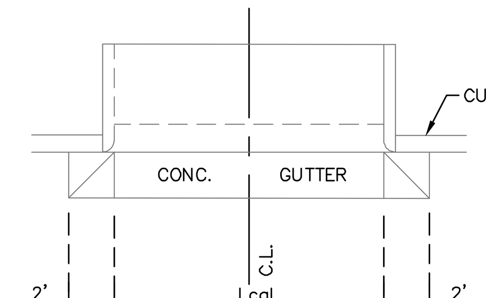

TYPICAL DRAINAGE CURB OPENING DETAIL

NOT–TO–SCALE

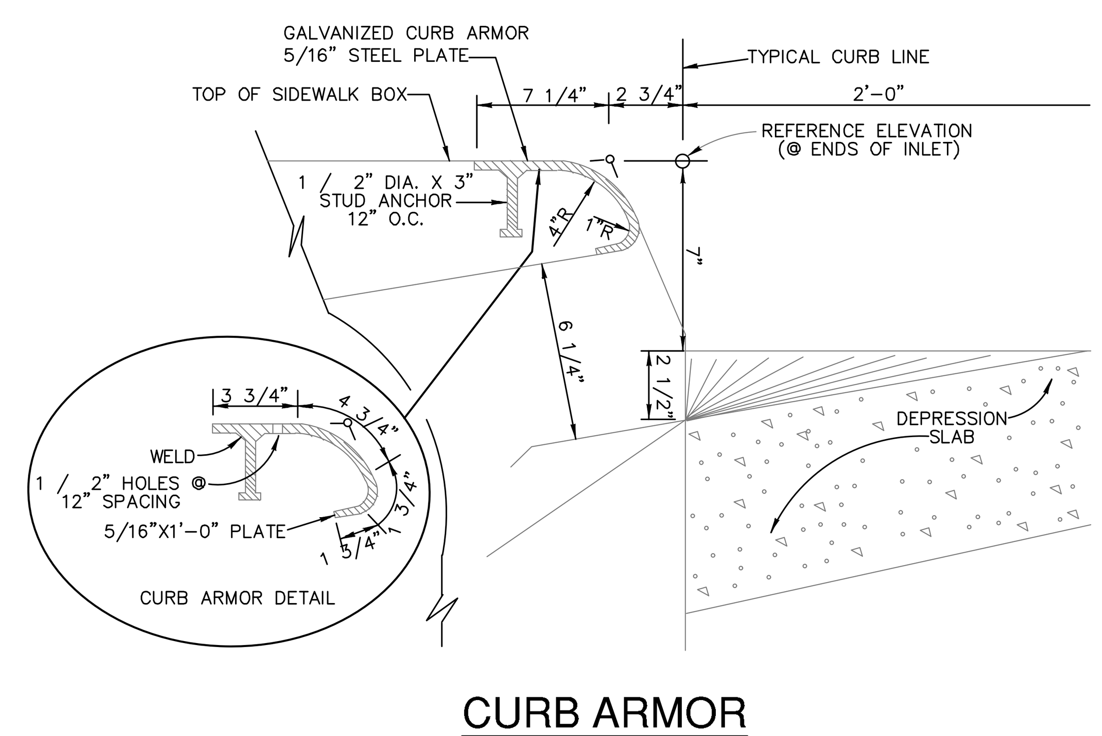

CURB ARMOR DETAIL

NOT–TO–SCALE

NO.	REVISION	DATE

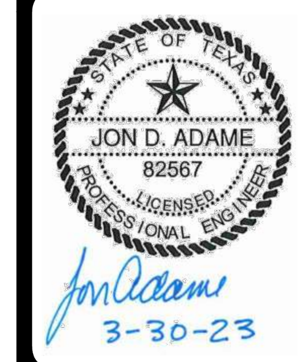

PAPE-DAWSON ENGINEERS
SAN ANTONIO I AUSTIN I HOUSTON I FORT WORTH I DALLAS
2000 NW LOOP 410 I SAN ANTONIO, TX 78213 I 210.375.9000
TEXAS ENGINEERING FIRM #470 I TEXAS SURVEYING FIRM #10028800

SMILEY TRACT UNIT 1
SAN ANTONIO, TEXAS

DRAINAGE DETAILS

PLAT NO. 22-11800482
JOB NO. 11100–97
DATE MARCH 2023
DESIGNER AA
CHECKED VS DRAWN AA
SHEET C1.18

Date: Mar 30, 2023, 5:04pm User ID: aatry
File: P:\111\00\97\Design\Civil\SDDT-1110097.dwg

THIS DOCUMENT HAS BEEN PRODUCED FROM MATERIAL THAT WAS STORED AND/OR TRANSMITTED ELECTRONICALLY AND MAY HAVE BEEN INADVERTENTLY ALTERED. RELY ONLY ON FINAL HARDCOPY MATERIALS BEARING THE CONSULTANT'S ORIGINAL SIGNATURE AND SEAL. AERIAL IMAGERY PROVIDED BY GOOGLE© UNLESS OTHERWISE NOTED. Imagery © 2016,CAPCOG,Digital Globe,Texas Orthoimagery Program, USDA Farm Service Agency.

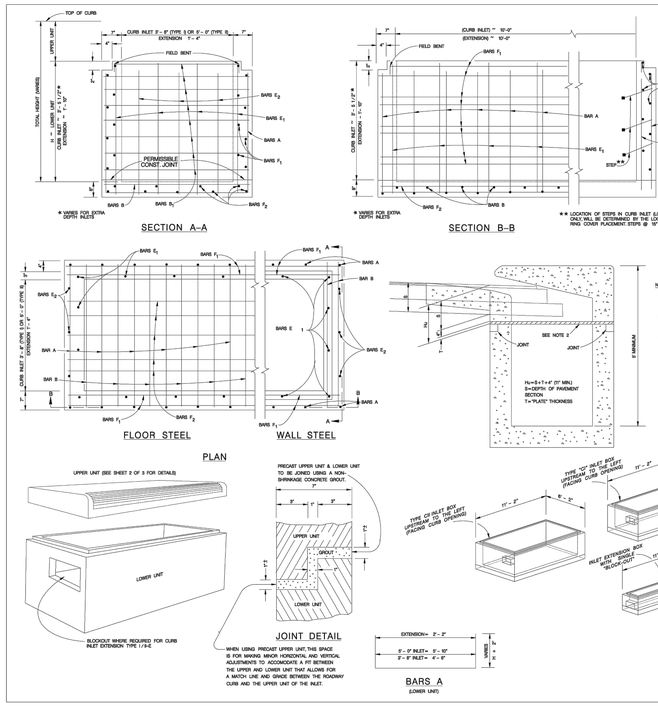

REINFORCING STEEL

LOWER UNIT 10' X 3'–8" (TYPE I)				
BAR	NO.	SIZE	SPAC.	LENGTH
A	12	#4	12"	VARIES
B	11	#4	12"	4'-4"
B_1	VARIES	#4	12"	4'-4"
E_1	20	#4	18"±	VARIES
E_2	6	#4	18"±	VARIES
F_1	VARIES	#4	12"±	10'-10"
F_2	9	#4	----	10'-10"

LOWER UNIT 10' X 5'– 0" (TYPE II)				
BAR	NO.	SIZE	SPAC.	LENGTH
A	12	#4	12"	VARIES
B	11	#4	12"	5'-10"
B_1	VARIES	#4	12"	5'-10"
E_1	22	#4	18"±	VARIES
E_2	8	#4	18"±	VARIES
F_1	VARIES	#4	12"±	10'-10"
F_2	11	#4	----	10'-10"

GENERAL NOTES

1. IF INLETS AND # EXTENSIONS MUST BE IN ACCORDANCE WITH THE LATEST TXDOT CURB INLET TYPE "C" AND EXTENSION TYPE E (S.C).
2. TYPE C-8 INLET TO BE USED ONLY WHEN STORM DRAIN PIPE IS IN-LINE WITH CURB INLET AND APPROVED BY THE ENGINEER.
3. QUANTITIES SHOWN ARE FOR CONTRACTORS INFORMATION ONLY.
4. CONCRETE FOR STRUCTURES SHALL BE CLASS "H", 3000 PSI IN 28 DAYS.
5. ALL DIMENSIONS RELATING TO REINFORCING STEEL ARE TO CENTER OF BARS.
6. ALL REINFORCING STEEL SHALL HAVE A MINIMUM COVER OF 1 1/2".
7. ALL REINFORCING STEEL SHALL CONFORM TO A.S.T.M. A-615, GRADE 60 REQUIREMENTS.
8. ALL EXPOSED CORNERS SHALL BE CHAMFERED 3 / 4".
9. DEPRESSION SLAB SHALL RECEIVE A WOOD FLOAT FINISH.
10. FACE OF INLET TO CONFORM TO FACE OF CURB LINE.
11. ALL BARS INTERCEPTING MANHOLE RING & COVER SHALL BE CUT OR BENT.
12. PAYMENT FOR ALL EXCAVATION, BACK-FILLING, CONCRETE, REINFORCING STEEL, RING AND COVER, CURB ARMOR AND STEPS SHALL BE INCLUDED IN THE UNIT COST OF ITEM 403 "STORM SEWER JUNCTION BOXES AND INLETS".
13. CAST IRON MANHOLE RING AND COVER TO BE PLACED NEXT TO OUTLET PIPE,EXCEPT FOR VERTICAL OUTLET PIPE IN WHICH CASE MANHOLE RING AND COVER WILL BE OFFSET.
14. GALVANIZED BOLTS,NUTS,WASHERS,PLATES AND GASKETS ARE SUBSIDIARY TO INLETS.
15. THE CONTRACTOR SHALL PROVIDE AN ADEQUATE MEANS TO LIFT AND PLACE THE INLETS,WHEN USING PRECAST UNITS.
16. ALL BARS AT PIPE BLOCKOUT LOCATIONS SHALL BE CUT OR BENT.
17. ALL LOWER UNITS SHALL RECEIVE INNERT MORTAR SHAPING.
18. PIPE BLOCKOUTS IN INLET WALLS SHOULD NOT EXCEED 3" BEYOND THE OUTER SHELL OF THE PIPE,TAKING INTO ACCOUNT THE SKEW OF THE PIPE AS NECESSARY. CONSTRUCTION JOINT MAY BE INSERED A MAXIMUM OF 6".

PHASE CONSTRUCTION

NOTES FOR PHASE CONSTRUCTION (WHEN DIRECTED BY THE ENGINEER):

1. THE CURB INLET AND EXTENSION SHALL BE CONSTRUCTED TO A DEPTH "Hu" BELOW THE INLET AND EXTENSION GUTTER LINE ELEVATION.
2. CAP THE CURB INLET AND EXTENSION WITH A STEEL PLATE APPROVED BY THE ENGINEER AND CONSTRUCT THE ROADWAY OVER THE PLATE.
3. AFTER THE ROADWAY IS COMPLETED,BUT PRIOR TO THE FINAL HMAC OVERLAY,SAW CUT THE PAVEMENT,REMOVE THE PLATE AND COMPLETE THE UPPER PORTION OF THE CURB INLET AND /OR EXTENSION.

MAY 2009
CITY OF SAN ANTONIO
CAPITAL IMPROVEMENTS MANAGEMENT SERVICES DEPARTMENT
TYPE "C" INLET (TYPE I & II) & INLET EXTENSION STANDARDS
SHEET 1 OF 3
% SUBMITTAL PROJECT NO.:_____ DATE:_____
DRWN BY: V. VASQUEZ DSGN BY: L.B. MALTOS, P.E. CHKD BY: R.S. HOSSEINI, P.E. SHEET NO.:___OF___

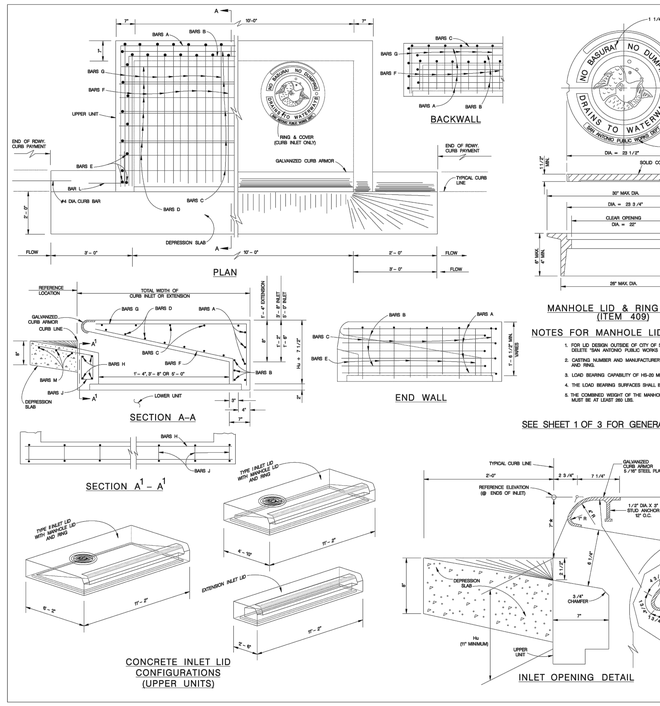

REINFORCING STEEL (FOR Hu=11")

UPPER UNIT 10' X 3'–8" (TYPE I)					
BAR	NO.	SIZE	SPAC.	LENGTH	WEIGHT
A	4	#4	----	10'-10"	53
B	3	#4	----	10'-10"	38
C	5	#4	11"	13'-2"	44
D	7	#4	8"	10'-10"	51
E	12	#4	11"	1'-2"	9
F	21	#6	8"	4'-8"	147
G	22	#6	8"	5'-8"	187
H	4	#4	----	10'-10"	29
J	12	#4	12"	3'-8"	29
L	4	#4	----	3'-0"	8
M	3	#4	----	14'-8"	29
TOTAL WEIGHT					620 LBS.

UPPER UNIT 10' X 5' (TYPE II)					
BAR	NO.	SIZE	SPAC.	LENGTH	WEIGHT
A	4	#4	----	22'-8"	60
B	3	#4	----	22'-8"	43
C	7	#4	11"	13'-2"	62
D	11	#4	8"	10'-10"	80
E	16	#4	11"	1'-2"	13
F	21	#6	8"	5'-8"	179
G	22	#6	8"	7'-2"	220
H	4	#4	----	10'-10"	29
J	12	#4	12"	3'-8"	29
L	4	#4	----	3'-0"	5
M	3	#4	----	14'-8"	29
TOTAL WEIGHT					759 LBS.

CLASS "A" CONCRETE QUANTITIES (FOR Hu = 11")

DEPRESSION SLAB	C.Y.
10' INLET	0.7
10' EXTENSION	0.7

UPPER UNIT (ONLY)	C.Y.
10' X 3'–8" CURB INLET	1.9
10' X 5'–0" CURB INLET	2.7
10' EXTENSION	1.0

NOTES FOR MANHOLE LID AND RING

1. FOR LID DESIGN OUTSIDE OF CITY OF SAN ANTONIO, DELETE "SAN ANTONIO PUBLIC WORKS DEPT."
2. CASTING NUMBER AND MANUFACTURERS I.D. ON LID AND RING.
3. LOAD BEARING CAPABILITY OF HS-20 MINIMUM.
4. THE LOAD BEARING SURFACES SHALL BE MACHINE GROUND.
5. THE COMBINED WEIGHT OF THE MANHOLE RING AND COVER MUST BE AT LEAST 260 LBS.

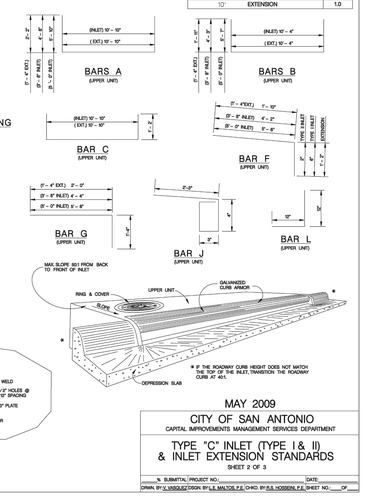

MAY 2009
CITY OF SAN ANTONIO
CAPITAL IMPROVEMENTS MANAGEMENT SERVICES DEPARTMENT
TYPE "C" INLET (TYPE I & II) & INLET EXTENSION STANDARDS
SHEET 2 OF 3
% SUBMITTAL PROJECT NO.:_____ DATE:_____
DRWN BY: V. VASQUEZ DSGN BY: L.B. MALTOS, P.E. CHKD BY: R.S. HOSSEINI, P.E. SHEET NO.:___OF___

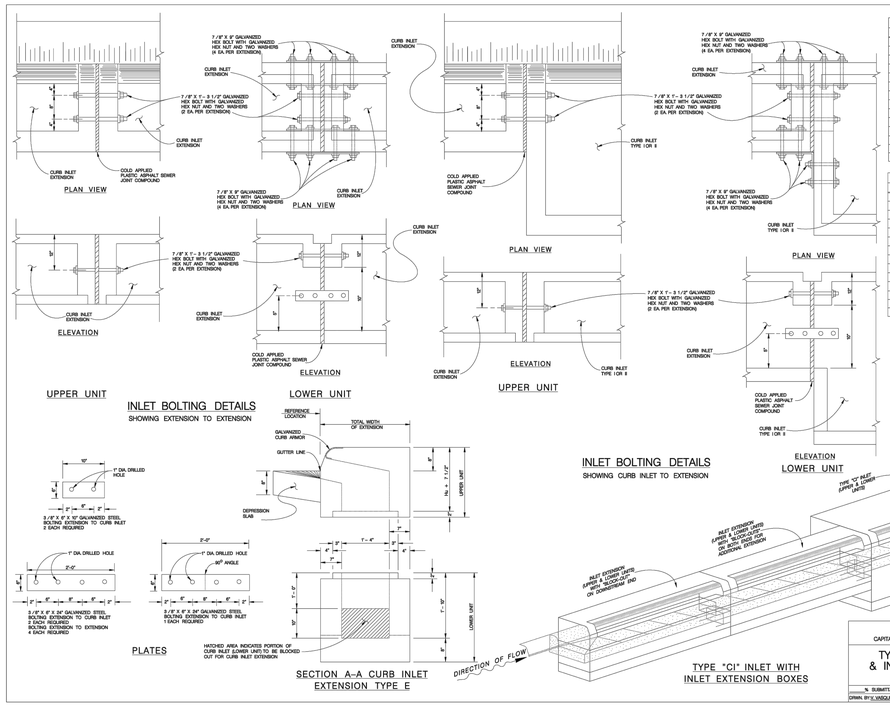

UPPER UNIT EXTENSION (FOR Hu = 11")

BAR	NO.	SIZE	SPAC.	LENGTH	WEIGHT
A	4	#4	----	10'-2"	41
B	3	#4	----	14'-2"	28
C	3	#4	11"	13'-2"	26
D	3	#4	8"	10'-10"	22
E	8	#4	11"	1'-1"	6
F	21	#6	8"	2'-0"	63
G	22	#6	8"	2'-4"	110
H	4	#4	----	10'-10"	29
J	12	#4	12"	3'-8"	29
L	4	#4	----	2'-0"	5
M	3	#4	----	14'-8"	29
REINFORCING STEEL				LBS.	387
CLASS "A" CONCRETE				C.Y.	1.0

LOWER UNIT EXTENSION

BAR	NO.	SIZE	SPAC.	LENGTH	WEIGHT
A	12	#4	12"	6'-2"	49
B	4	#4	12"	2'-2"	18
B_1	3	#4	12"	2'-2"	4
E_1	18	#4	18"±	2'-2"	27
E_2	4	#4	18"±	2'-1"	6
F_1	16	#4	12"±	10'-10"	116
F_2	5	#4	----	10'-10"	36
REINFORCING STEEL				LBS.	254
CLASS "A" CONCRETE				C.Y.	1.4

GENERAL NOTES

1. WHEN INLET EXTENSIONS ARE REQUIRED FOR ON GRADE INLETS THE EXTENSIONS SHALL BE PLACED ON THE UPSTREAM END OF THE INLET.
2. FOR CURB INLET EXTENSION REINFORCING STEEL,NOTES & VARIOUS OTHER APPLICABLE DETAILS NOT FOUND ON THIS SHEET,REFER TO SHEETS 1 & 2.

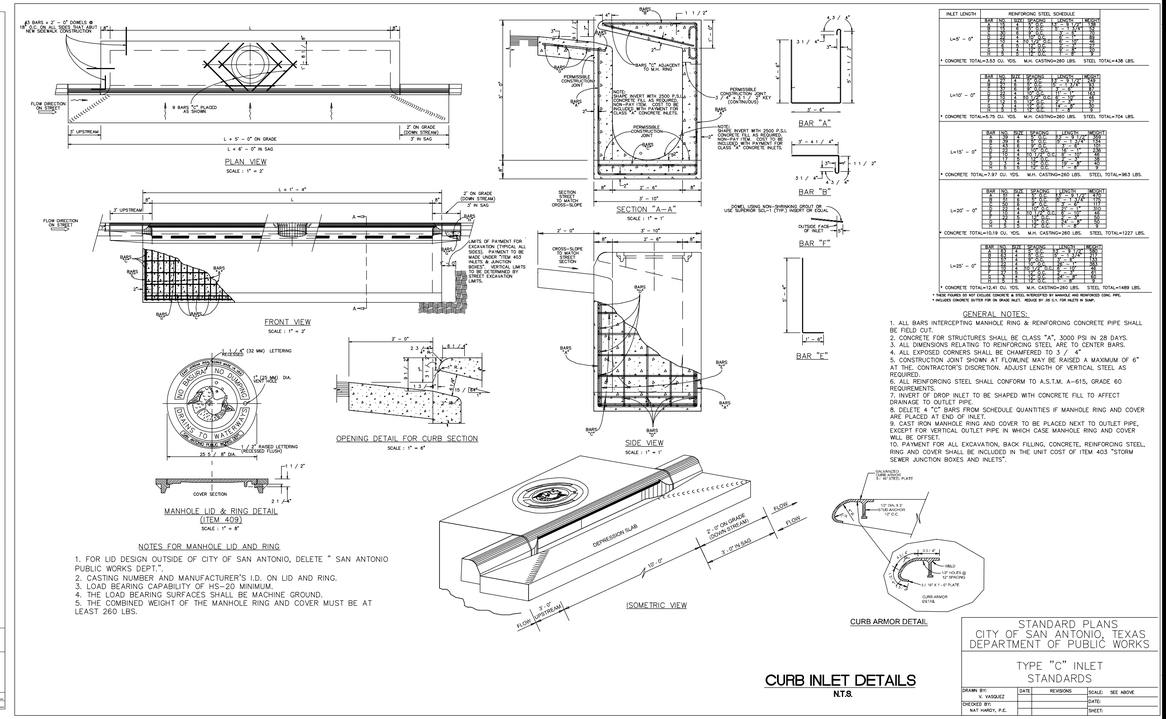

NOTES FOR MANHOLE LID AND RING

1. FOR LID DESIGN OUTSIDE OF CITY OF SAN ANTONIO, DELETE " SAN ANTONIO PUBLIC WORKS DEPT."
2. CASTING NUMBER AND MANUFACTURER'S I.D. ON LID AND RING.
3. LOAD BEARING CAPABILITY OF HS-20 MINIMUM.
4. THE LOAD BEARING SURFACES SHALL BE MACHINE GROUND.
5. THE COMBINED WEIGHT OF THE MANHOLE RING AND COVER MUST BE AT LEAST 260 LBS.

INLET LENGTH	REINFORCING STEEL SCHEDULE						
	BAR	NO.	SIZE	SPACING	LENGTH	WEIGHT
L=5' – 0"	A	3	#4	----	5'-2"	11
	B	3	#4	----	5'-2"	11
	C	3	#4	11"	13'-2"	26
	D	3	#4	8"	10'-10"	22
	E	8	#4	11"	1'-1"	6
	F	21	#6	8"	2'-0"	63
	G	22	#6	8"	2'-4"	110
	H	4	#4	----	10'-10"	29
	J	12	#4	12"	3'-8"	29
	L	4	#4	----	2'-0"	5
	M	3	#4	----	14'-8"	29
* CONCRETE TOTAL=3.53 CU. YDS. M.H. CASTING=260 LBS. STEEL TOTAL=438 LBS.						
L=10' – 0"	A	4	#4	----	10'-2"	41
	B	3	#4	----	14'-2"	28
	C	3	#4	11"	13'-2"	26
	D	3	#4	8"	10'-10"	22
	E	8	#4	11"	1'-1"	6
	F	21	#6	8"	2'-0"	63
	G	22	#6	8"	2'-4"	110
	H	4	#4	----	10'-10"	29
	J	12	#4	12"	3'-8"	29
	L	4	#4	----	2'-0"	5
	M	3	#4	----	14'-8"	29
* CONCRETE TOTAL=5.75 CU. YDS. M.H. CASTING=260 LBS. STEEL TOTAL=754 LBS.						
L=15' – 0"	A	5	#4	----	15'-2"	76
	B	4	#4	----	14'-2"	38
	C	3	#4	11"	13'-2"	26
	D	3	#4	8"	10'-10"	22
	E	8	#4	11"	1'-1"	6
	F	21	#6	8"	2'-0"	63
	G	22	#6	8"	2'-4"	110
	H	4	#4	----	10'-10"	29
	J	12	#4	12"	3'-8"	29
	L	4	#4	----	2'-0"	5
	M	3	#4	----	14'-8"	29
* CONCRETE TOTAL=7.97 CU. YDS. M.H. CASTING=260 LBS. STEEL TOTAL=963 LBS.						
L=20' – 0"	A	6	#4	----	20'-2"	121
	B	5	#4	----	19'-2"	96
	C	3	#4	11"	13'-2"	26
	D	3	#4	8"	10'-10"	22
	E	8	#4	11"	1'-1"	6
	F	21	#6	8"	2'-0"	63
	G	22	#6	8"	2'-4"	110
	H	4	#4	----	10'-10"	29
	J	12	#4	12"	3'-8"	29
	L	4	#4	----	2'-0"	5
	M	3	#4	----	14'-8"	29
* CONCRETE TOTAL=10.19 CU. YDS. M.H. CASTING=260 LBS. STEEL TOTAL=1227 LBS.						
L=25' – 0"	A	7	#4	----	25'-2"	176
	B	6	#4	----	24'-2"	121
	C	3	#4	11"	13'-2"	26
	D	3	#4	8"	10'-10"	22
	E	8	#4	11"	1'-1"	6
	F	21	#6	8"	2'-0"	63
	G	22	#6	8"	2'-4"	110
	H	4	#4	----	10'-10"	29
	J	12	#4	12"	3'-8"	29
	L	4	#4	----	2'-0"	5
	M	3	#4	----	14'-8"	29
* CONCRETE TOTAL=12.41 CU. YDS. M.H. CASTING=260 LBS. STEEL TOTAL=1489 LBS.						

* NOTE THAT BARS ARE NOT EXCLUDE CONCRETE & STEEL REPRESENTED BY MANHOLE AND REINFORCED CONC. PIPE.
* INCLUDES CONCRETE OUTSIDE FOR ON GRADE INLET. REQUIRE BY JOB G.1. FOR PAYMENT IN SUMP.

GENERAL NOTES:

1. ALL BARS INTERCEPTING MANHOLE RING & REINFORCING CONCRETE PIPE SHALL BE FIELD CUT.
2. CONCRETE FOR STRUCTURES SHALL BE CLASS "A", 3000 PSI IN 28 DAYS.
3. ALL DIMENSIONS RELATING TO REINFORCING STEEL ARE TO CENTER BARS.
4. ALL EXPOSED CORNERS SHALL BE CHAMFERED TO 3 / 4".
5. CONSTRUCTION JOINT SHOWN AT FLOWLINE MAY BE RAISED A MAXIMUM OF 6" AT THE CONTRACTOR'S DISCRETION. ADJUST LENGTH OF VERTICAL STEEL AS REQUIRED.
6. ALL REINFORCING STEEL SHALL CONFORM TO A.S.T.M. A–615, GRADE 60 REQUIREMENTS.
7. INVERT OF DROP INLET TO BE SHAPED WITH CONCRETE FILL TO AFFECT DRAINAGE TO OUTLET PIPE.
8. DELETE 4 "C" BARS FROM SCHEDULE QUANTITIES IF MANHOLE RING AND COVER ARE PLACED AT END OF INLET.
9. CAST IRON MANHOLE RING AND COVER TO BE PLACED NEXT TO OUTLET PIPE, EXCEPT FOR VERTICAL OUTLET PIPE IN WHICH CASE MANHOLE RING AND COVER WILL BE OFFSET.
10. PAYMENT FOR ALL EXCAVATION, BACK FILLING, CONCRETE, REINFORCING STEEL, RING AND COVER SHALL BE INCLUDED IN THE UNIT COST OF ITEM 403 "STORM SEWER JUNCTION BOXES AND INLETS".

STANDARD PLANS
CITY OF SAN ANTONIO, TEXAS
DEPARTMENT OF PUBLIC WORKS

TYPE "C" INLET STANDARDS

DRAWN BY: V. VASQUEZ	DATE	REVISIONS	SCALE: SEE ABOVE
CHECKED BY: RAT HARDY, P.E.			DATE:
			SHEET:

NO.	REVISION	DATE

STATE OF TEXAS
JON D. ADAME
82567
LICENSED PROFESSIONAL ENGINEER
3-30-23

PAPE-DAWSON ENGINEERS
SAN ANTONIO I AUSTIN I HOUSTON I FORT WORTH I DALLAS
2000 NW LOOP 410 I SAN ANTONIO, TX 78213 I 210.375.9000
TEXAS ENGINEERING FIRM #470 I TEXAS SURVEYING FIRM #10028800

SMILEY TRACT UNIT 1
SAN ANTONIO, TEXAS
DRAINAGE DETAILS

PLAT NO. 22-11800482
JOB NO. 11100–97
DATE MARCH 2023
DESIGNER AA
CHECKED VS DRAWN AA
SHEET C1.19

Date: Mar 30, 2023, 5:04pm User ID: oatry
File: P:\111\00\97\Design\Civil\SDDT-1110097.dwg

THIS DOCUMENT HAS BEEN PRODUCED FROM MATERIAL THAT WAS STORED AND/OR TRANSMITTED ELECTRONICALLY AND MAY HAVE BEEN INADVERTENTLY ALTERED. RELY ONLY ON FINAL HARDCOPY MATERIALS BEARING THE CONSULTANT'S ORIGINAL SIGNATURE AND SEAL. AERIAL IMAGERY PROVIDED BY GOOGLE© UNLESS OTHERWISE NOTED. Imagery © 2016,CAPCOG,Digital Globe,Texas Orthoimagery Program, USDA Farm Service Agency.

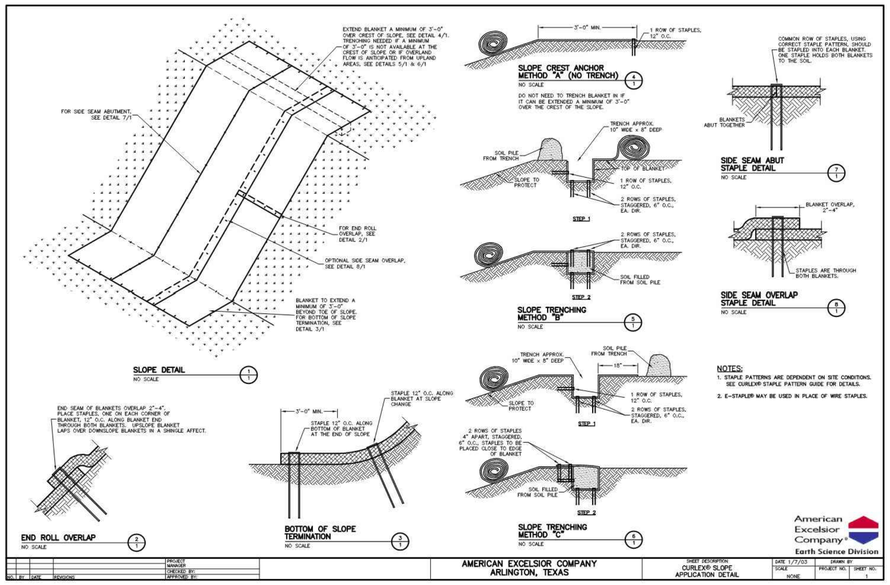

Product Description

Curlex® Blankets

Excelsior Erosion Control Blankets

American Excelsior Company is the inventor of biodegradable erosion control blankets. Developed in the early 60's, Curlex excelsior blankets are specifically designed to actually promote ideal growing conditions for grass seed, while simultaneously protecting topsoil from wind and water erosion. Curlex excelsior blankets have long passed the test of time. By design, Curlex blankets have a built-in swell factor - wet curled excelsior fibers sightly expand in thickness and interlock to form a strong, fiber matrix. This allows the fibers to provide intimate contact with local terrain. Water flow is trained to follow the curled fiber matrix. The roughness of the curled excelsior matrix slows the velocity to a point where gravity takes over, which allows moisture to slowly seep into the topsoil to promote ideal growing conditions.

Material Characteristics

Curlex blankets consist of unique softly barbed, interlocking, curled, Aspen excelsior fibers. They are weed seed free. Curlex blankets are available with a variety of environmentally sensitive and/or stronger netting types to match job site requirements. We offer a green color-coded plastic netting for applications requiring UV resistance strength and longevity. Our photodegradable QuickMow™ netting is recommended for urban, golf course, and certain roadside projects. It is color-coded white to identify it as a rapid break-down, polypropylene netting designed for use in areas to be mowed. Also available is our FibreNet™ - 100% biodegradable netting - for use in critical environmentally sensitive areas.

Most straight-line fiber blankets draw the line at 0.270 kg/m² (.50 lb/yd²), but not Curlex. At just under 0.400 kg/m² (.75 lb/yd²) Curlex blankets bring 50% more erosion control fibers to your job site. Curlex blankets are available in natural Aspen or QuickGRASS® (green). Combine that with a roll that's wider than conventional blankets and you have today's most effective and efficient, multi-purpose degradable erosion control blanket. Curlex excelsior blankets are available individually wrapped or in master packs to allow for mechanical unloading and stacking.

Performance Capabilities

Product	Slopes	Shear Stress Rating
Curlex I	2H:1V & flatter	84 Pa (1.75 lb/ft²)
Curlex II	1.5H:1V & flatter	108 Pa (2.25 lb/ft²)

Typical Applications

- Highway embankments, ditch bottoms and slopes, bridges, approaches and medians
- Residential, commercial, & industrial developments
- Urban drainage, stream banks, and waterways
- Golf course fairways, roughs, waterways, & drop structures
- Landfill caps, side slopes, and let down structures
- Pipeline right-of-ways

American Excelsior Company®
Earth Science Division
Arlington, Texas (800) 777-SOIL • www.curlex.com

MADE IN THE U.S.A.

American Excelsior Company®
Earth Science Division

Curlex® Blankets

Excelsior Erosion Control Blankets

SUGGESTED SPECIFICATIONS

Curlex Single Net (Curlex I)

A specific cut of Great Lakes Aspen curled wood excelsior with 80% six-inch fibers or greater fiber length. It shall be of consistent thickness, with fibers evenly distributed throughout the entire area of the blanket. The top of each blanket shall be covered with photodegradable or biodegradable netting. Material shall not contain any weed seed or chemical additives.

Specifications

Recommended Use:	Slopes to 2H:1V, Channel to 7 ft/s, shear stress to 1.75 lb/ft²
Standard Roll Sizes:	4ft x 112.5ft (50 yd²), 8ft x 112.5ft (100 yd²), 16ft x 112.5ft (200 yd²)
FibreNet Roll Sizes:	4ft x 101.25ft (45 yd²), 8ft x 101.25ft (90 yd²)
Weight[a]:	.73 lb/yd²
Netting Options:	Green, QuickMow White (90 day), FibreNet
Color:	Natural Aspen or QuickGRASS Green

Curlex Double Net (Curlex II)

A specific cut of Great Lakes Aspen curled wood excelsior with 80% six-inch fibers or greater fiber length. It shall be of consistent thickness, with fibers evenly distributed throughout the entire area of the blanket. The top and bottom of each blanket shall be covered with photodegradable or biodegradable netting. Material shall not contain any weed seed or chemical additives.

Specifications

Recommended Use:	Slopes to 1.5H:1V, Channels to 9 ft/s, shear stress to 2.25 lb/ft²
Standard Roll Sizes:	4ft x 112.5ft (50 yd²), 8ft x 112.5ft (100 yd²), 16ft x 112.5ft (200 yd²)
FibreNet Roll Sizes:	4ft x 101.25ft (45 yd²), 8ft x 101.25ft (90 yd²)
Weight[a]:	.73 lb/yd²
Netting Options:	Green, QuickMow White (90 day), FibreNet
Color:	Natural Aspen or QuickGRASS Green

[a]Weight is based on a dry fiber weight basis at time of manufacture. Baseline moisture content of Great Lakes Aspen Excelsior is 22%.

Installation

Before installing Curlex blankets, the seedbed shall be inspected by the Owner's Representative to ensure it has been properly compacted and fine graded to remove any existing rills. It shall be free of obstructions, such as tree roots, projections such as stones, and other foreign objects. Grass seed shall match soil conditions to allow for maximum germination, dense vegetation, and a structural root system. Contractor shall proceed when satisfactory conditions are present. After the area has been properly shaped, seeded, fertilized, and compacted, locate the start of the roll, making sure the roll is facing toward the area to be covered, and then roll out the blanket. Blankets shall be rolled out flat, even, and smooth without stretching the material then anchored to the subgrade.

Slopes: It is recommended that the blankets be installed in the same direction as the water flow; however, on short slopes it may be more practical to install horizontally across the width of the application. If more than one width is required, simply abut the edges together and secure the blankets with a common row of biodegradable staples, steel staples, or stakes. Overlapping of Curlex excelsior blankets is not required or recommended. An exception is waterway slopes.

Channels: Curlex blankets shall be centered to offset a seam in the middle of the waterway. They shall be installed in the same direction as the water flow. The adjoining blankets shall be installed away from the center of channel and concentrated water flow. They shall be secured by a common row of staples. It is usually not necessary to overlap Curlex blankets; however, a 2n shingle type installation shall be used in waterway slopes applications. Curlex blanket installation should continue up the side slopes 3ft above the anticipated high water elevation. Flanks exposed to runoff, or sheet flow, must be protected by a check slot or trenched. Curlex blankets shall be trenched at the start of the channel and anchored using a staggered staple pattern at end of roll overlaps and end of roll terminations.

Disclaimer: Curlex is a system for erosion control and re-vegetation on slopes and channels. American Excelsior Company (AEC) believes that the information contained herein to be reliable and accurate for use in erosion control and re-vegetation applications. However, since physical conditions vary from job site to job site and even within a given job site, AEC makes no performance guarantees and assumes no obligation or liability for the reliability or accuracy of information contained herein for the results, safety, or suitability of using Curlex, or for damages occurring in connection with the installation of any erosion control product whether or not made by AEC or its affiliates, except as separately and specifically made in writing by AEC. These specifications are subject to change without notice.

MADE IN THE U.S.A.

If you would like to receive more information or consult with one of our Customer Care Center Specialists, please call us toll free at (888-352-9582)
PDF download specifications available in the Technical Support Library at www.curlex.com

Form#235/122116E

NO.	REVISION	DATE

STATE OF TEXAS
JON D. ADAME
82567
LICENSED PROFESSIONAL ENGINEER
3-30-23

PAPE-DAWSON ENGINEERS
SAN ANTONIO I AUSTIN I HOUSTON I FORT WORTH I DALLAS
2000 NW LOOP 410 I SAN ANTONIO, TX 78213 I 210.375.9000
TEXAS ENGINEERING FIRM #470 I TEXAS SURVEYING FIRM #10028800

SMILEY TRACT UNIT 1

SAN ANTONIO, TEXAS

DRAINAGE DETAILS

PLAT NO. 22-11800482
JOB NO. 11100-97
DATE MARCH 2023
DESIGNER AA
CHECKED VS DRAWN AA
SHEET C1.20

Date: Mar 30, 2023, 5:04pm User ID: oatry
File: P:\111\00\97\Design\Civil\SDDT-1110097.dwg

THIS DOCUMENT HAS BEEN PRODUCED FROM MATERIAL THAT WAS STORED AND/OR TRANSMITTED ELECTRONICALLY AND MAY HAVE BEEN INADVERTENTLY ALTERED. RELY ONLY ON FINAL HARDCOPY MATERIALS BEARING THE CONSULTANT'S ORIGINAL SIGNATURE AND SEAL. AERIAL IMAGERY PROVIDED BY GOOGLE© UNLESS OTHERWISE NOTED. Imagery © 2016,CAPCOG,Digital Globe,Texas Orthoimagery Program, USDA Farm Service Agency.

SCALE: 1"= 50'

0' 50' 100' 150'

STREET LEGEND

PROJECT LIMITS	
MAINTAIN GUTTER	
EXISTING CONTOUR	970
WHEELCHAIR RAMP	WCR
CENTERLINE	CL
RADIUS POINT	RP
POINT OF CURVATURE	PC
POINT OF TANGENCY	PT
RETURN	RET
DRAINAGE FLOW ARROW	
TOP OF CURB SPOT ELEVATION	857.30
PAVEMENT ELEVATION	857.00(P) ×
WASHOUT CROWN SECTION	
SIDEWALK (HOMEOWNER'S RESPONSIBILITY)	
SIDEWALK (DEVELOPER'S RESPONSIBILITY)	
DRIVEWAY	

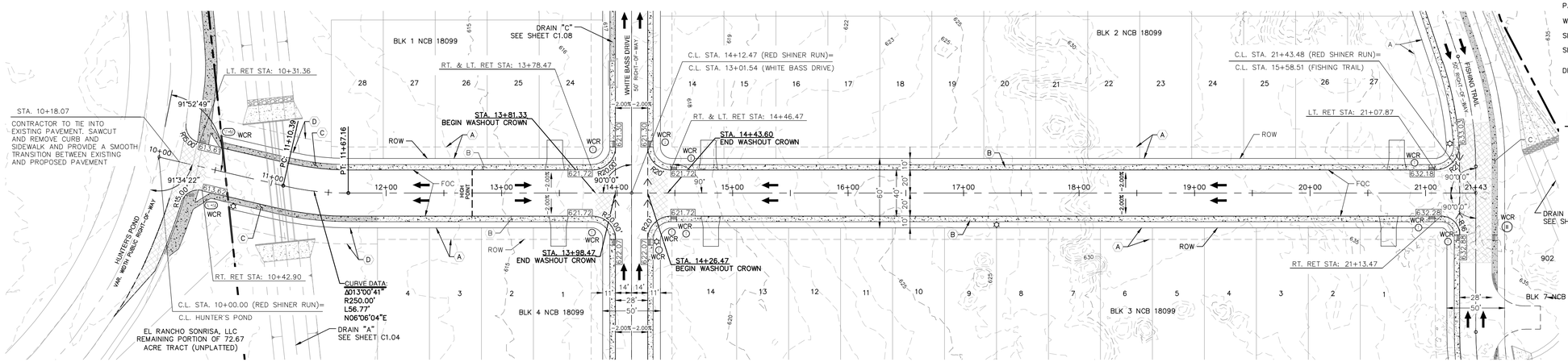

KEY LEGEND:

- (A) 10' ELEC., GAS, TELE., & CA. T.V. EASEMENT
- (B) 4' SIDEWALK
- (C) 4' SIDEWALK (DEVELOPER RESPONSIBILITY)
- (D) 14' ELEC., GAS, TELE., & CA. T.V. EASEMENT

RED SHINER RUN PLAN & PROFILE (STA. 10+00.00 TO END)

VERTICAL SCALE: 1" = 5'
HORIZONTAL SCALE: 1" = 50'

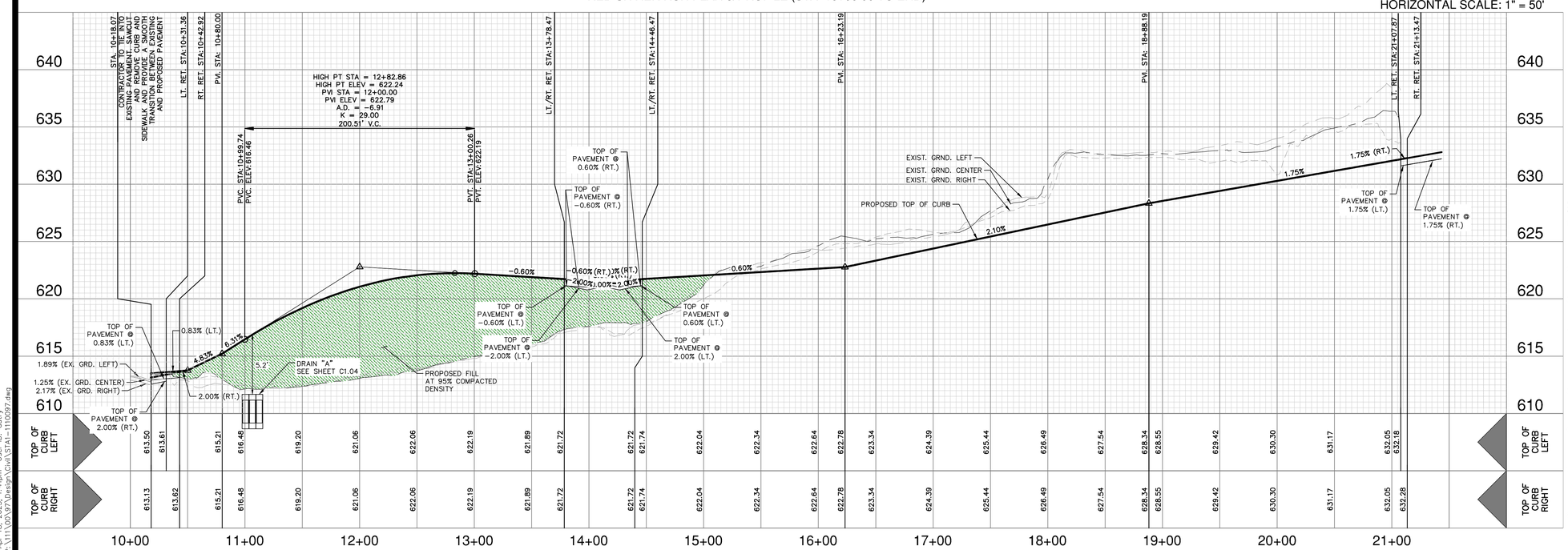

STREET NOTES:

1. A CITY OF SAN ANTONIO ROW PERMIT MUST BE OBTAINED BEFORE WORKING IN BEXAR COUNTY ROW. CONTRACTOR SHALL COORDINATE A TRAFFIC CONTROL PLAN FOR ALL WORK WITHIN THE ROW. ADDITIONAL WARNING SIGNS MAY BE RECOMMENDED BY THE ENGINEER ONCE THE ROADWAYS ARE CONSTRUCTED.
2. CONTRACTOR SHALL MATCH EXISTING PAVEMENT AT TIE-IN. IF EXISTING PAVEMENT ELEVATION DIFFERS SIGNIFICANTLY, CONTRACTOR SHALL NOTIFY THE ENGINEER PRIOR TO CONTINUING WORK.
3. SIDEWALKS SHALL BE CONSTRUCTED 3-FT FROM THE BACK OF CURB FOR ALL LOCATIONS WHERE THE SIDEWALK IS SHOWN OFFSET. REFER TO STREET DETAIL SHEET FOR SIDEWALK AND RAMP DETAILS.
4. NO PERMANENT STRUCTURES HIGHER THAN 3 FEET, AND LOWER THAN 8 FEET ABOVE THE PAVEMENT, INCLUDING STRUCTURES, WALLS, FENCES, AND VEGETATION, SHALL BE CONSTRUCTED OR ALLOWED WITHIN THE CLEAR VISION EASEMENT. CONTRACTOR SHALL GRADE AREAS WITHIN CLEAR VISION EASEMENTS SUCH THAT THE ELEVATION WITHIN THE CLEAR VISION EASEMENT IS NOT HIGHER THAN 3 FEET ABOVE THE ADJACENT TOP OF PAVEMENT.
5. DRIVEWAYS SHOWN ON THIS PLAN ARE FOR THE SOLE PURPOSE OF INDICATING A POTENTIAL CONFLICT WITH CURB RAMP, DRAINAGE INFRASTRUCTURE, OR OTHER CONFLICT. DRIVEWAY LOCATION IS SUBJECT TO CHANGE BASED ON HOME SELECTION AND FINAL LOT DESIGN.
6. CHANGES IN THE SIDEWALK LOCATION FOR A MAXIMUM LINEAR DISTANCE OF TWO HUNDRED (200) FEET ARE PERMITTED TO BE APPROVED BY THE FIELD INSPECTOR WITHOUT AMENDING THE STREET PLAN OR UTILITY LAYOUT PER UDC SECTION 35-506 (Q)(6).
7. THE CONSTRUCTION OF SIDEWALKS ADJACENT TO ALL 900 SERIES LOTS WILL BE THE RESPONSIBILITY OF THE DEVELOPER AS SHOWN ON THE OVERALL SIGNAGE PLAN SIDEWALKS ARE NOT SHOWN ADJACENT TO ALL PRIVATE STREETS. REFER TO SHEET C3.00 FOR LOCATIONS OF SIDEWALK CONSTRUCTION.
8. FILL MATERIAL SHOULD BE NATIVE ON-SITE MATERIAL, FREE OF DELETERIOUS MATERIAL WITH A MINIMUM CBR VALUE OF 2.5 AND A PI MAXIMUM OF 20. THE GRAVEL SIZE SHOULD NOT EXCEED 3 INCHES IN DIAMETER. LIME APPLICATION RATE SHOULD BE RE-EVALUATED FOR THE FILL MATERIAL. THE MATERIAL SHOULD BE PLACED AS PER APPLICABLE CITY OR COUNTY GUIDELINES.

NO.	REVISION	DATE

STATE OF TEXAS
JON D. ADAME
82567
LICENSED
PROFESSIONAL ENGINEER

Jon Adame
4-18-23

PAPE-DAWSON ENGINEERS
SAN ANTONIO I AUSTIN I HOUSTON I FORT WORTH I DALLAS
2000 NW LOOP 410 I SAN ANTONIO, TX 78213 I 210.375.9000
TEXAS ENGINEERING FIRM #470 I TEXAS SURVEYING FIRM #10028800

SMILEY TRACT UNIT 1

SAN ANTONIO, TEXAS

RED SHINER RUN PLAN & PROFILE (STA. 10+00.00 TO END)

PLAT NO.	22-11800482
JOB NO.	11100-97
DATE	APRIL 2023
DESIGNER	AA
CHECKED	VS DRAWN AA
SHEET	C2.00

Date: Apr 18, 2023, 1:41pm User ID: ostry
File: P:\111\00\97\Design\Civil\ST41-1110097.dwg

THIS DOCUMENT HAS BEEN PRODUCED FROM MATERIAL THAT WAS STORED AND/OR TRANSMITTED ELECTRONICALLY AND MAY HAVE BEEN INADVERTENTLY ALTERED. RELY ONLY ON FINAL HARDCOPY MATERIALS BEARING THE CONSULTANT'S ORIGINAL SIGNATURE AND SEAL. AERIAL IMAGERY PROVIDED BY GOOGLE© UNLESS OTHERWISE NOTED. Imagery © 2016,CAPCOG,Digital Globe,Texas Orthoimagery Program, USDA Farm Service Agency.

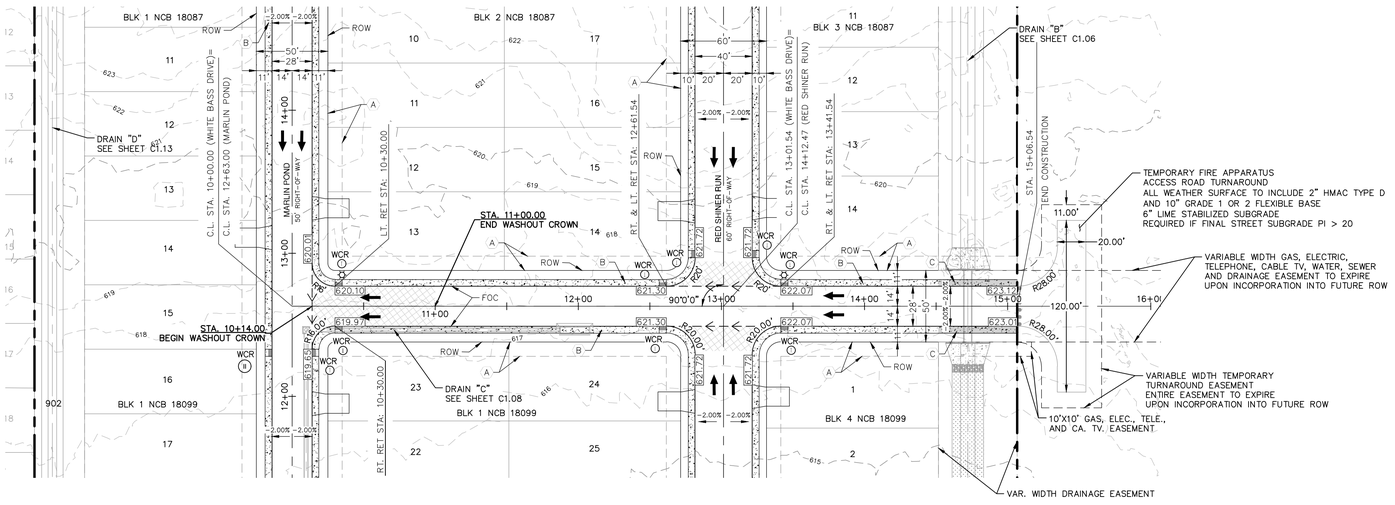

SCALE: 1"= 50'

0' 50' 100' 150'

STREET LEGEND

PROJECT LIMITS	
MAINTAIN GUTTER	
EXISTING CONTOUR	970
WHEELCHAIR RAMP	WCR
CENTERLINE	CL
RADIUS POINT	RP
POINT OF CURVATURE	PC
POINT OF TANGENCY	PT
RETURN	RET
DRAINAGE FLOW ARROW	
TOP OF CURB SPOT ELEVATION	857.30
PAVEMENT ELEVATION	857.00(P) ×
WASHOUT CROWN SECTION	
SIDEWALK (HOMEOWNER'S RESPONSIBILITY)	
SIDEWALK (DEVELOPER'S RESPONSIBILITY)	
DRIVEWAY	

KEY LEGEND:

- (A) 10' ELEC., GAS, TELE., & CA. T.V. EASEMENT
- (B) 4' SIDEWALK
- (C) 4' SIDEWALK (DEVELOPER RESPONSIBILITY)

WHITE BASS DRIVE PLAN & PROFILE (STA. 10+00.00 TO END)

VERTICAL SCALE: 1" = 5'
HORIZONTAL SCALE: 1" = 50'

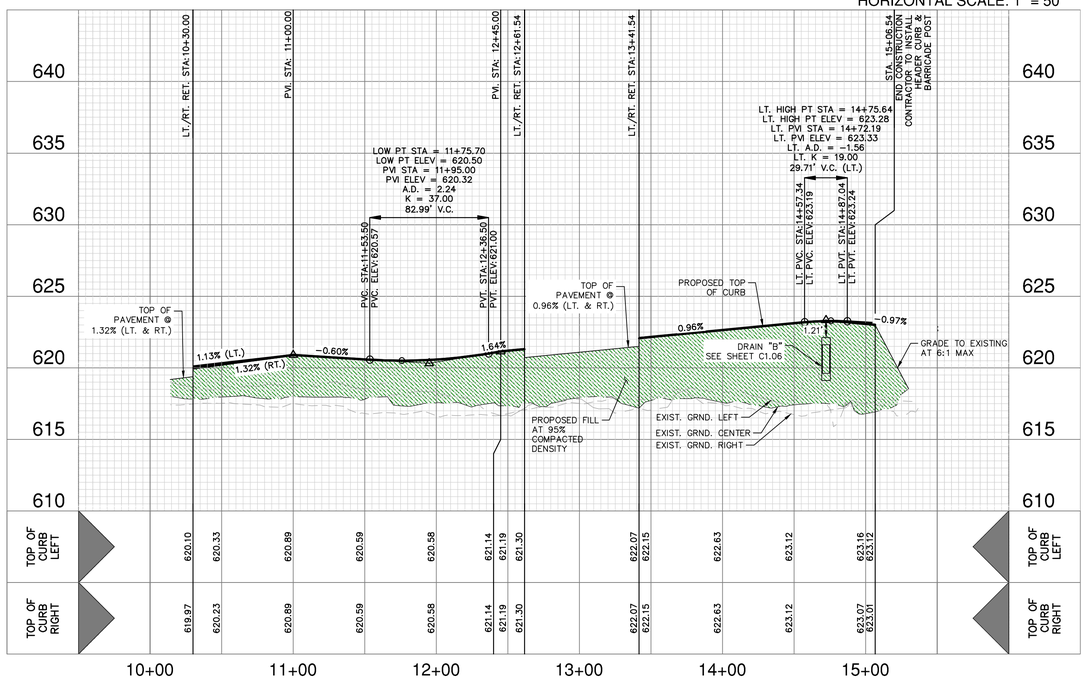

STREET NOTES:

1. A CITY OF SAN ANTONIO ROW PERMIT MUST BE OBTAINED BEFORE WORKING IN BEXAR COUNTY ROW. CONTRACTOR SHALL COORDINATE A TRAFFIC CONTROL PLAN FOR ALL WORK WITHIN THE ROW. ADDITIONAL WARNING SIGNS MAY BE RECOMMENDED BY THE ENGINEER ONCE THE ROADWAYS ARE CONSTRUCTED.
2. CONTRACTOR SHALL MATCH EXISTING PAVEMENT AT TIE-IN. IF EXISTING PAVEMENT ELEVATION DIFFERS SIGNIFICANTLY, CONTRACTOR SHALL NOTIFY THE ENGINEER PRIOR TO CONTINUING WORK.
3. SIDEWALKS SHALL BE CONSTRUCTED 3-FT FROM THE BACK OF CURB FOR ALL LOCATIONS WHERE THE SIDEWALK IS SHOWN OFFSET. REFER TO STREET DETAIL SHEET FOR SIDEWALK AND RAMP DETAILS.
4. NO PERMANENT STRUCTURES HIGHER THAN 3 FEET, AND LOWER THAN 8 FEET ABOVE THE PAVEMENT, INCLUDING STRUCTURES, WALLS, FENCES, AND VEGETATION, SHALL BE CONSTRUCTED OR ALLOWED WITHIN THE CLEAR VISION EASEMENT. CONTRACTOR SHALL GRADE AREAS WITHIN CLEAR VISION EASEMENTS SUCH THAT THE ELEVATION WITHIN THE CLEAR VISION EASEMENT IS NOT HIGHER THAN 3 FEET ABOVE THE ADJACENT TOP OF PAVEMENT.
5. DRIVEWAYS SHOWN ON THIS PLAN ARE FOR THE SOLE PURPOSE OF INDICATING A POTENTIAL CONFLICT WITH CURB RAMP, DRAINAGE INFRASTRUCTURE, OR OTHER CONFLICT. DRIVEWAY LOCATION IS SUBJECT TO CHANGE BASED ON HOME SELECTION AND FINAL LOT DESIGN.
6. CHANGES IN THE SIDEWALK LOCATION FOR A MAXIMUM LINEAR DISTANCE OF TWO HUNDRED (200) FEET ARE PERMITTED TO BE APPROVED BY THE FIELD INSPECTOR WITHOUT AMENDING THE STREET PLAN OR UTILITY LAYOUT PER UDC SECTION 35-506 (Q)(6).
7. THE CONSTRUCTION OF SIDEWALKS ADJACENT TO ALL 900 SERIES LOTS WILL BE THE RESPONSIBILITY OF THE DEVELOPER AS SHOWN ON THE OVERALL SIGNAGE PLAN SIDEWALKS ARE NOT SHOWN ADJACENT TO ALL PRIVATE STREETS. REFER TO SHEET C3.00 FOR LOCATIONS OF SIDEWALK CONSTRUCTION.
8. FILL MATERIAL SHOULD BE NATIVE ON-SITE MATERIAL, FREE OF DELETERIOUS MATERIAL WITH A MINIMUM CBR VALUE OF 2.5 AND A PI MAXIMUM OF 20. THE GRAVEL SIZE SHOULD NOT EXCEED 3 INCHES IN DIAMETER. LIME APPLICATION RATE SHOULD BE RE-EVALUATED FOR THE FILL MATERIAL. THE MATERIAL SHOULD BE PLACED AS PER APPLICABLE CITY OR COUNTY GUIDELINES.

NO.	REVISION	DATE

STATE OF TEXAS
JON D. ADAME
82567
LICENSED
PROFESSIONAL ENGINEER

Jon Adame
4-18-23

PAPE-DAWSON ENGINEERS
SAN ANTONIO I AUSTIN I HOUSTON I FORT WORTH I DALLAS
2000 NW LOOP 410 I SAN ANTONIO, TX 78213 I 210.375.9000
TEXAS ENGINEERING FIRM #470 I TEXAS SURVEYING FIRM #10028800

SMILEY TRACT UNIT 1

SAN ANTONIO, TEXAS

WHITE BASS DRIVE PLAN & PROFILE (STA. 10+00.00 TO END)

PLAT NO. 22-11800482
JOB NO. 11100-97
DATE APRIL 2023
DESIGNER AA
CHECKED VS DRAWN AA
SHEET C2.01

Date: Apr 18, 2023, 1:41pm User ID: oatry
File: P:\111\00\97\Design\Civil\STA1-110097.dwg

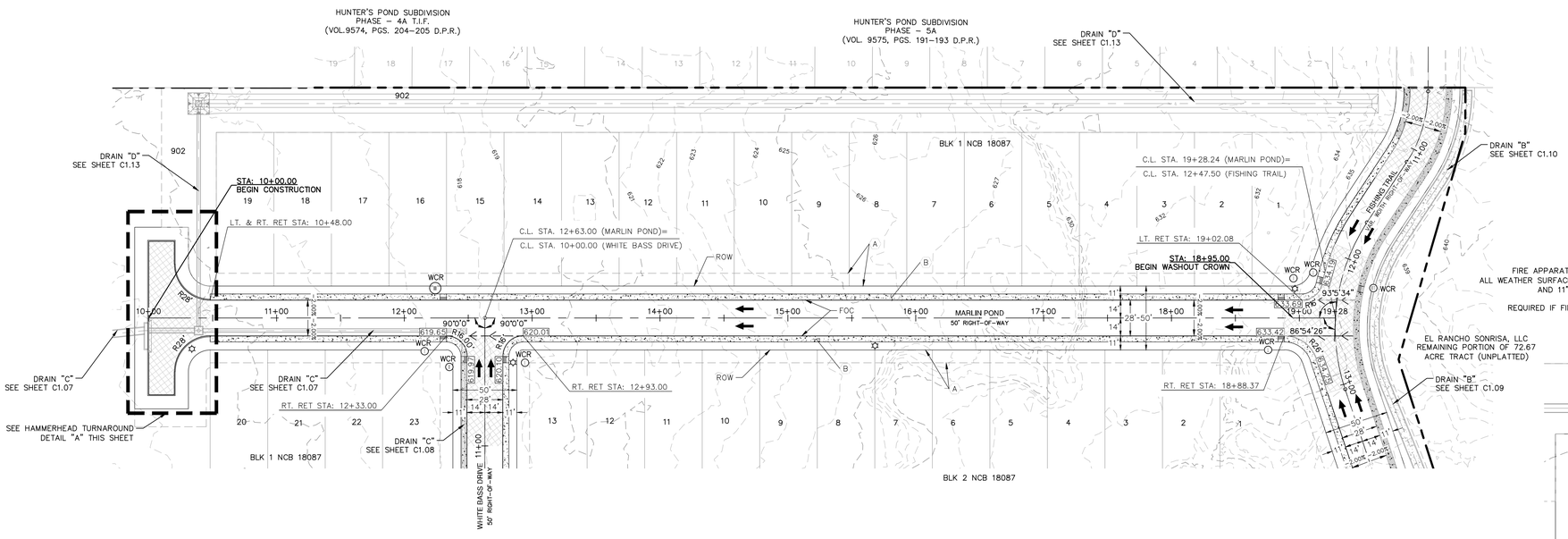

SCALE: 1"= 50'

0' 50' 100' 150'

STREET LEGEND

PROJECT LIMITS	
MAINTAIN GUTTER	
EXISTING CONTOUR	970
WHEELCHAIR RAMP	WCR
CENTERLINE	CL
RADIUS POINT	RP
POINT OF CURVATURE	PC
POINT OF TANGENCY	PT
RETURN	RET
DRAINAGE FLOW ARROW	
TOP OF CURB SPOT ELEVATION	857.30
PAVEMENT ELEVATION	857.00(P) ×
WASHOUT CROWN SECTION	
SIDEWALK (HOMEOWNER'S RESPONSIBILITY)	
SIDEWALK (DEVELOPER'S RESPONSIBILITY)	
DRIVEWAY	

KEY LEGEND:

- (A) 10' ELEC., GAS, TELE., & CA. T.V. EASEMENT
- (B) 4' SIDEWALK
- (C) 4' SIDEWALK (DEVELOPER RESPONSIBILITY)

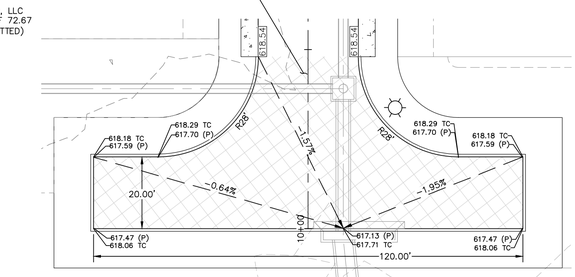

DETAIL "A"

SCALE: 1"=20'

MARLIN POND PLAN & PROFILE (STA. 10+00.00 TO END)

VERTICAL SCALE: 1" = 5'
HORIZONTAL SCALE: 1" = 50'

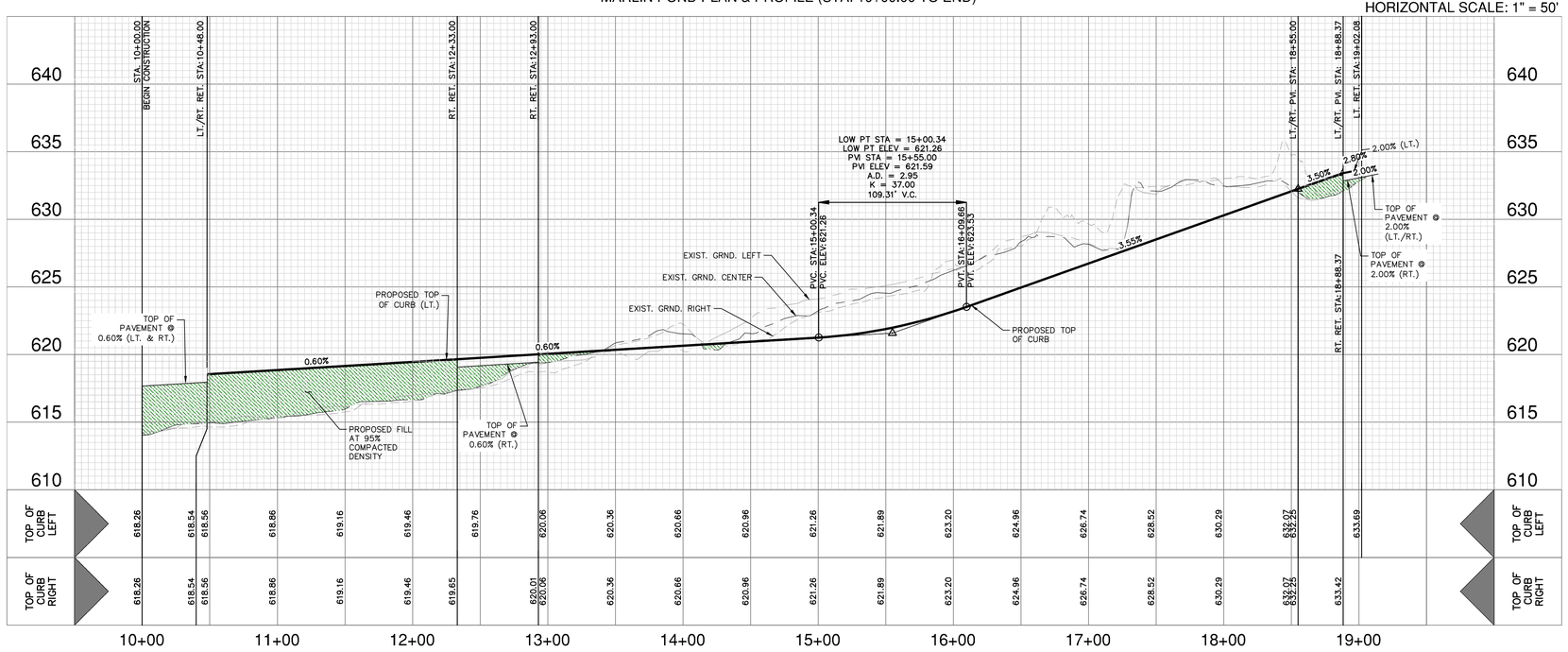

STREET NOTES:

1. A CITY OF SAN ANTONIO COUNTY ROW PERMIT MUST BE OBTAINED BEFORE WORKING IN BEXAR COUNTY ROW. CONTRACTOR SHALL COORDINATE A TRAFFIC CONTROL PLAN FOR ALL WORK WITHIN THE ROW. ADDITIONAL WARNING SIGNS MAY BE RECOMMENDED BY THE ENGINEER ONCE THE ROADWAYS ARE CONSTRUCTED.
2. CONTRACTOR SHALL MATCH EXISTING PAVEMENT AT TIE–IN. IF EXISTING PAVEMENT ELEVATION DIFFERS SIGNIFICANTLY, CONTRACTOR SHALL NOTIFY THE ENGINEER PRIOR TO CONTINUING WORK.
3. SIDEWALKS SHALL BE CONSTRUCTED 3–FT FROM THE BACK OF CURB FOR ALL LOCATIONS WHERE THE SIDEWALK IS SHOWN OFFSET. REFER TO STREET DETAIL SHEET FOR SIDEWALK AND RAMP DETAILS.
4. NO PERMANENT STRUCTURES HIGHER THAN 3 FEET, AND LOWER THAN 8 FEET ABOVE THE PAVEMENT, INCLUDING STRUCTURES, WALLS, FENCES, AND VEGETATION, SHALL BE CONSTRUCTED OR ALLOWED WITHIN THE CLEAR VISION EASEMENT. CONTRACTOR SHALL GRADE AREAS WITHIN CLEAR VISION EASEMENTS SUCH THAT THE ELEVATION WITHIN THE CLEAR VISION EASEMENT IS NOT HIGHER THAN 3 FEET ABOVE THE ADJACENT TOP OF PAVEMENT.
5. DRIVEWAYS SHOWN ON THIS PLAN ARE FOR THE SOLE PURPOSE OF INDICATING A POTENTIAL CONFLICT WITH CURB RAMP, DRAINAGE INFRASTRUCTURE, OR OTHER CONFLICT. DRIVEWAY LOCATION IS SUBJECT TO CHANGE BASED ON HOME SELECTION AND FINAL LOT DESIGN.
6. CHANGES IN THE SIDEWALK LOCATION FOR A MAXIMUM LINEAR DISTANCE OF TWO HUNDRED (200) FEET ARE PERMITTED TO BE APPROVED BY THE FIELD INSPECTOR WITHOUT AMENDING THE STREET PLAN OR UTILITY LAYOUT PER UDC SECTION 35–506 (Q)(6).
7. THE CONSTRUCTION OF SIDEWALKS ADJACENT TO ALL 900 SERIES LOTS WILL BE THE RESPONSIBILITY OF THE DEVELOPER AS SHOWN ON THE OVERALL SIGNAGE PLAN SIDEWALKS ARE NOT SHOWN ADJACENT TO ALL PRIVATE STREETS. REFER TO SHEET C3.00 FOR LOCATIONS OF SIDEWALK CONSTRUCTION.
8. FILL MATERIAL SHOULD BE NATIVE ON–SITE MATERIAL, FREE OF DELETERIOUS MATERIAL WITH A MINIMUM CBR VALUE OF 2.5 AND A PI MAXIMUM OF 20. THE GRAVEL SIZE SHOULD NOT EXCEED 3 INCHES IN DIAMETER. LIME APPLICATION RATE SHOULD BE RE–EVALUATED FOR THE FILL MATERIAL. THE MATERIAL SHOULD BE PLACED AS PER APPLICABLE CITY OR COUNTY GUIDELINES.

NO.	REVISION	DATE

STATE OF TEXAS
JON D. ADAME
82567
LICENSED
PROFESSIONAL ENGINEER
4-20-23

PAPE-DAWSON ENGINEERS
SAN ANTONIO I AUSTIN I HOUSTON I FORT WORTH I DALLAS
2000 NW LOOP 410 I SAN ANTONIO, TX 78213 I 210.375.9000
TEXAS ENGINEERING FIRM #470 I TEXAS SURVEYING FIRM #10028800

SMILEY TRACT UNIT 1

SAN ANTONIO, TEXAS

MARLIN POND PLAN & PROFILE (STA. 10+00.00 TO END)

PLAT NO. 22-11800482
JOB NO. 11100–97
DATE APRIL 2023
DESIGNER AA
CHECKED VS DRAWN AA
SHEET C2.02

Date: Apr 20, 2023, 1:58pm User ID: oatry
File: P:\111\00\97\Design\Civil\STA1-1110097.dwg

THIS DOCUMENT HAS BEEN PRODUCED FROM MATERIAL THAT WAS STORED AND/OR TRANSMITTED ELECTRONICALLY AND MAY HAVE BEEN INADVERTENTLY ALTERED. RELY ONLY ON FINAL HARDCOPY MATERIALS BEARING THE CONSULTANT'S ORIGINAL SIGNATURE AND SEAL. AERIAL IMAGERY PROVIDED BY GOOGLE© UNLESS OTHERWISE NOTED. Imagery © 2016,CAPCOG,Digital Globe,Texas Orthoimagery Program, USDA Farm Service Agency.

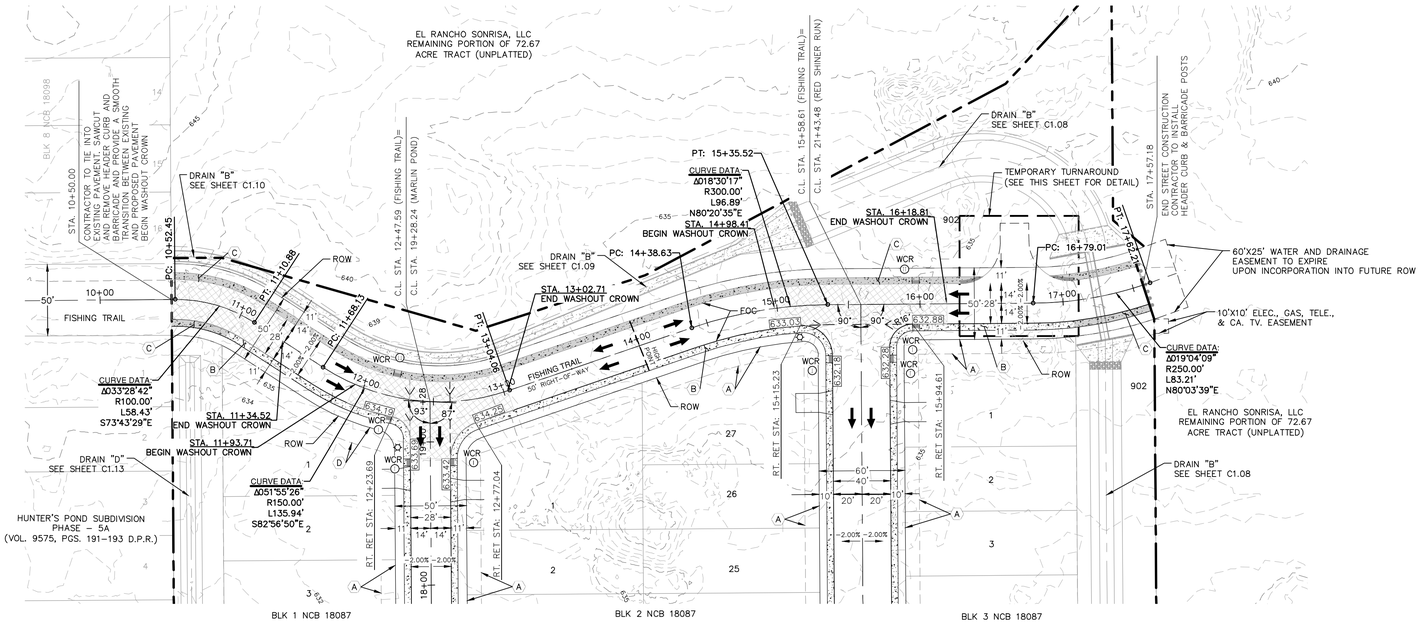

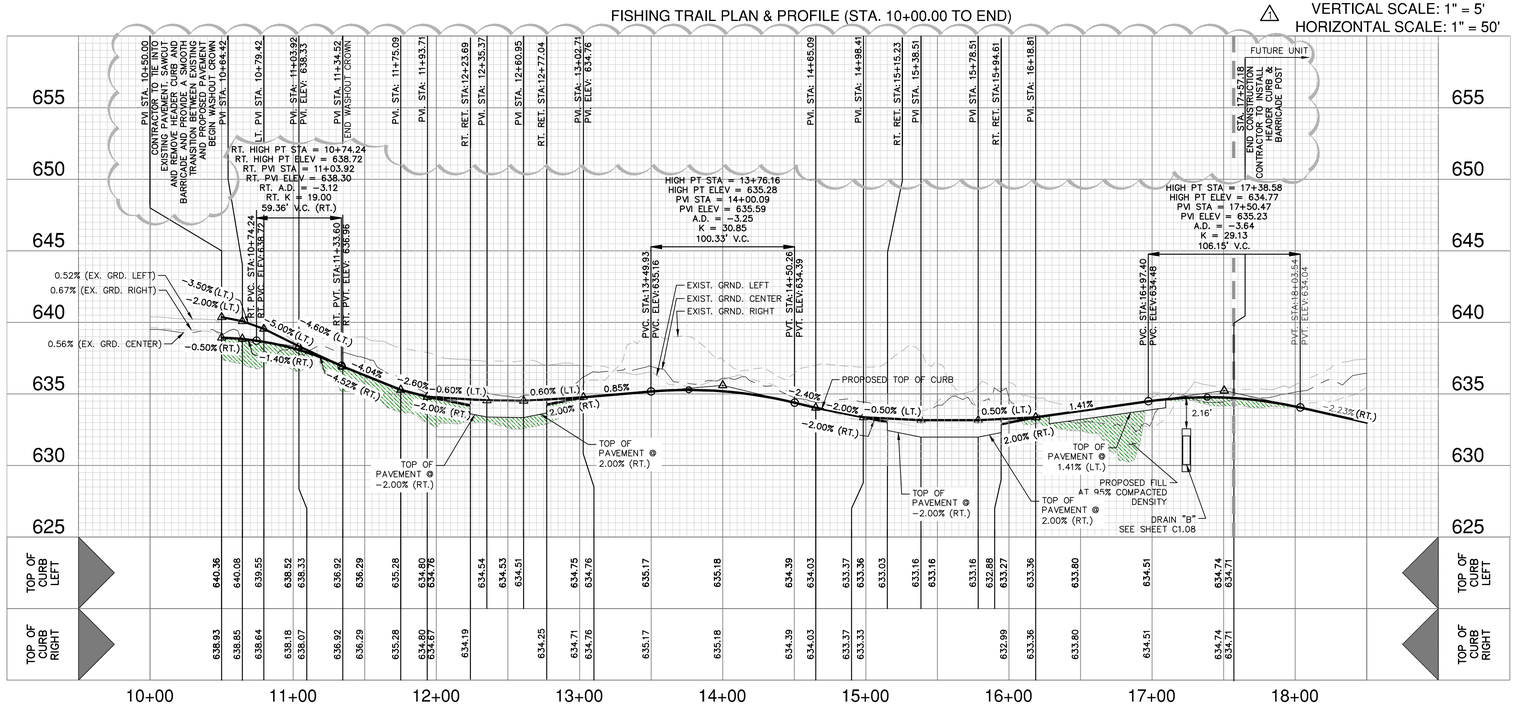

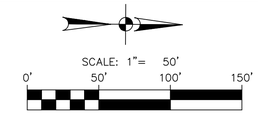

STREET LEGEND

PROJECT LIMITS	
MAINTAIN GUTTER	
EXISTING CONTOUR	970
WHEELCHAIR RAMP	WCR
CENTERLINE	CL
RADIUS POINT	RP
POINT OF CURVATURE	PC
POINT OF TANGENCY	PT
RETURN	RET
DRAINAGE FLOW ARROW	
TOP OF CURB SPOT ELEVATION	857.30
PAVEMENT ELEVATION	857.00(P) ×
WASHOUT CROWN SECTION	
SIDEWALK (HOMEOWNER'S RESPONSIBILITY)	
SIDEWALK (DEVELOPER'S RESPONSIBILITY)	
DRIVEWAY	

KEY LEGEND:

- (A) 10' ELEC., GAS, TELE., & CA. T.V. EASEMENT
- (B) 4' SIDEWALK
- (C) 4' SIDEWALK (DEVELOPER RESPONSIBILITY)
- (D) 14' ELEC., GAS, TELE., & CA. T.V. EASEMENT

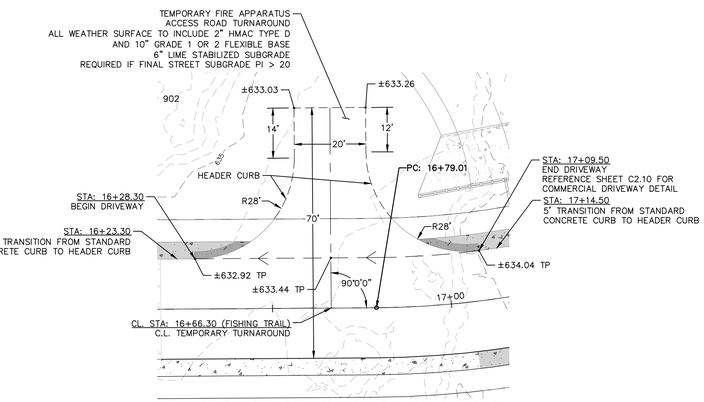

TEMPORARY TURNAROUND DETAIL

SCALE: 1"= 20'

*NOTE: TEMPORARY TURNAROUND IS NOT NEEDED IF UNITS 1 & 2 ARE BUILT CONCURRENTLY. CONTINUE SIDEWALK IF BUILT CONCURRENTLY.

STREET NOTES:

1. A CITY OF SAN ANTONIO ROW PERMIT MUST BE OBTAINED BEFORE WORKING IN BEXAR COUNTY ROW. CONTRACTOR SHALL COORDINATE A TRAFFIC CONTROL PLAN FOR ALL WORK WITHIN THE ROW. ADDITIONAL WARNING SIGNS MAY BE RECOMMENDED BY THE ENGINEER ONCE THE ROADWAYS ARE CONSTRUCTED.
2. CONTRACTOR SHALL MATCH EXISTING PAVEMENT AT TIE–IN. IF EXISTING PAVEMENT ELEVATION DIFFERS SIGNIFICANTLY, CONTRACTOR SHALL NOTIFY THE ENGINEER PRIOR TO CONTINUING WORK.
3. SIDEWALKS SHALL BE CONSTRUCTED 3–FT FROM THE BACK OF CURB FOR ALL LOCATIONS WHERE THE SIDEWALK IS SHOWN OFFSET. REFER TO STREET DETAIL SHEET FOR SIDEWALK AND RAMP DETAILS.
4. NO PERMANENT STRUCTURES HIGHER THAN 3 FEET, AND LOWER THAN 8 FEET ABOVE THE PAVEMENT, INCLUDING STRUCTURES, WALLS, FENCES, AND VEGETATION, SHALL BE CONSTRUCTED OR ALLOWED WITHIN THE CLEAR VISION EASEMENT. CONTRACTOR SHALL GRADE AREAS WITHIN CLEAR VISION EASEMENTS SUCH THAT THE ELEVATION WITHIN THE CLEAR VISION EASEMENT IS NOT HIGHER THAN 3 FEET ABOVE THE ADJACENT TOP OF PAVEMENT.
5. DRIVEWAYS SHOWN ON THIS PLAN ARE FOR THE SOLE PURPOSE OF INDICATING A POTENTIAL CONFLICT WITH CURB RAMP, DRAINAGE INFRASTRUCTURE, OR OTHER CONFLICT. DRIVEWAY LOCATION IS SUBJECT TO CHANGE BASED ON HOME SELECTION AND FINAL LOT DESIGN.
6. CHANGES IN THE SIDEWALK LOCATION FOR A MAXIMUM LINEAR DISTANCE OF TWO HUNDRED (200) FEET ARE PERMITTED TO BE APPROVED BY THE FIELD INSPECTOR WITHOUT AMENDING THE STREET PLAN OR UTILITY LAYOUT PER UDC SECTION 35–506 (Q)(6).
7. THE CONSTRUCTION OF SIDEWALKS ADJACENT TO ALL 900 SERIES LOTS WILL BE THE RESPONSIBILITY OF THE DEVELOPER AS SHOWN ON THE OVERALL SIGNAGE PLAN SIDEWALKS ARE NOT SHOWN ADJACENT TO ALL PRIVATE STREETS. REFER TO SHEET C3.00 FOR LOCATIONS OF SIDEWALK CONSTRUCTION.
8. FILL MATERIAL SHOULD BE NATIVE ON–SITE MATERIAL, FREE OF DELETERIOUS MATERIAL WITH A MINIMUM CBR VALUE OF 2.5 AND A PI MAXIMUM OF 20. THE GRAVEL SIZE SHOULD NOT EXCEED 3 INCHES IN DIAMETER. LIME APPLICATION RATE SHOULD BE RE–EVALUATED FOR THE FILL MATERIAL. THE MATERIAL SHOULD BE PLACED AS PER APPLICABLE CITY OR COUNTY GUIDELINES.

NO.	REVISION	DATE
1	CONCURRENT CONSTRUCTION NOTE	01/16/24
	UPDATED STATION NUMBERS	

STATE OF TEXAS
JON D. ADAME
82567
LICENSED
PROFESSIONAL ENGINEER

Jon Adame
1-16-24

PAPE-DAWSON ENGINEERS
SAN ANTONIO I AUSTIN I HOUSTON I FORT WORTH I DALLAS
2000 NW LOOP 410 I SAN ANTONIO, TX 78213 I 210.375.9000
TEXAS ENGINEERING FIRM #470 I TEXAS SURVEYING FIRM #10028800

SMILEY TRACT UNIT 1

SAN ANTONIO, TEXAS

FISHING TRAIL PLAN & PROFILE (STA. 10+00.00 TO END)

PLAT NO.	22-11800482
JOB NO.	11100–97
DATE	AUGUST 2023
DESIGNER	AA
CHECKED	VS
DRAWN	AA
SHEET	C2.03

Date: Jan 16, 2024, 4:28pm User ID: ostry
File: P:\111\00\97\Design\Civil\ST1-1110097.dwg

THIS DOCUMENT HAS BEEN PRODUCED FROM MATERIAL THAT WAS STORED AND/OR TRANSMITTED ELECTRONICALLY AND MAY HAVE BEEN INADVERTENTLY ALTERED. RELY ONLY ON FINAL HARDCOPY MATERIALS BEARING THE CONSULTANT'S ORIGINAL SIGNATURE AND SEAL. AERIAL IMAGERY PROVIDED BY GOOGLE© UNLESS OTHERWISE NOTED. Imagery © 2016,CAPCOG,Digital Globe,Texas Orthoimagery Program, USDA Farm Service Agency.

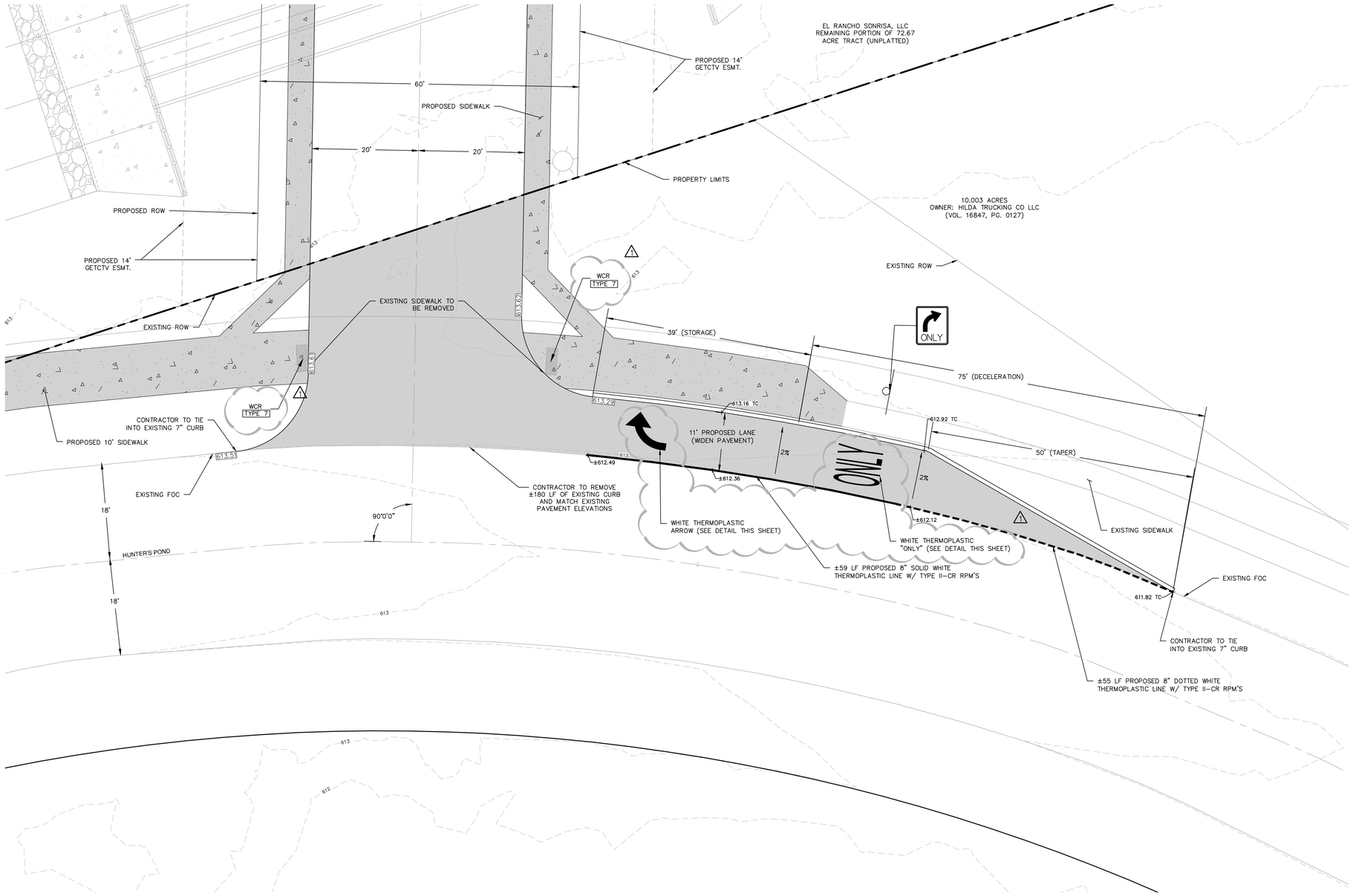

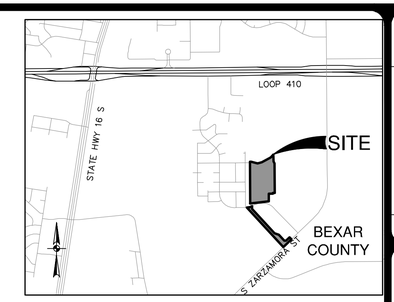

LOCATION MAP

NOT-TO-SCALE

SCALE: 1"= 10'

0' 10' 20' 30'

STRIPING LEGEND

NOTE: ALL PAVEMENT MARKINGS SHALL BE THERMOPLASTIC PER COSA ITEM #535

PROPOSED PAVEMENT TO BE 2" TYPE "D" HMAC AND MATCH EXISTING BASE THICKNESS

LIGHT POLE

TRAFFIC SIGN

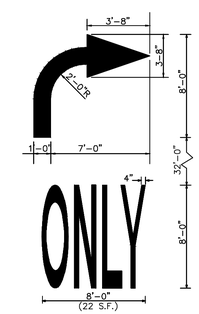

RIGHT TURN ONLY

N.T.S.

NO.	REVISION	DATE
1	UPDATED STRIPING AND RAMP TYPE	01/16/24

STATE OF TEXAS
JON D. ADAME
82567
LICENSED
PROFESSIONAL ENGINEER

Jon Adame
1-16-24

PAPE-DAWSON ENGINEERS

SAN ANTONIO I AUSTIN I HOUSTON I FORT WORTH I DALLAS
2000 NW LOOP 410 I SAN ANTONIO, TX 78213 I 210.375.9000
TEXAS ENGINEERING FIRM #470 I TEXAS SURVEYING FIRM #10028800

SMILEY TRACT UNIT 1

SAN ANTONIO, TEXAS

HUNTER'S POND TURN LANE PLAN

PLAT NO. 22-11800482
JOB NO. 11100-97
DATE AUGUST 2023
DESIGNER AA
CHECKED VS DRAWN AA
SHEET C2.04

Date: Jan 16, 2024, 4:44pm User ID: oatry
File: P:\111\00\97\Design\Civil\Turn Lane\SP-1110097.dwg

THIS DOCUMENT HAS BEEN PRODUCED FROM MATERIAL THAT WAS STORED AND/OR TRANSMITTED ELECTRONICALLY AND MAY HAVE BEEN INADVERTENTLY ALTERED. RELY ONLY ON FINAL HARDCOPY MATERIALS BEARING THE CONSULTANT'S ORIGINAL SIGNATURE AND SEAL. AERIAL IMAGERY PROVIDED BY GOOGLE© UNLESS OTHERWISE NOTED. Imagery © 2016,CAPCOG,Digital Globe,Texas Orthoimagery Program, USDA Farm Service Agency.

PAVEMENT SECTION DETAIL

STREET NAME	STATION	TYPE "D" HMAC	TYPE "C" HMAC	CRUSHED LIMESTONE BASE	STABILIZED SUBGRADE	GEOGRID (TENSAR TRIAX TX5)	CBR	STRUCTURAL NUMBER
RED SHINER RUN	1+00.00 TO END	2"	2"	18"	6*	NO	4.0	4.28
WHITE BASS DRIVE	1+00.00 TO END	2"	–	11"	6*	NO	4.0	2.42
MARLIN POND	1+00.00 TO END	2"	–	11"	6*	NO	4.0	2.42
FISHING TRAIL	1+00.00 TO END	2"	–	11"	6*	NO	4.0	2.42

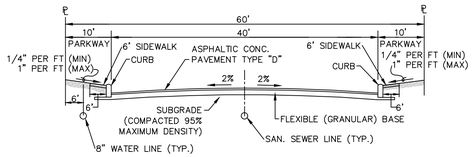

60' (LOCAL TYPE "B") ROW STREET SECTION

NOT–TO–SCALE

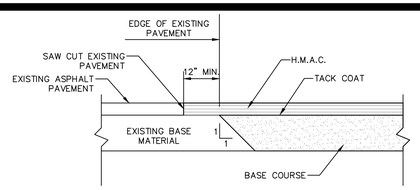

ASPHALT/ASPHALT JUNCTURE DETAIL

NOT–TO–SCALE

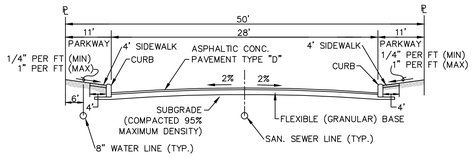

50' (LOCAL TYPE "A") ROW STREET SECTION

NOT–TO–SCALE

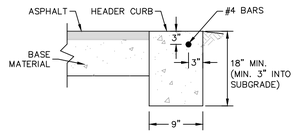

HEADER CURB DETAIL

NOT–TO–SCALE

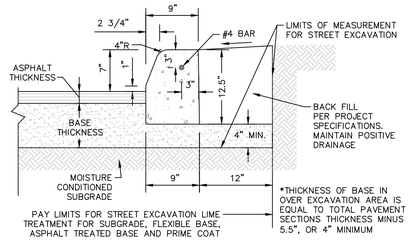

CONCRETE CURB DETAIL

NOT–TO–SCALE

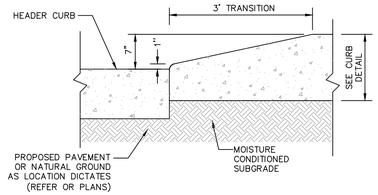

CURB TRANSITION DETAIL (FROM HEADER CURB TO STANDARD CURB)

NOT–TO–SCALE

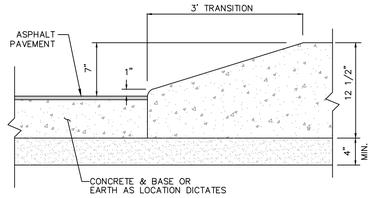

CURB TRANSITION DETAIL (FROM PAVEMENT TO STANDARD CURB)

NOT–TO–SCALE

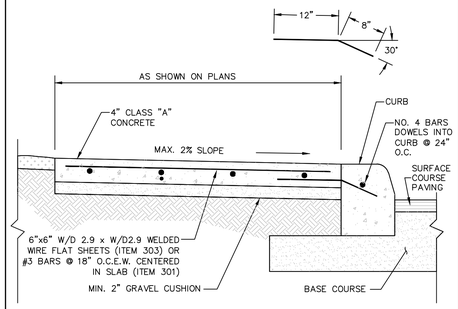

SIDEWALK DETAIL

NOT–TO–SCALE

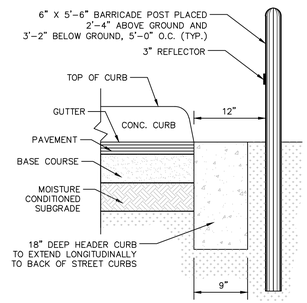

HEADER CURB & BARRICADE POST DETAIL

NOT–TO–SCALE

GENERAL NOTES:

1. CONTRACTOR SHALL REFERENCE THE PROJECT PAVEMENT DESIGN REPORT PREPARED BY **ROCK ENGINEERING** DATED **AUGUST 24, 2022**.
2. CONTRACTOR SHALL RETAIN A GEOTECHNICAL ENGINEER TO VERIFY THE SUB GRADE CONDITION PRIOR TO PLACING ANY BASE MATERIAL. GEOTECHNICAL ENGINEER SHALL DETERMINE THE SUB GRADE CONDITION AND IF LIME STABILIZATION IS REQUIRED.
3. GEOTECHNICAL ENGINEER SHOULD VERIFY THE STREET SUBGRADE AT THE TIME OF CONSTRUCTION PRIOR TO PLACEMENT OF AGGREGATE BASE.
4. THE FLEXIBLE BASE COURSE SHOULD BE CRUSHED LIMESTONE CONFORMING TO TXDOT STANDARD SPECIFICATIONS, ITEM 247, TYPE A, GRADES 1 OR 2.
5. THE MOISTURE CONTENT OF THE FILL SHOULD BE MAINTAINED WITHIN THE RANGE OF OPTIMUM WATER CONTENT TO 3 PERCENTAGE POINTS ABOVE THE OPTIMUM WATER CONTENT UNTIL PERMANENTLY COVERED.
6. IN THE EVENT THAT THE CLAY FILL USED IS DIFFERENT THAN THE EXISTING SUBGRADE, THE RECOMMENDATIONS IN THE GEOTECHNICAL REPORT COULD BE INVALIDATED AND THE DESIGN ENGINEER MUST BE CONSULTED TO DETERMINE IF ADDITIONAL CBR TESTING AND THICKER PAVEMENT SECTIONS ARE REQUIRED.
7. WHERE PAVEMENT SUBGRADE IS LOCATED WITHIN 2–FEET OF THE EXISTING GROUND SURFACE (STRATUM 1 CLAYS), MOISTURE CONDITIONED SUBGRADE WILL BE REQUIRED. GEOTECHNICAL ENGINEER SHOULD VERIFY THE STREET SUBGRADE AT THE TIME OF CONSTRUCTION PRIOR TO PLACEMENT OF AGGREGATE BASE TO DETERMINE WHERE THE MOISTURE CONDITIONED SUBGRADE IS NEEDED. REFERENCE GEOTECHNICAL ENGINEERING REPORT FOR MORE INFORMATION.
8. THE CONTRACTOR IS RESPONSIBLE FOR COORDINATING ALL MATERIAL TESTING WITH THE PROJECT GEOTECHNICAL ENGINEER. TESTING SHALL BE PAID FOR BY THE OWNER.
9. FILL MATERIAL HOULD BE NATIVE ON–SITE MATERIAL, FREE OF DELETERIOUS MATERIAL WITH A MINIMUM CBR VALUE OF 4 AND A PI WITHIN RANGE OF 5 AND 20. THE GRAVEL SIZE SHOULD NOT EXCEED 3 INCHES IN DIAMETER. LIME OR CEMENT APPLICATION RATES SHOULD BE RE–EVALUATED FOR THE FILL MATERIAL. THE MATERIAL SHOULD BE PLACED AS PER APPLICABLE CITY OR COUNTY GUIDELINES. CONTRACTOR TO VERIFY EXACT SPECIFICATIONS WITH PROJECT GEOTECHNICAL ENGINEERING REPORT.
10. A CITY OF SAN ANTONIO PERMIT MUST BE OBTAINED BEFORE WORKING IN THE CITY OF SAN ANTONIO ROW. CONTRACTOR SHALL COORDINATE A TRAFFIC CONTROL PLAN FOR ALL WORK WITHIN THE ROW. ADDITIONAL WARNING SIGNS MAY BE RECOMMENDED BY THE ENGINEER ONCE THE ROADWAYS ARE CONSTRUCTED.

STREET SUBGRADE NOTES:

1. IF THE STREET SUBGRADE PLASTICITY INDEX VALUE IS GREATER THAN 20, SUBGRADE STABILIZATION IS NEEDED AS PER CITY OF SAN ANTONIO REQUIREMENTS.
2. IF THE SUBGRADE PLASTICITY INDEX VALUE IS 20 OR LESS. SUBGRADE STABILIZATION IS NOT NEEDED. THE SUBGRADE SHOULD BE MOISTURE CONDITIONED (COMPACTED TO A MINIMUM OF 95 PERCENT OF THE MAXIMUM DRY DENSITY AT A MINIMUM MOISTURE CONTENT OF OPTIMUM PLUS 2 PERCENT (TEX114E)).
3. THE SUBGRADE SHOULD BE STABILIZED USING 5 PERCENT LIME TO A DEPTH OF 6 INCHES AS NOTED ABOVE.
4. THE SUBGRADE SOILS SHOULD BE TESTED FOR SOIL SULFATE CONTENT PRIOR TO STABILIZATION. IF THE SOIL SULFATE CONTENT IS HIGH, AN ALTERNATE PROCEDURE / RECOMMENDATION WILL BE NEEDED.
5. LIME APPLICATION RATE OF 27.0 LBS PER SQ YARD FOR 6 INCH DEPTH OF STABILIZATION IS RECOMMENDED.
6. APPROVED FILL MATERIAL SHOULD BE USED TO RAISE THE GRADE. THE FILL SHOULD BE FREE OF DELETERIOUS MATERIAL WITH A MINIMUM CBR VALUE OF 2.5. LIME APPLICATION RATES SHOULD BE RE–EVALUATED AND TESTED FOR SULFATE CONTENT PRIOR TO USE OF THE FILL MATERIAL. THE MATERIAL SHOULD BE PLACED AS PER APPLICABLE CITY OR COUNTY GUIDELINES.
7. THE SUBGRADE SHOULD BE PROOF ROLLED TO IDENTIFY SOFT AREAS BEFORE STABILIZATION.

LIME NOTES:

FOR LIME STABILIZATION CONSTRUCTION VERIFICATION THE FOLLOWING SHALL BE CONDUCTED ON THE FIELD:

1. AFTER INITIAL MIXING THE SOIL–LIME MIXTURE SHALL MELLOW FOR A PERIOD OF TWO TO THREE (2–3) DAYS. MAINTAIN MOISTURE DURING MELLOWING.
2. AFTER MELLOWING AND FINAL MIXING, THE PULVERIZATION SHALL BE CHECKED USING THE FOLLOWING CRITERIA (REMOVE NON–SLAKING AGGREGATES RETAINED ON THE ¾ INCH SIEVE FROM THE SAMPLE):
   - MINIMUM PASSING 1½" SIEVE 100
   - MINIMUM PASSING ¾" SIEVE 85
   - MINIMUM PASSING NO. 4 SIEVE 60
3. SAMPLE SOIL–LIME MIXTURE FOR DETERMINATION OF MAXIMUM DRY DENSITY (MDD). IN THE LABORATORY, MOLD SPECIMENS TO 95% OF MDD AT OPTIMUM MOISTURE CONTENT AND VERIFY UCS TO BE AT LEAST 160 PSI IN ACCORDANCE WITH PROCEDURE OUTLINED IN THE BEXAR COUNTY FLEXIBLE PAVEMENT DESIGN CRITERIA GUIDE FOR MIXTURE DESIGN.
4. COMPACT AND CHECK FIELD DENSITY (MINIMUM OF 95% OF MDD REQUIRED).
5. CURE FOR AN ADDITIONAL 2 TO 5 DAYS (TOTAL MELLOWING AND CURING TIME SHOULD TOTAL AT LEAST 5 DAYS).
6. VERIFY DEPTH OF LIME STABILIZED LAYER TO DEPTH AS NOTED ON PLAN TO WITHIN +/– 1.0 INCH.

NO.	REVISION	DATE

STATE OF TEXAS
JON D. ADAME
82567
LICENSED
PROFESSIONAL ENGINEER
4-18-23

PAPE-DAWSON ENGINEERS
SAN ANTONIO I AUSTIN I HOUSTON I FORT WORTH I DALLAS
2000 NW LOOP 410 I SAN ANTONIO, TX 78213 I 210.375.9000
TEXAS ENGINEERING FIRM #470 I TEXAS SURVEYING FIRM #10028800

SMILEY TRACT UNIT 1
SAN ANTONIO, TEXAS

STREET DETAILS

PLAT NO. 22-11800482
JOB NO. 11100–97
DATE APRIL 2023
DESIGNER AA
CHECKED VS DRAWN AA
SHEET C2.10

Date: Apr 18, 2023, 1:42pm User ID: ostry
File: P:\111\00\97\Design\Civil\STDT–1110097.dwg

THIS DOCUMENT HAS BEEN PRODUCED FROM MATERIAL THAT WAS STORED AND/OR TRANSMITTED ELECTRONICALLY AND MAY HAVE BEEN INADVERTENTLY ALTERED. RELY ONLY ON FINAL HARDCOPY MATERIALS BEARING THE CONSULTANT'S ORIGINAL SIGNATURE AND SEAL. AERIAL IMAGERY PROVIDED BY GOOGLE© UNLESS OTHERWISE NOTED. Imagery © 2016,CAPCOG,Digital Globe,Texas Orthoimagery Program, USDA Farm Service Agency.

DISCLAIMER:
This standard is governed by the "Texas Engineering Practice Act". No warranty of any kind is made by TxDOT for any purpose whatsoever. TxDOT assumes no responsibility for the conversion of this standard to other formats or for incorrect results or damages resulting from its use.

TYPE 1

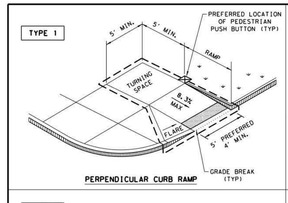

PERPENDICULAR CURB RAMP

TYPE 2

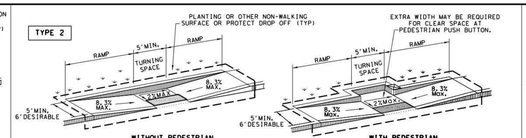

WITHOUT PEDESTRIAN PUSH BUTTON

WITH PEDESTRIAN PUSH BUTTON

PARALLEL CURB RAMP

TYPE 3

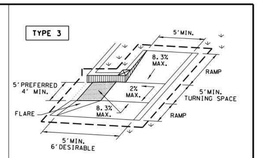

TYPE 6

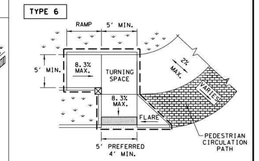

COMBINATION CURB RAMPS

TYPE 20

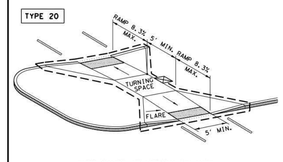

CURB RAMPS AT MEDIAN ISLANDS

TYPE 21

INSTALL DETECTABLE WARNING SURFACE AT EACH END OF THE CUT-THROUGH RAMP WITH A MINIMUM 2' USUAL SIDEWALK SURFACE BETWEEN. IF MEDIAN IS LESS THAN 6' WIDE, ELIMINATE DETECTABLE WARNING SURFACES.

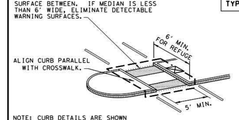

NOTE: CURB DETAILS ARE SHOWN ELSEWHERE IN THE PLANS.

TYPE 7
(SIDEWALK SET BACK FROM CURB)

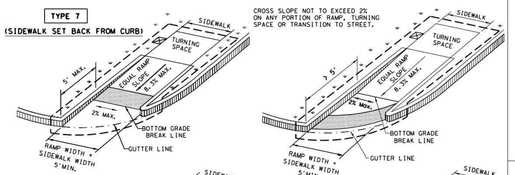

TYPE 10
(SIDEWALK ADJACENT TO CURB)

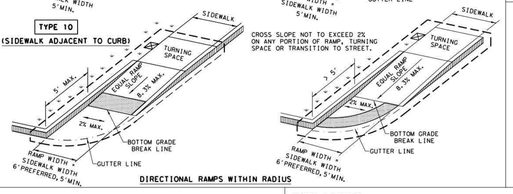

DIRECTIONAL RAMPS WITHIN RADIUS

TYPE 5

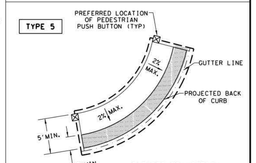

BLENDED TRANSITION
(FLUSH LANDING)

TYPE 22

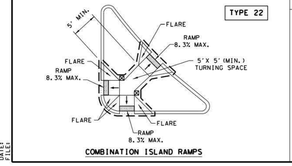

COMBINATION ISLAND RAMPS

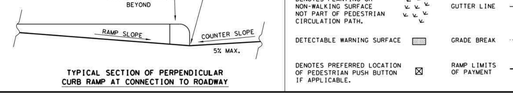

TYPICAL SECTION OF PERPENDICULAR CURB RAMP AT CONNECTION TO ROADWAY

NOTES / LEGEND:

SEE GENERAL NOTES ON SHEET 2 OF 4 FOR MORE INFORMATION.

DENOTES PLANTING OR NON-WALKING SURFACE NOT PART OF PEDESTRIAN CIRCULATION PATH.

DETECTABLE WARNING SURFACE

DENOTES PREFERRED LOCATION OF PEDESTRIAN PUSH BUTTON IF APPLICABLE.

GUTTER LINE

GRADE BREAK

RAMP LIMITS OF PAYMENT

SHEET 1 OF 4

Texas Department of Transportation — Design Division Standard

PEDESTRIAN FACILITIES
CURB RAMPS

PED-18

FILE: ped18	DN: TxDOT	CK: VP	CK: KM	CK: PK & JG
©TxDOT: MARCH, 2002	CONT	SECT	JOB	HIGHWAY
REVISIONS: REVISED 08-2003, REVISED 06-2012, REVISED 01-2014	DIST		COUNTY	SHEET NO.

DATE:
FILE:

GENERAL NOTES

CURB RAMPS

1. Install a curb ramp or blended transition at each pedestrian street crossing.
2. All slopes shown are maximum allowable. Cross slopes of 1.5% and lesser running should be used. Adjust curb ramp length or grade of approach sidewalks as directed.
3. Maximum allowable cross slope on sidewalk and curb ramp surfaces is 2%.
4. The minimum sidewalk width is 5'. Where the sidewalk is adjacent to the back of curb, a 6' sidewalk width is desirable. Where a 5' sidewalk cannot be provided due to site constraints, sidewalk width may be reduced to 4' for short distances. 5'x 5' passing areas at intervals not to exceed 200' are required.
5. Turning Spaces shall be 5'x 5' minimum. Cross slope shall be maximum 2%.
6. Clear space at the bottom of curb ramps shall be a minimum of 4'x 4' wholly contained within the crosswalk and wholly outside the parallel vehicular travel path.
7. Provide flared sides where the pedestrian circulation path crosses the curb ramp. Flared sides shall be sloped at 10% maximum, measured parallel to the curb. Returned curbs may be used only where pedestrians would not normally walk across the ramp, either because the adjacent surface is planted, substantially obstructed, or otherwise protected.
8. Additional information on curb ramp location, design, light reflective value and texture may be found in the latest draft of the Proposed Guidelines for Pedestrian Facilities in the Public Right of Way (PROWAG) as published by the U.S. Architectural and Transportation Barriers Compliance Board (Access Board).
9. To serve as a pedestrian refuge area, the median should be a minimum of 6' wide, measured from back of curbs. Medians should be designed to provide accessible passage over or through them.
10. Small channelization islands, which do not provide a minimum 5'x 5' landing at the top of curb ramps, shall be cut through level with the surface of the street.
11. Crosswalk dimensions, crosswalk markings and stop bar locations shall be as shown elsewhere in the plans. At intersections where crosswalk markings are not required, curb ramps shall align with theoretical crosswalks unless otherwise directed.
12. Provide curb ramps to connect the pedestrian access route at each pedestrian street crossing. Handrails are not required on curb ramps.
13. Curb ramps and landings shall be constructed and paid for in accordance with Item 531 "Sidewalks".
14. Place concrete at a minimum depth of 5" for ramps, flares and landings, unless otherwise directed.
15. Furnish and install No. 3 reinforcing steel bars at 18" o.c. both ways, unless otherwise directed.
16. Provide a smooth transition where the curb ramps connect to the street.
17. Curbs shown on sheet 1 within the limits of payment are considered part of the curb ramp for payment, whether it is concrete curb, gutter, or combined curb and gutter.
18. Existing features that comply with applicable standards may remain in place unless otherwise shown on the plans.

DETECTABLE WARNING MATERIAL

19. Curb ramps must contain a detectable warning surface that consists of raised truncated domes complying with PROWAG. The surface must contrast visually with adjoining surfaces, including side flares. Furnish and install an approved cast-in-place dark brown or dark red detectable warning surface material adjacent to uncolored concrete, unless specified elsewhere in the plans.
20. Detectable Warning Materials must meet TxDOT Departmental Materials Specification DMS 4350 and be listed on the Material Producer List. Install products in accordance with manufacturer's specifications.
21. Detectable warning surfaces must be firm, stable and slip resistant.
22. Detectable warning surfaces shall be a minimum of 24 inches in depth in the direction of pedestrian travel, and extend the full width of the curb ramp or landing where the pedestrian access route enters the street.
23. Detectable warning surfaces shall be located so that the edge nearest the curb line is at the back of curb and neither end of that edge is greater than 5 feet from the back of curb. Detectable warning surfaces may be curved along the corner radius.
24. Shaded areas on Sheet 1 of 4 indicate the approximate location for the detectable warning surface for each curb ramp type.

DETECTABLE WARNING PAVERS (IF USED)

25. Furnish detectable warning paver units meeting all requirements of ASTM C-936, C-33. Lay in a two by two unit basket weave pattern or as directed.
26. Lay full-size units first followed by closure units consisting of at least 25 percent (25%) of a full unit. Cut detectable warning paver units using a power saw.

SIDEWALKS

27. Provide clear ground space at operable parts, including pedestrian push buttons. Operable parts shall be placed within unobstructed reach range specified in PROWAG section R406.
28. Place traffic signal or illumination poles, ground boxes, controller boxes, signs, drainage facilities and other items so as not to obstruct the pedestrian access route or clear ground space.
29. Street grades and cross slopes shall be as shown elsewhere in the plans.
30. Changes in level greater than 1/4 inch are not permitted.
31. The least possible grade should be used to maximize accessibility. The running slope of sidewalks and crosswalks within the public right of way may follow the grade of the parallel roadway. Where a continuous grade greater than five percent (5%) must be provided, handrails may be desirable to improve accessibility. Handrails may also be needed to protect pedestrians from potentially hazardous conditions. If provided, handrails shall comply with PROWAG R409.
32. Handrail extensions shall not protrude into the usable landing area or into intersecting pedestrian routes.
33. Driveways and turnouts shall be constructed and paid for in accordance with Item "Intersections, Driveways and Turnouts". Sidewalks shall be constructed and paid for in accordance with Item, "Sidewalks".
34. Sidewalk details are shown elsewhere in the plans.

DETECTABLE WARNING SURFACE DETAILS

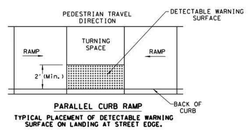

PARALLEL CURB RAMP

TYPICAL PLACEMENT OF DETECTABLE WARNING SURFACE ON LANDING AT STREET EDGE.

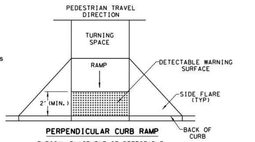

PERPENDICULAR CURB RAMP

TYPICAL PLACEMENT OF DETECTABLE WARNING SURFACE ON SLOPING RAMP RUN.

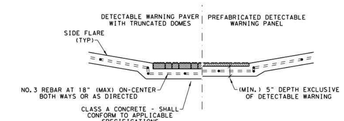

SECTION VIEW DETAIL
CURB RAMP AT DETECTIBLE WARNINGS

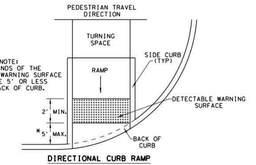

*NOTE:
BOTH ENDS OF THE DETECTABLE WARNING SURFACE SHALL BE 5' OR LESS FROM BACK OF CURB.

DIRECTIONAL CURB RAMP

TYPICAL PLACEMENT OF DETECTABLE WARNING SURFACE ON SLOPING RAMP RUN.

SHEET 2 OF 4

Texas Department of Transportation — Design Division Standard

PEDESTRIAN FACILITIES
CURB RAMPS

PED-18

FILE: ped18	DN: TxDOT	CK: VP	CK: KM	CK: PK & JG
©TxDOT: MARCH, 2002	CONT	SECT	JOB	HIGHWAY
REVISIONS: REVISED 08-2003, REVISED 06-2012, REVISED 01-2014	DIST		COUNTY	SHEET NO.

DATE:
FILE:

SIDEWALK TREATMENT AT DRIVEWAYS

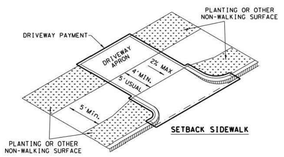

SETBACK SIDEWALK

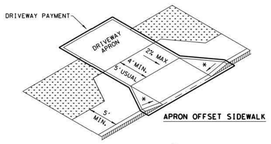

APRON OFFSET SIDEWALK

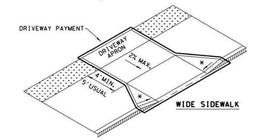

WIDE SIDEWALK

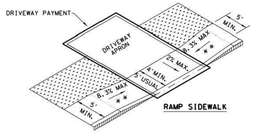

RAMP SIDEWALK

NOTES:
* WHERE DRIVEWAYS CROSS THE PEDESTRIAN ROUTE, SIDES SHALL BE FLARED AT 10% MAX SLOPE.
* * IF CURB HEIGHT IS GREATER THAN 6 INCHES, USE GRADE LESS THAN OR EQUAL TO 5%. HANDRAIL AND DETECTABLE WARNING ARE NOT REQUIRED.

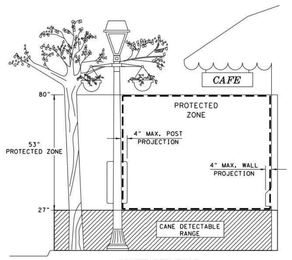

PROTECTED ZONE

NOTE: IN PEDESTRIAN CIRCULATION AREA, MAXIMUM 4" PROJECTION FOR POST OR WALL MOUNTED OBJECTS BETWEEN 27" AND 80" ABOVE THE SURFACE.

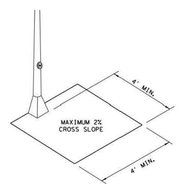

CLEAR SPACE ADJACENT TO PEDESTRIAN PUSH BUTTON

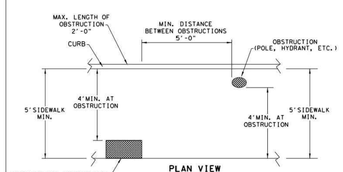

PLAN VIEW

PLACEMENT OF STREET FIXTURES

NOTE: ITEMS NOT INTENDED FOR PUBLIC USE. MINIMUM 4' X 4' CLEAR GROUND SPACE REQUIRED AT PUBLIC USE FIXTURES.

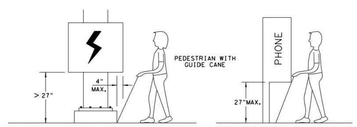

WHEN AN OBSTRUCTION OF A HEIGHT GREATER THAN 27" FROM THE SURFACE WOULD CREATE A PROTRUSION OF MORE THAN 4" INTO THE PEDESTRIAN CIRCULATION AREA, CONSTRUCT ADDITIONAL CURB OR FOUNDATION AT THE BOTTOM TO PROVIDE A MAXIMUM 4" OVERHANG.

PROTRUDING OBJECTS OF A HEIGHT ≤27" ARE DETECTABLE BY CANE AND DO NOT REQUIRE ADDITIONAL TREATMENT.

DETECTION BARRIER FOR VERTICAL CLEARANCE < 80"

SHEET 3 OF 4

Texas Department of Transportation — Design Division Standard

PEDESTRIAN FACILITIES
CURB RAMPS

PED-18

FILE: ped18	DN: TxDOT	CK: VP	CK: KM	CK: PK & JG
©TxDOT: MARCH, 2002	CONT	SECT	JOB	HIGHWAY
REVISIONS: REVISED 08-2003, REVISED 06-2012, REVISED 01-2014	DIST		COUNTY	SHEET NO.

DATE:
FILE:

TYPICAL CROSSING LAYOUTS

SEE SHEET 1 OF 4 FOR DETAILS AND DIMENSIONS

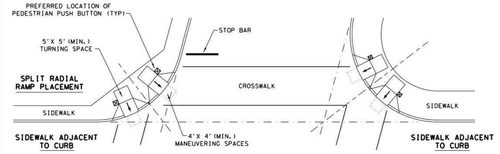

SKEWED INTERSECTION WITH "LARGE" RADIUS

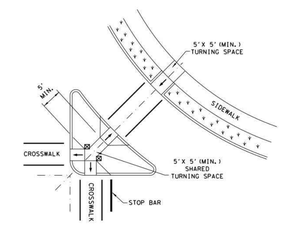

AT INTERSECTION
W/FREE RIGHT TURN & ISLAND

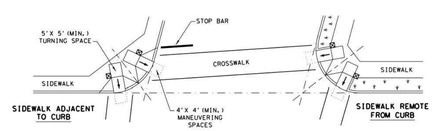

SKEWED INTERSECTION WITH "SMALL" RADIUS

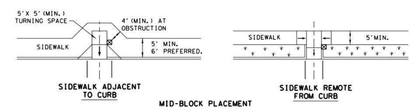

MID-BLOCK PLACEMENT
PERPENDICULAR RAMPS

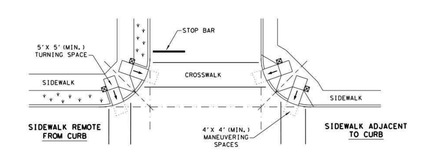

NORMAL INTERSECTION WITH "SMALL" RADIUS

LEGEND:

SHOWS DOWNWARD SLOPE.

DENOTES PREFERRED LOCATION OF PEDESTRIAN PUSH BUTTON (IF APPLICABLE).

DENOTES PLANTING OR NON-WALKING SURFACE NOT PART OF PEDESTRIAN CIRCULATION PATH.

SHEET 4 OF 4

Texas Department of Transportation — Design Division Standard

PEDESTRIAN FACILITIES
CURB RAMPS

PED-18

FILE: ped18	DN: TxDOT	CK: VP	CK: KM	CK: PK & JG
©TxDOT: MARCH, 2002	CONT	SECT	JOB	HIGHWAY
REVISIONS: REVISED 08-2003, REVISED 06-2012, REVISED 01-2014	DIST		COUNTY	SHEET NO.

NO.	REVISION	DATE

STATE OF TEXAS
JON D. ADAME
82567
LICENSED PROFESSIONAL ENGINEER
4-18-23

PAPE-DAWSON ENGINEERS
SAN ANTONIO I AUSTIN I HOUSTON I FORT WORTH I DALLAS
2000 NW LOOP 410 I SAN ANTONIO, TX 78213 I 210.375.9000
TEXAS ENGINEERING FIRM #470 I TEXAS SURVEYING FIRM #10028800

SMILEY TRACT UNIT 1
SAN ANTONIO, TEXAS
STREET DETAILS

PLAT NO. 22-11800482
JOB NO. 11100-97
DATE APRIL 2023
DESIGNER AA
CHECKED VS DRAWN AA
SHEET C2.11

Date: Apr 18, 2023, 1:42pm User ID: ostry
File: P:\111\00\97\Design\Civil\STD7-1110097.dwg

THIS DOCUMENT HAS BEEN PRODUCED FROM MATERIAL THAT WAS STORED AND/OR TRANSMITTED ELECTRONICALLY AND MAY HAVE BEEN INADVERTENTLY ALTERED. RELY ONLY ON FINAL HARDCOPY MATERIALS BEARING THE CONSULTANT'S ORIGINAL SIGNATURE AND SEAL. AERIAL IMAGERY PROVIDED BY GOOGLE© UNLESS OTHERWISE NOTED. Imagery © 2016,CAPCOG,Digital Globe,Texas Orthoimagery Program, USDA Farm Service Agency.

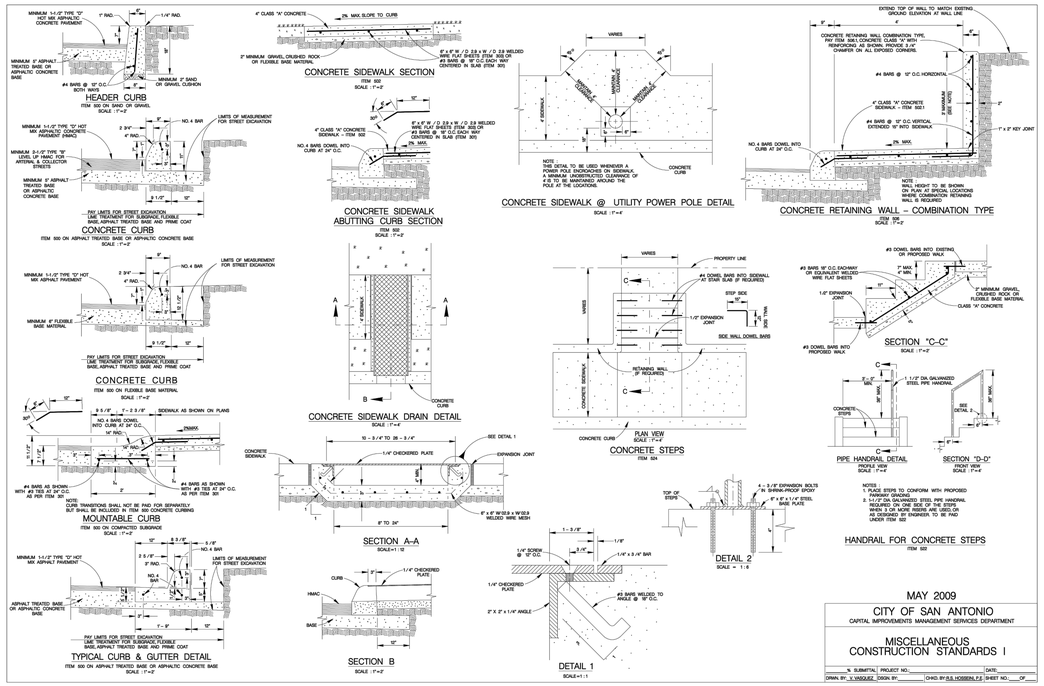

MAY 2009

CITY OF SAN ANTONIO
CAPITAL IMPROVEMENTS MANAGEMENT SERVICES DEPARTMENT

MISCELLANEOUS CONSTRUCTION STANDARDS I

% SUBMITTAL PROJECT NO.:_____ DATE:_____
DRWN BY: V. VASQUEZ DSGN BY:_____ CHKD BY: R.G. HOSSERA P.E. SHEET NO.:___OF___

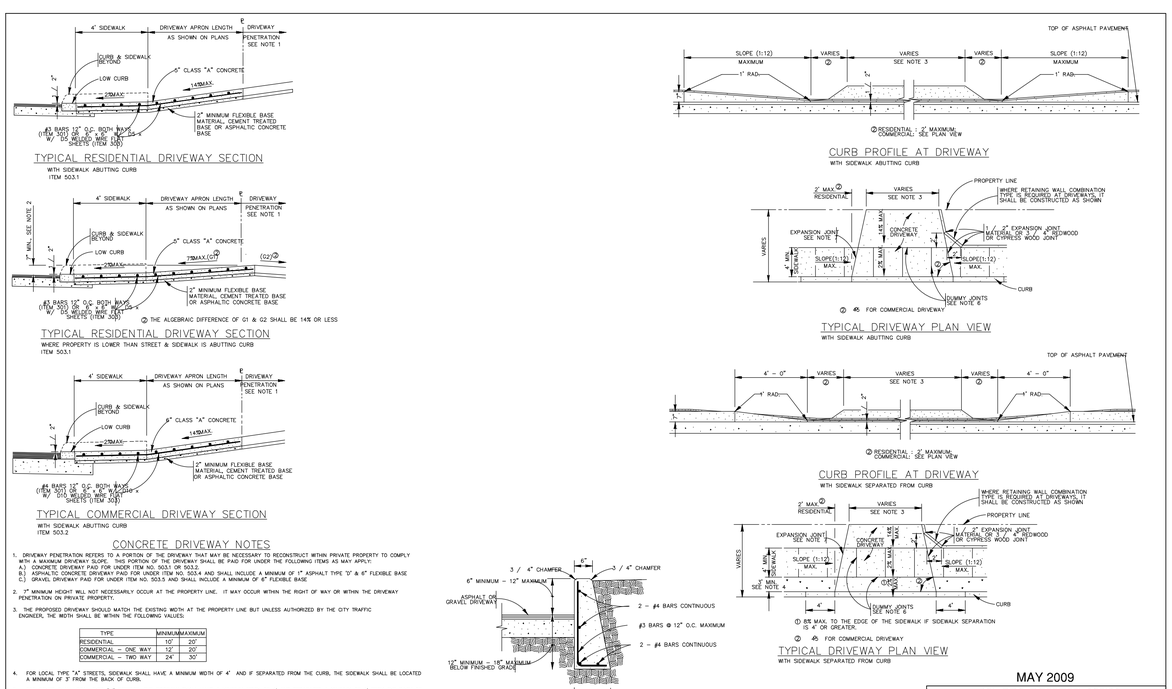

CONCRETE DRIVEWAY NOTES

1. DRIVEWAY PENETRATION REFERS TO A PORTION OF THE DRIVEWAY THAT MAY BE NECESSARY TO RECONSTRUCT WITHIN PRIVATE PROPERTY TO COMPLY WITH A MAXIMUM DRIVEWAY SLOPE. THIS PORTION OF THE DRIVEWAY SHALL BE PAID FOR UNDER THE FOLLOWING ITEMS AS MAY APPLY:
   A.) CONCRETE DRIVEWAY PAID FOR UNDER ITEM NO. 503.1 OR 503.2.
   B.) ASPHALTIC CONCRETE DRIVEWAY PAID FOR UNDER ITEM NO. 503.4 AND SHALL INCLUDE A MINIMUM OF 1" ASPHALT TYPE 'D' & 6" FLEXIBLE BASE
   C.) GRAVEL DRIVEWAY PAID FOR UNDER ITEM NO. 503.5 AND SHALL INCLUDE A MINIMUM OF 6" FLEXIBLE BASE
2. 1" MINIMUM HEIGHT WILL NOT NECESSARILY OCCUR AT THE PROPERTY LINE. IT MAY OCCUR WITHIN THE RIGHT OF WAY OR WITHIN THE DRIVEWAY PENETRATION ON PRIVATE PROPERTY.
3. THE PROPOSED DRIVEWAY SHOULD MATCH THE EXISTING WIDTH AT THE PROPERTY LINE BUT UNLESS AUTHORIZED BY THE CITY TRAFFIC ENGINEER, THE WIDTH SHALL BE WITHIN THE FOLLOWING TABLE:

TYPE	MINIMUM	MAXIMUM
RESIDENTIAL	10'	20'
COMMERCIAL - ONE WAY	12'	20'
COMMERCIAL - TWO WAY	24'	30'

4. FOR LOCAL TYPE "A" STREETS, SIDEWALK SHALL HAVE A MINIMUM WIDTH OF 4' AND IF SEPARATED FROM THE CURB, THE SIDEWALK SHALL BE LOCATED A MINIMUM OF 3' FROM THE BACK OF CURB.
5. FOR OTHER THAN LOCAL TYPE "A" STREETS, THE SIDEWALK SHALL HAVE A MINIMUM WIDTH OF 4' AND SEPARATED A MINIMUM OF 3' FROM THE BACK OF CURB OR, AS AN OPTION, THE SIDEWALK SHALL HAVE A MINIMUM WIDTH OF 6' WHEN LOCATED AT THE BACK OF CURB.
6. DUMMY JOINTS PARALLEL TO THE CURB SHALL BE PLACED WHERE THE SIDEWALK MEETS THE DRIVEWAY. DUMMY JOINTS PERPENDICULAR TO THE CURB, AND WITHIN THE BOUNDARIES OF THE PARALLEL DUMMY JOINTS, SHALL BE PLACED AT INTERVALS EQUAL TO THE WIDTH OF THE SIDEWALK.
7. A MINIMUM OF TWO ROUND AND SMOOTH DOWEL BARS 3 /8" IN DIAMETER AND 18" IN LENGTH SHALL BE SPACED 18" APART AT EACH EXPANSION JOINT.
8. SIDEWALK RAMP LENGTHS SHALL BE OF SUFFICIENT LENGTH TO MAINTAIN 8.33% (1:12) MAXIMUM SLOPE. WHERE SIDEWALKS CROSS DRIVEWAYS, SIDEWALK CROSS SLOPE SHALL NOT EXCEED 2%.
9. SIDEWALK RAMP SURFACE SHALL BE BRUSH FINISHED.

NOTE:
1. COST OF REINFORCEMENT TO BE INCLUDED IN UNIT COST OF ITEM 307.1.
2. CONCRETE RETAINING WALL COMBINATION TYPE SHALL BE USED FOR CONCRETE DRIVEWAYS.

MAY 2009

CITY OF SAN ANTONIO
CAPITAL IMPROVEMENTS MANAGEMENT SERVICES DEPARTMENT

CONCRETE DRIVEWAY STANDARDS

% SUBMITTAL PROJECT NO.:_____ DATE:_____
DRWN BY: V. VASQUEZ DSGN BY:_____ CHKD BY: R.G. HOSSERA P.E. SHEET NO.:___OF___

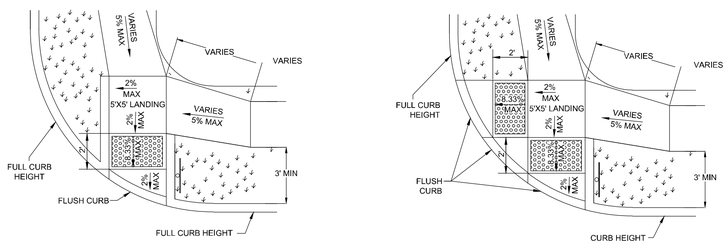

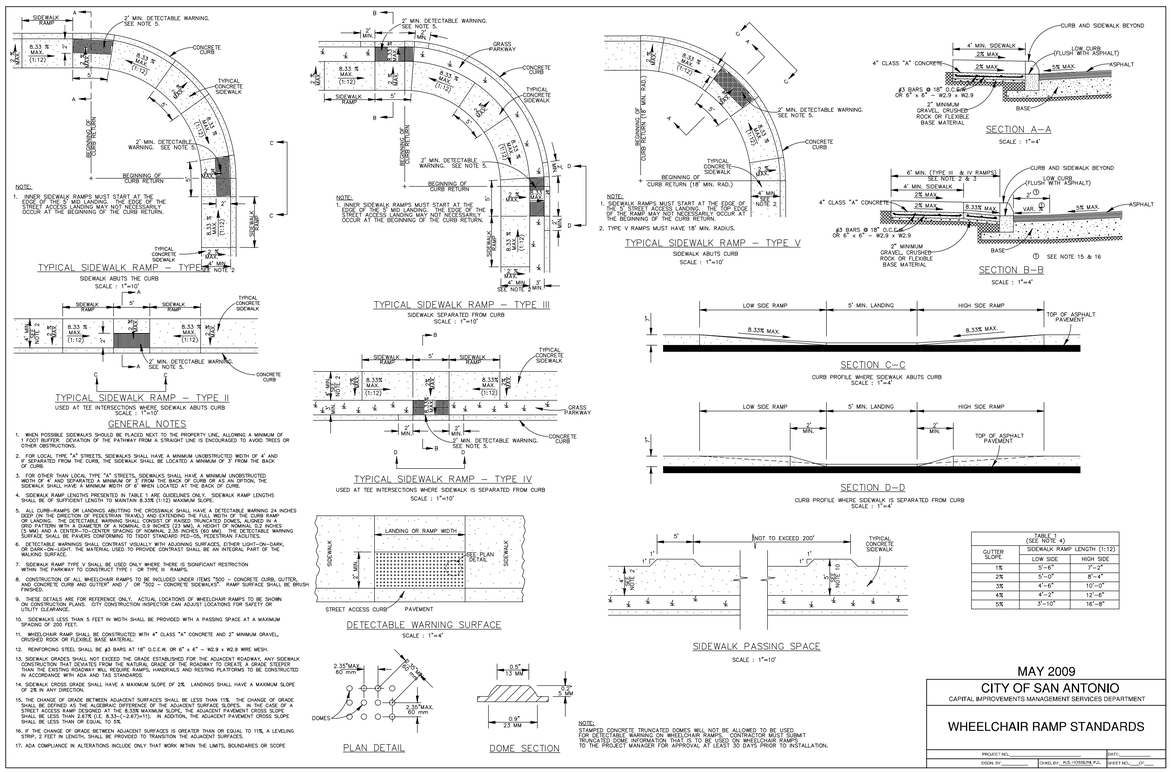

TABLE 1 (SEE NOTE 4)		
GUTTER SLOPE	SIDEWALK RAMP LENGTH (1:12)	
	LOW SIDE	HIGH SIDE
1%	5'-6"	7'-2"
2%	5'-0"	8'-4"
3%	4'-6"	10'-0"
4%	4'-2"	12'-6"
5%	3'-10"	16'-8"

MAY 2009

CITY OF SAN ANTONIO
CAPITAL IMPROVEMENTS MANAGEMENT SERVICES DEPARTMENT

WHEELCHAIR RAMP STANDARDS

PROJECT NO.:_____ DATE:_____
DSGN BY:_____ CHKD BY: R.G. HOSSERA P.E. SHEET NO.:___OF___

NO.	REVISION	DATE

JON D. ADAME
82567
LICENSED
PROFESSIONAL ENGINEER
STATE OF TEXAS
4-18-23

PAPE-DAWSON ENGINEERS
SAN ANTONIO I AUSTIN I HOUSTON I FORT WORTH I DALLAS
2000 NW LOOP 410 I SAN ANTONIO, TX 78213 I 210.375.9000
TEXAS ENGINEERING FIRM #470 I TEXAS SURVEYING FIRM #10028800

SMILEY TRACT UNIT 1
SAN ANTONIO, TEXAS

STREET DETAILS

PLAT NO. 22-11800482
JOB NO. 11100-97
DATE APRIL 2023
DESIGNER AA
CHECKED VS DRAWN AA
SHEET C2.12

Date: Apr 18, 2023, 1:43pm User ID: oatry
File: P:\11\00\97\Design\Civil\STD1-1110097.dwg

THIS DOCUMENT HAS BEEN PRODUCED FROM MATERIAL THAT WAS STORED AND/OR TRANSMITTED ELECTRONICALLY AND MAY HAVE BEEN INADVERTENTLY ALTERED. RELY ONLY ON FINAL HARDCOPY MATERIALS BEARING THE CONSULTANT'S ORIGINAL SIGNATURE AND SEAL. AERIAL IMAGERY PROVIDED BY GOOGLE© UNLESS OTHERWISE NOTED. Imagery © 2016,CAPCOG,Digital Globe,Texas Orthoimagery Program, USDA Farm Service Agency.

SYMBOL		ITEM NUMBER
	UNIT BOUNDARY	
	CURB INLET	
	PROPOSED DRIVEWAY	
	TRAFFIC FLOW ARROW	
	SIDEWALK (HOMEBUILDER RESPONSIBILITY)	
	SIDEWALK (SITEWORK CONTRACTOR RESPONSIBILITY)	
Street Name	STREET SIGN	531.57
STOP	R1-1 30"X30"	531.3
	END OF ROAD MARKER OM4-3	
	HEADER CURB W/ BARRICADE POSTS	

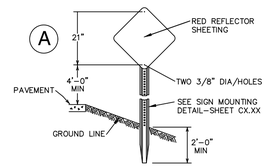

UNITS MOUNTED ON 0.080" THICK SHEET ALUMINUM CONFORMING WITH ASTM B-209 ALLOY 6061-T6.

TYPE 4 OM4-3
18" x 18"

OBJECT MARKER TYPE 4

NOT-TO-SCALE

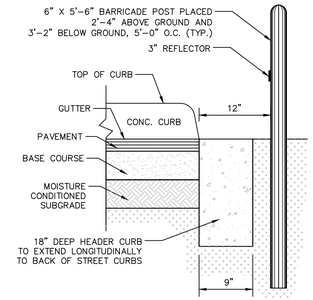

HEADER CURB & BARRICADE POST DETAIL

NOT-TO-SCALE

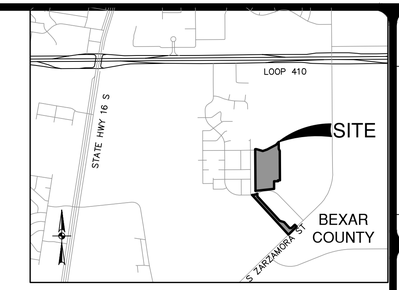

LOCATION MAP

NOT-TO-SCALE

SCALE: 1"= 50'
0' 50' 100' 150'

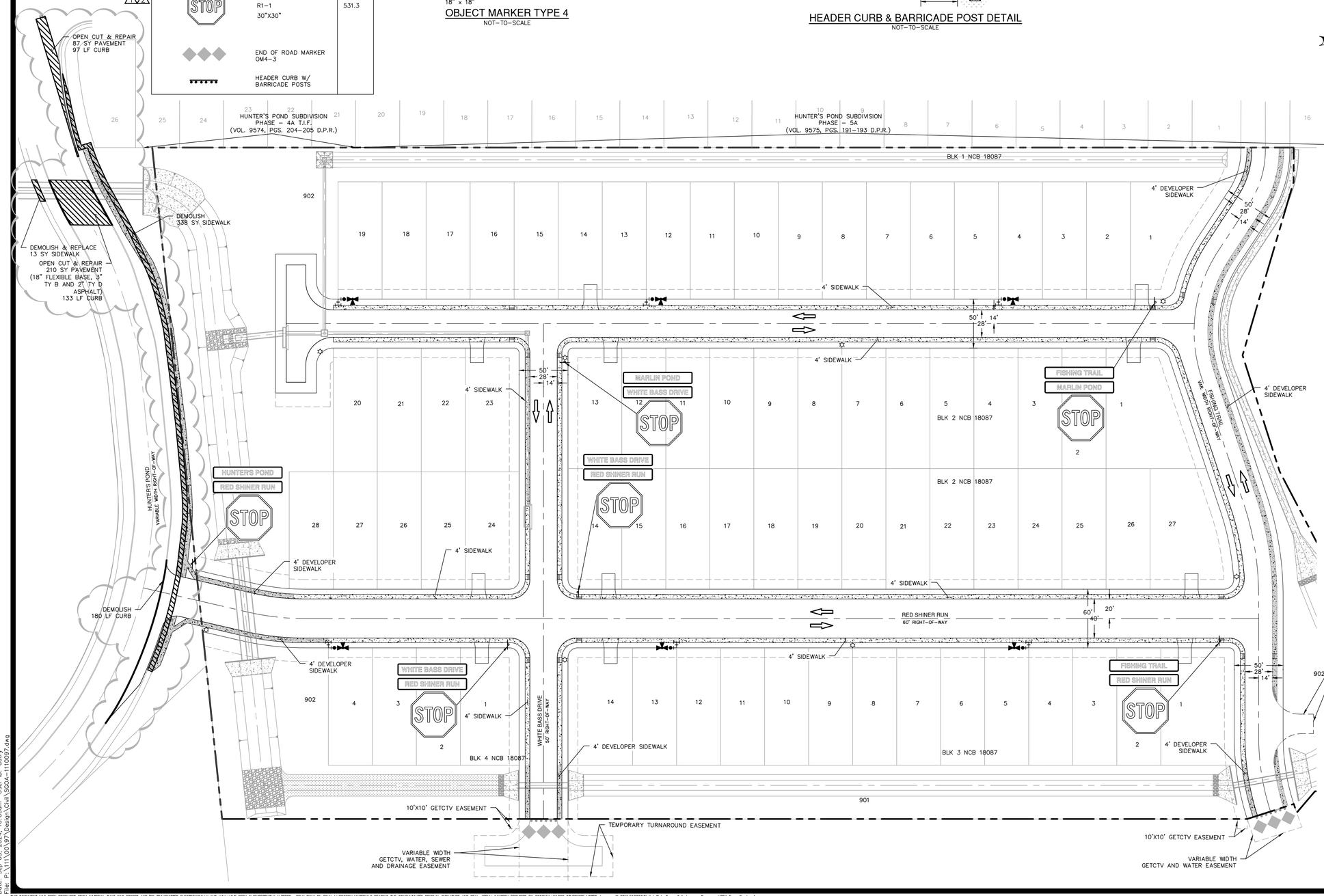

TEMPORARY TURNAROUND EASEMENT
TEMPORARY TURNAROUND IS NOT NEEDED IF UNITS 1 & 2 ARE BUILT CONCURRENTLY. CONTINUE SIDEWALK IF BUILT CONCURRENTLY.

CITY OF SAN ANTONIO ROW NOTES:

A CITY OF SAN ANTONIO PERMIT MUST BE OBTAINED BEFORE WORKING IN CITY OF SAN ANTONIO ROW. CONTRACTOR SHALL COORDINATE A TRAFFIC CONTROL PLAN FOR ALL WORK WITHIN THE ROW. ADDITIONAL WARNING SIGNS MAY BE RECOMMENDED BY THE ENGINEER ONCE THE ROADWAYS ARE CONSTRUCTED.

DRIVEWAY NOTE:

DRIVEWAYS SHOWN ON THIS PLAN ARE FOR THE SOLE PURPOSE OF INDICATING A POTENTIAL CONFLICT WITH CURB RAMP, DRAINAGE INFRASTRUCTURE, OR OTHER CONFLICT. DRIVEWAY LOCATION IS SUBJECT TO CHANGE BASED ON HOME SELECTION AND FINAL LOT DESIGN.

TRENCH EXCAVATION SAFETY PROTECTION:

CONTRACTOR AND/ OR CONTRACTOR'S INDEPENDENTLY RETAINED EMPLOYEE OR STRUCTURAL DESIGN/ GEOTECHNICAL/ SAFETY/EQUIPMENT CONSULTANT, IF ANY, SHALL REVIEW THESE PLANS AND ANY AVAILABLE GEOTECHNICAL INFORMATION AND THE ANTICIPATED INSTALLATION SITES WITHIN THE PROJECT WORK AREA IN ORDER TO IMPLEMENT CONTRACTOR'S TRENCH EXCAVATION SAFETY PROTECTION SYSTEMS, PROGRAMS AND /OR PROCEDURES FOR THE PROJECT DESCRIBED IN THE CONTRACT DOCUMENTS. THE CONTRACTOR'S IMPLEMENTATION OF THESE SYSTEMS, PROGRAMS AND/OR PROCEDURES SHALL PROVIDE FOR ADEQUATE TRENCH EXCAVATION SAFETY PROTECTION THAT COMPLY WITH AS A MINIMUM, OSHA STANDARDS FOR TRENCH EXCAVATIONS. SPECIFICALLY, CONTRACTOR AND/OR CONTRACTOR'S INDEPENDENTLY RETAINED EMPLOYEE OR SAFETY CONSULTANT SHALL IMPLEMENT A TRENCH SAFETY PROGRAM IN ACCORDANCE WITH OSHA STANDARDS GOVERNING THE PRESENCE AND ACTIVITIES OF INDIVIDUALS WORKING IN AND AROUND TRENCH EXCAVATION.

NO.	REVISION	DATE
1	REVISED OPEN CUT & REPAIR SCOPE	01/16/24
2	SPECIFIED REPAIR MATERIAL	09/05/24

STATE OF TEXAS
JON D. ADAME
82567
LICENSED
PROFESSIONAL ENGINEER
Jon Adame
9-5-24

PAPE-DAWSON ENGINEERS
SAN ANTONIO I AUSTIN I HOUSTON I FORT WORTH I DALLAS
2000 NW LOOP 410 I SAN ANTONIO, TX 78213 I 210.375.9000
TEXAS ENGINEERING FIRM #470 I TEXAS SURVEYING FIRM #10028800

SMILEY TRACT UNIT 1
SAN ANTONIO, TEXAS
OVERALL SIGNAGE PLAN

PLAT NO. 22-11800482
JOB NO. 11100-97
DATE AUGUST 2023
DESIGNER AA
CHECKED VS DRAWN AB
SHEET C3.00

Date: Sep 05, 2024, 10:00am User ID: oatry
File: P:\111\00\97\Design\Civil\SGOA-1110097.dwg

THIS DOCUMENT HAS BEEN PRODUCED FROM MATERIAL THAT WAS STORED AND/OR TRANSMITTED ELECTRONICALLY AND MAY HAVE BEEN INADVERTENTLY ALTERED. RELY ONLY ON FINAL HARDCOPY MATERIALS BEARING THE CONSULTANT'S ORIGINAL SIGNATURE AND SEAL. AERIAL IMAGERY PROVIDED BY GOOGLE© UNLESS OTHERWISE NOTED. Imagery © 2016,CAPCOG,Digital Globe,Texas Orthoimagery Program, USDA Farm Service Agency.

DISCLAIMER: The use of this standard is governed by the "Texas Engineering Practice Act". No warranty of any kind is made by TxDOT for any purpose whatsoever. TxDOT assumes no responsibility for the conversion of this standard to other formats or for incorrect results or damages resulting from its use.

SIGN SUPPORT DESCRIPTIVE CODES

(Descriptive Codes correspond to project estimate and quantities sheets)

SM RD SGN ASSM TY XXXXX(X)XX(X-XXXX)

Post Type
- FRP = Fiberglass Reinforced Plastic Pipe (see SMD(FRP))
- TWT = Thin-Walled Tubing (see SMD(TWT))
- 10BWG = 10 BWG Tubing (see SMD(SLIP-1) to (SLIP-3))
- S80 = Schedule 80 Pipe (see SMD(SLIP-1) to (SLIP-3))

Number of Posts (1 or 2)

Anchor Type
- UA = Universal Anchor - Concreted (see SMD(FRP) and (TWT))
- UB = Universal Anchor - Bolted down (see SMD(FRP) and (TWT))
- WS = Wedge Anchor Steel - (see SMD(TWT))
- WP = Wedge Anchor Plastic (see SMD(TWT))
- SA = Slipbase - Concreted (see SMD(SLIP-1) to (SLIP-3))
- SB = Slipbase - Bolted Down (see SMD(SLIP-1) to (SLIP-3))

Sign Mounting Designation
- P = Prefab. "Plain" (see SMD(SLIP-1) to (SLIP-3), (TWT), (FRP))
- T = Prefab. "T" (see SMD(SLIP-1) to (SLIP-3), (TWT))
- U = Prefab. "U" (see SMD(SLIP-1) to (SLIP-3))

IF REQUIRED
- 1EXT or 2EXT = Number of Extensions (see SMD(SLIP-1) to (SLIP-3), (TWT))
- BM = Extruded Wind Beam (see SMD(SLIP-1) to (SLIP-3))
- WC = 1.12 #/ft Wing Channel (see SMD(SLIP-1) to (SLIP-3))
- EXAL = Extruded Aluminum Sign Panels (see SMD(SLIP-3))

REQUIRED CLEARANCE FOR BREAKAWAY SUPPORT

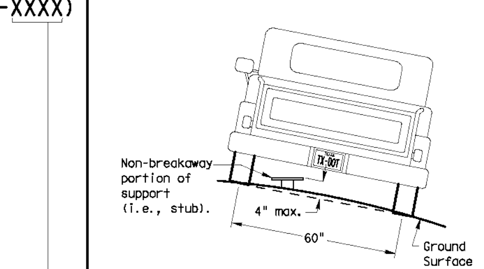

To avoid vehicle undercarriage snagging, any substantial remains of a breakaway support, when it is broken away, should not project more than 4 inches above a 60-inch chord (i.e., typical space between wheel paths).

SIGN LOCATION

PAVED SHOULDERS

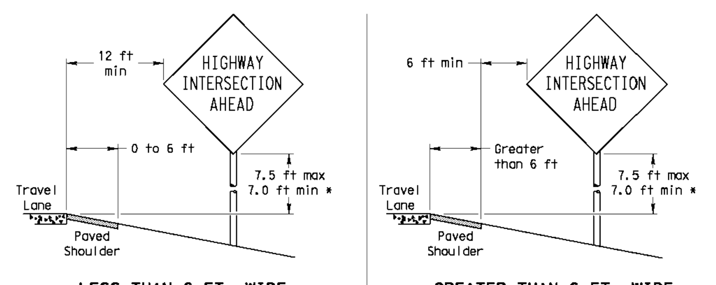

LESS THAN 6 FT. WIDE

When the shoulder is 6 ft. or less in width, the sign must be placed at least 12 ft. from the edge of the travel lane.

GREATER THAN 6 FT. WIDE

When the shoulder is greater than 6 ft in width, the sign must be placed at least 6 ft. from the edge of the shoulder.

T-INTERSECTION

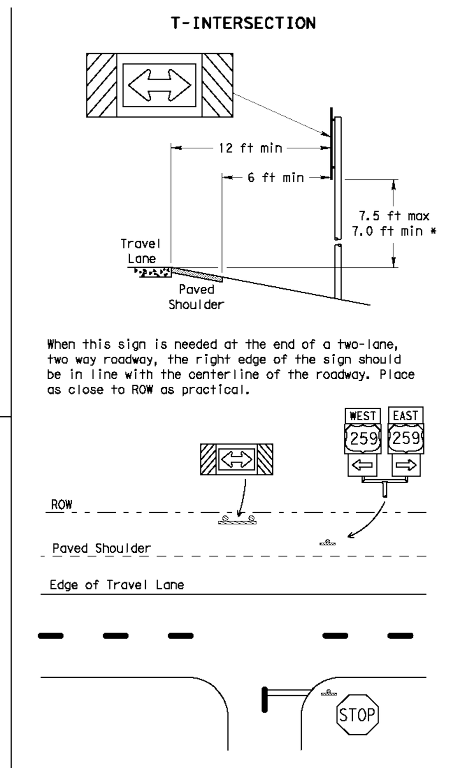

When this sign is needed at the end of a two-lane, two way roadway, the right edge of the sign should be in line with the centerline of the roadway. Place as close to ROW as practical.

BEHIND BARRIER

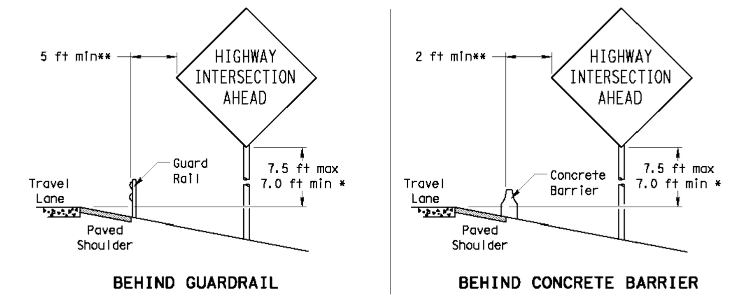

BEHIND GUARDRAIL **BEHIND CONCRETE BARRIER**

**Sign clearance based on distance required for proper guard rail or concrete barrier performance.

* Signs shall be mounted using the following condition that results in the greatest sign elevation:

(1) a minimum of 7 to a maximum of 7.5 feet above the edge of the travel lane or

(2) a minimum of 7 to a maximum of 7.5 feet above the grade at the base of the support when sign is installed on the backslope.

The maximum values may be increased when directed by the Engineer.

See the Traffic Operations Division website for detailed drawings of sign clamps, Triangular Slipbase System components and Wedge Anchor System components.

The website address is:
http://www.txdot.gov/publications/traffic.htm

No more than 2 sign posts should be located within a 7 ft. circle.

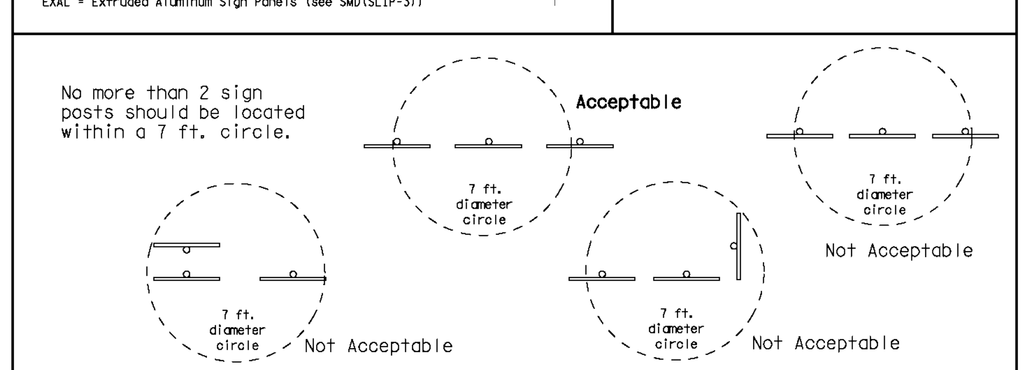

TYPICAL SIGN ATTACHMENT DETAIL

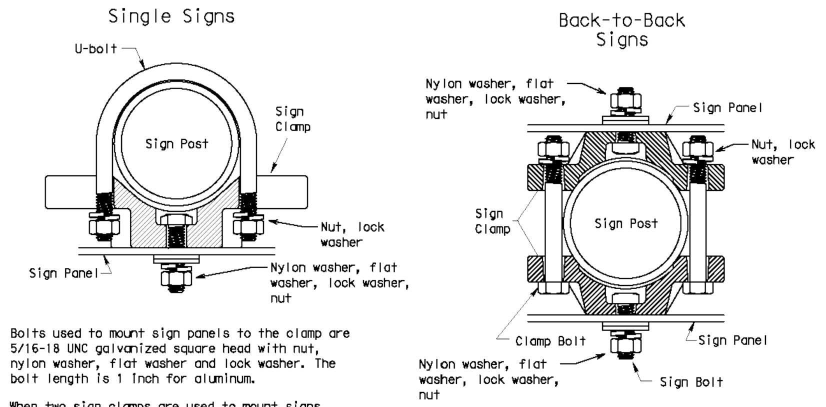

Bolts used to mount sign panels to the clamp are 5/16-18 UNC galvanized square head with nut, nylon washer, flat washer and lock washer. The bolt length is 1 inch for aluminum.

When two sign clamps are used to mount signs back-to-back, use a 5/16-18 UNC galvanized hex head per ASTM A307 with nut and helical-spring lock washer. The approximate bolt lengths for various post sizes and sign clamp types are given in the table at right. The bolt length may need to be adjusted depending upon field conditions.

Sign clamps may be either the specific size clamp or the universal clamp.

Pipe Diameter	Approximate Bolt Length	
	Specific Clamp	Universal Clamp
2" nominal	3"	3 or 3 1/2"
2 1/2" nominal	3 or 3 1/2"	3 1/2 or 4"
3" nominal	3 1/2 or 4"	4 1/2"

SIGNS WITH PLAQUES

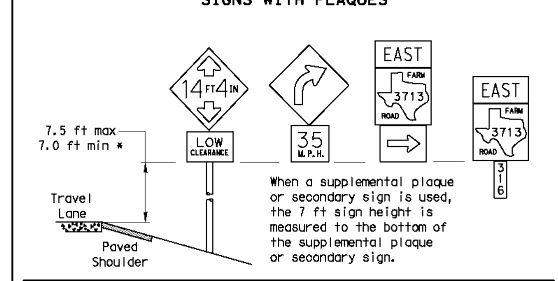

When a supplemental plaque or secondary sign is used, the 7 ft sign height is measured to the bottom of the supplemental plaque or secondary sign.

CURB & GUTTER OR RAISED ISLAND

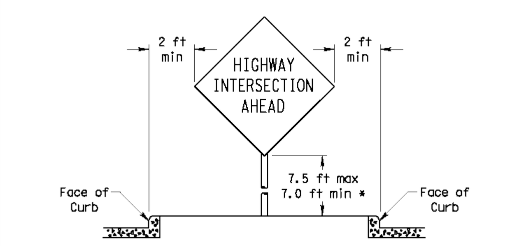

RESTRICTED RIGHT-OF-WAY
(When 6 ft min. is not possible.)

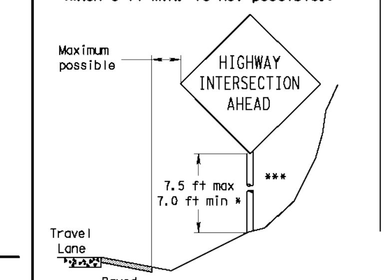

Right-of-way restrictions may be created by rocks, water, vegetation, forest, buildings, a narrow island, or other factors.

In situations where a lateral restriction prevents the minimum horizontal clearance from the edge of the travel lane, signs should be placed as far from the travel lane as practical.

*** Post may be shorter if protected by guardrail or if Engineer determines the post could not be hit due to extreme slope.

Texas Department of Transportation — *Traffic Operations Division*

SIGN MOUNTING DETAILS
SMALL ROADSIDE SIGNS
GENERAL NOTES & DETAILS

SMD(GEN)-08

©TxDOT July 2002 | 9-08 REVISIONS | DN: TXDOT | CK: TXDOT | DW: TXDOT | CK: TXDOT | CONT | SECT | JOB | HIGHWAY | DIST | COUNTY | SHEET NO.

26A

DISCLAIMER: The use of this standard is governed by the "Texas Engineering Practice Act". No warranty of any kind is made by TxDOT for any purpose whatsoever. TxDOT assumes no responsibility for the conversion of this standard to other formats or for incorrect results or damages resulting from its use.

TRIANGULAR SLIPBASE INSTALLATION GENERAL REQUIREMENTS

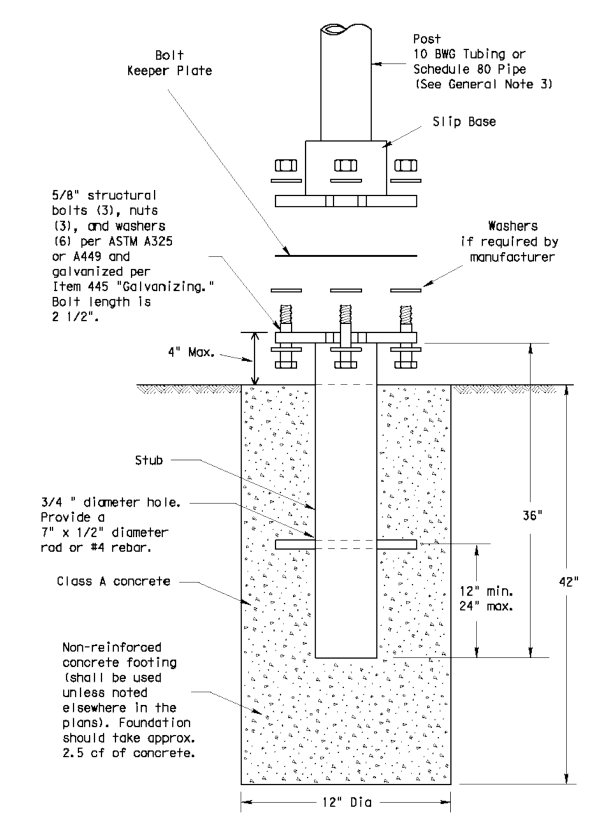

SM RD SGN ASSM TY XXXXX(X)SA(X-XXXX)

NOTE

There are various devices approved for the Triangular Slipbase System. Please reference the Material Producer List for approved slip base systems. http://www.txdot.gov/business/producer_list.htm The devices shall be installed per manufacturers' recommendations. Installation procedures shall be provided to the Engineer by Contractor.

GENERAL NOTES:

1. Slip base shall be permanently marked to indicate manufacturer. Method, design, and location of marking are subject to approval of the TxDOT Traffic Standards Engineer.
2. Material used as post with this system shall conform to the following specifications:
   10 BWG Tubing (2.875" outside diameter)
   0.134" nominal wall thickness
   Seamless or electric-resistance welded steel tubing or pipe
   Steel shall be HSLAS Gr 55 per ASTM A1011 or ASTM A1008
   Other steels may be used if they meet the following:
   55,000 PSI minimum yield strength
   70,000 PSI minimum tensile strength
   20% minimum elongation in 2"
   Wall thickness (uncoated) shall be within the range of 0.122" to 0.138"
   Outside diameter (uncoated) shall be within the range of 2.867" to 2.883"
   Galvanization per ASTM A123 or ASTM A653 G210. For precoated steel tubing (ASTM A653), recoat tube outside diameter weld seam by metallizing with zinc wire per ASTM B833.
   Schedule 80 Pipe (2.875" outside diameter)
   0.276" nominal wall thickness
   Steel tubing per ASTM A500 Gr C
   Other seamless or electric-resistance welded steel tubing or pipe with equivalent outside diameter and wall thickness may be used if they meet the following:
   46,000 PSI minimum yield strength
   62,000 PSI minimum tensile strength
   21% minimum elongation in 2"
   Wall thickness (uncoated) shall be within the range of 0.248" to 0.304"
   Outside diameter (uncoated) shall be within the range of 2.855" to 2.895"
   Galvanization per ASTM A123
3. See the Traffic Operations Division website for detailed drawings of sign clamps and Texas Universal Triangular Slipbase System components. The website address is:
   http://www.txdot.gov/publications/traffic.htm
4. Sign supports shall not be spliced except where shown. Sign support posts shall not be spliced.

ASSEMBLY PROCEDURE

Foundation
1. Prepare 12-inch diameter by 42-inch deep hole. If solid rock is encountered, the depth of the foundation may be reduced such that it is embedded a minimum of 18 inches into the solid rock.
2. The Engineer may permit batches of concrete less than 2 cubic yards to be mixed with a portable, motor-driven concrete mixer. For small placements less than 0.5 cubic yards, hand mixing in a suitable container may be allowed by Engineer. Concrete shall be Class A.
3. Push the pipe end of the slip base stub into the center of the concrete. Rotate the stub back and forth while pushing it down into the concrete to assure good contact between the concrete and stub. Continue to work the stub into the concrete until it is between 2 to 4 inches above the ground.
4. Plumb the stub. Allow a minimum of 4 days to set, unless otherwise directed by the Engineer.
5. The triangular slipbase system is multidirectional and is designed to release when struck from any direction.

Support
1. Cut support so that the bottom of the sign will be 7 to 7.5 feet above the edge of the travelway (i.e., edge of the closest lane) when slip plate is below the edge of pavement or 7 to 7.5 feet above slip plate when the slip plate is above the edge of the travelway. The cut shall be plumb and straight.
2. Attach sign to support using connections shown. When multiple signs are installed on the same support, ensure the minimum clearance between each sign is maintained. See SMD(SLIP-2) for clearances based on sign types.

CONCRETE ANCHOR

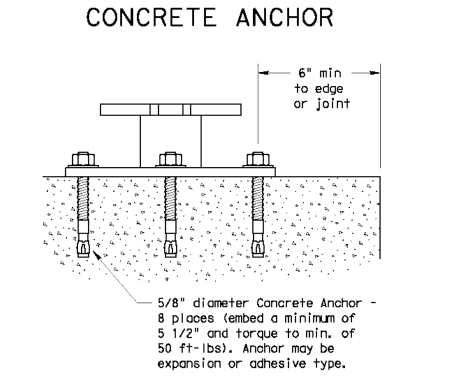

SM RD SGN ASSM TY XXXXX(X)SB(X-XXXX)

Concrete anchor consists of 5/8" diameter stud bolt with UNC series bolt threads on the upper end. Heavy hex nut per ASTM A563, and hardened washer per ASTM F436. The stud bolt shall have a minimum yield and ultimate tensile strength of 50 and 75 KSI, respectively. Nuts, bolts and washers shall be galvanized per Item 445, "Galvanizing." Adhesive type anchors shall have stud bolts installed with Type III epoxy per DMS-6100, "Epoxies and Adhesives." Adhesive anchors may be loaded after adequate epoxy cure time per the manufacturer's recommendations. Top of bolt shall extend at least flush with top of the nut when installed. The anchor, when installed in 4000 psi normal-weight concrete with a 5 1/2" minimum embedment, shall have a minimum allowable tension and shear of 3900 and 3100 psi, respectively.

Texas Department of Transportation — *Traffic Operations Division*

SIGN MOUNTING DETAILS
SMALL ROADSIDE SIGNS
TRIANGULAR SLIPBASE SYSTEM

SMD(SLIP-1)-08

©TxDOT July 2002 | 9-08 REVISIONS | DN: TXDOT | CK: TXDOT | DW: TXDOT | CK: TXDOT | CONT | SECT | JOB | HIGHWAY | DIST | COUNTY | SHEET NO.

26B

DISCLAIMER: The use of this standard is governed by the "Texas Engineering Practice Act". No warranty of any kind is made by TxDOT for any purpose whatsoever. TxDOT assumes no responsibility for the conversion of this standard to other formats or for incorrect results or damages resulting from its use.

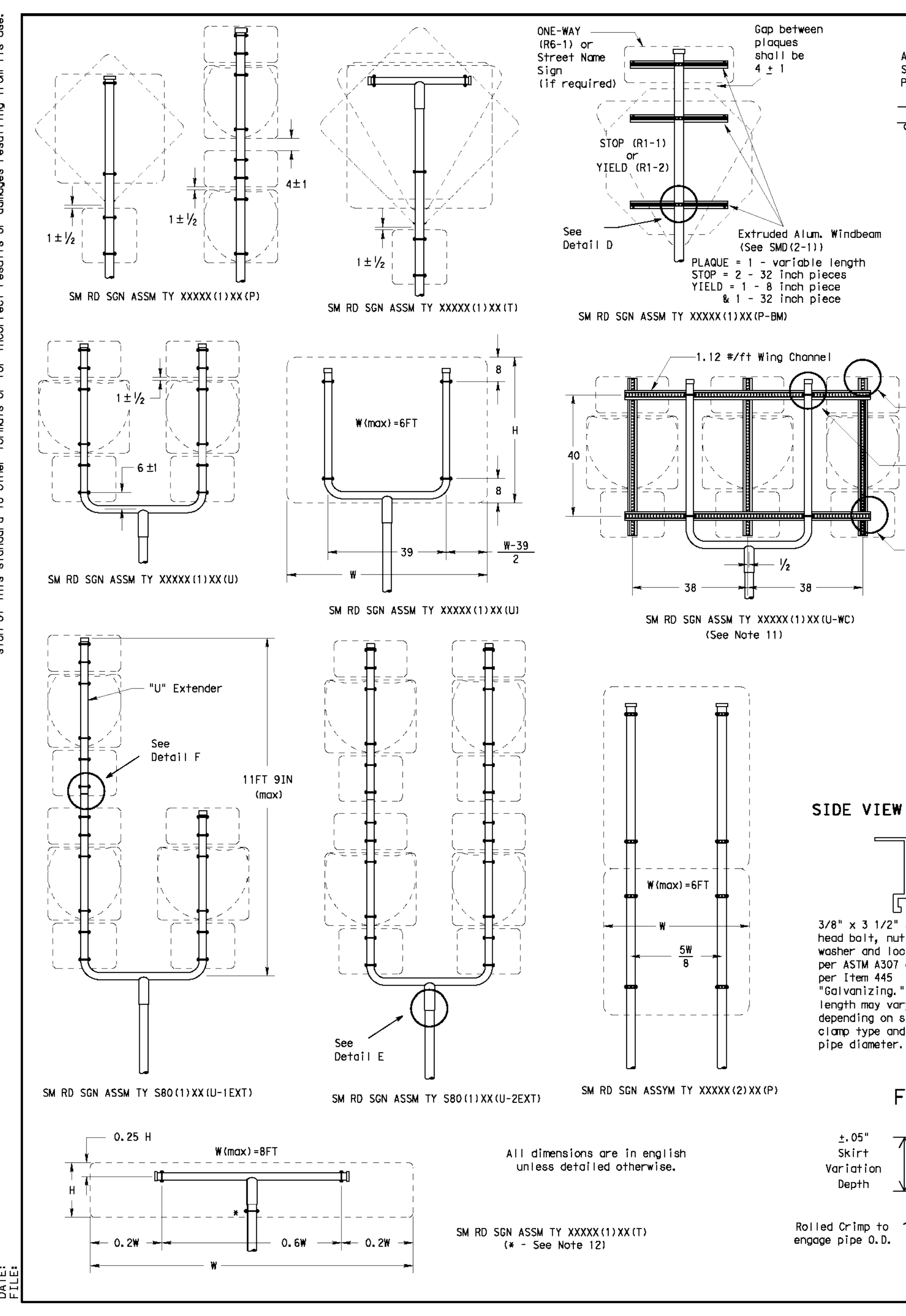

All dimensions are in english unless detailed otherwise.

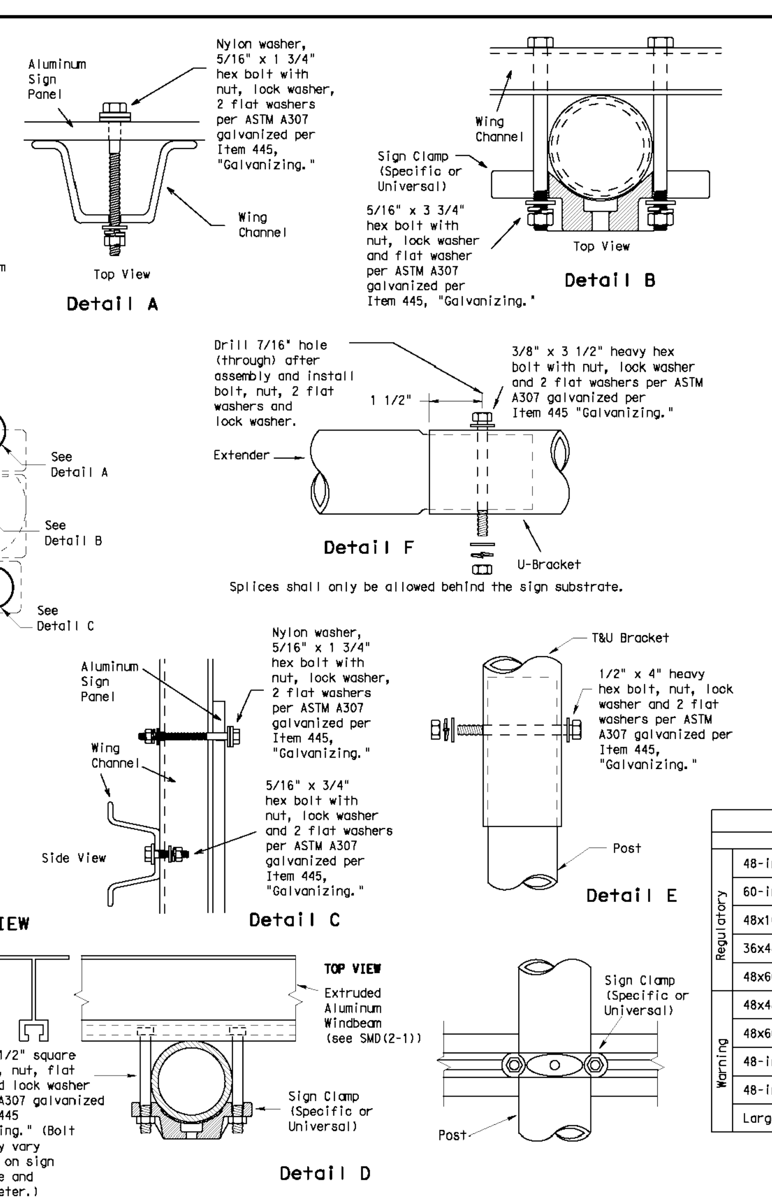

FRICTION CAP DETAIL

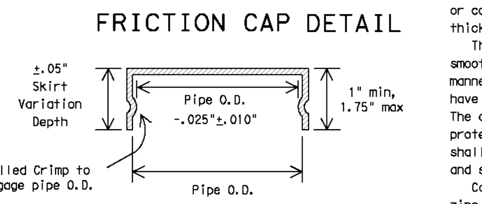

Friction caps may be manufactured from hot rolled or cold rolled steel sheets. The minimum sheet metal thickness shall be 24 gauge for all cap sizes.

The rim edges shall be reasonably straight and smooth. Caps shall be sized and formed in such a manner as to produce a drive-on friction fit and have no tendency to rock when seated on the pipe. The depth shall be sufficient to give positive protection against entrance of rainwater. They shall be free of sharp creases or indentations and show no evidence of metal fracture.

Caps shall have an electrodeposited coating of zinc in accordance with the requirements of ASTM B633 Class FE/ZN 8.

GENERAL NOTES:

1.

SIGN SUPPORT	# OF POSTS	MAX. SIGN AREA
10 BWG	1	16 SF
10 BWG	2	32 SF
Sch 80	1	32 SF
Sch 80	2	64 SF

2. The Engineer may require that a Schedule 80 post be used in place of a 10 BWG where a sign height is abnormally high due to a fill slope.
3. Sign supports shall not be spliced except where shown. Sign support posts shall not be spliced.
4. Aluminum sign blanks shall conform to Departmental Material Specifications DMS-7110 and shall have the following minimum thicknesses: 0.080 for signs less than 7.5 sq. ft., 0.100 for signs 7.5 to 15 sq. ft., and 0.125 for signs greater than 15 sq. ft.
5. Signs that require specific supports due to reasons in addition to windloading are indicated on the "REQUIRED SUPPORT" table on this sheet.
6. For horizontal rectangular signs fabricated from flat aluminum, T-brackets are used for signs 24 inches or less in height. U-brackets are used for signs of greater height.
7. When two triangular slipbase supports are used to support a single sign, they shall not be "rigidly" connected to each other except through the sign panel. This will allow each support to act independently when impacted by an errant vehicle.
8. Wing channel shall meet ASTM A 1011 SS Gr 50 and be galvanized per ASTM A 123.
9. Excess pipe, wing channel, or windbeam shall be cut off so that it does not extend beyond the sign panel (i.e., excess support shall not be visible when the sign is viewed from the front.) Repair galvanized coating at cut support ends per Item 445, "Galvanizing."
10. Additional route markers may be added vertically, provided the total sign area does not exceed the maximum allowable amount per Note 1.
11. Additional sign clamp required on the "T-bracket" post for 24 inch height signs. Place the clamp 3 inches above bottom of sign when possible.
12. Post open ends shall be fitted with Friction Caps.
13. Sign blanks shall be the sizes and shapes shown on the plans.

REQUIRED SUPPORT

	SIGN DESCRIPTION	SUPPORT
Regulatory	48-inch STOP sign (R1-1)	TY 10BWG(1)XX(T) TY 10BWG(1)XX(P-BM)
Regulatory	60-inch YIELD sign (R1-2)	TY 10BWG(1)XX(T) TY 10BWG(1)XX(P-BM)
Regulatory	48x16-inch ONE-WAY sign (R6-1)	TY 10BWG(1)XX(T) TY 10BWG(1)XX(P-BM)
Regulatory	36x48, 48x36, and 48x48-inch signs	TY 10BWG(1)XX(T)
Regulatory	48x60-inch signs	TY S80(1)XX(T)
Warning	48x48-inch signs (diamond or square)	TY 10BWG(1)XX(T)
Warning	48x60-inch signs	TY S80(1)XX(T)
Warning	48-inch Advance School X-ing sign (S1-1)	TY 10BWG(1)XX(T)
Warning	48-inch School X-ing sign (S2-1)	TY 10BWG(1)XX(T)
Warning	Large Arrow sign (W1-6 & W1-7)	TY 10BWG(1)XX(T)

Texas Department of Transportation — *Traffic Operations Division*

SIGN MOUNTING DETAILS
SMALL ROADSIDE SIGNS
TRIANGULAR SLIPBASE SYSTEM

SMD(SLIP-2)-08

©TxDOT July 2002 | 9-08 REVISIONS | DN: TXDOT | CK: TXDOT | DW: TXDOT | CK: TXDOT | CONT | SECT | JOB | HIGHWAY | DIST | COUNTY | SHEET NO.

26C

DISCLAIMER: The use of this standard is governed by the "Texas Engineering Practice Act". No warranty of any kind is made by TxDOT for any purpose whatsoever. TxDOT assumes no responsibility for the conversion of this standard to other formats or for incorrect results or damages resulting from its use.

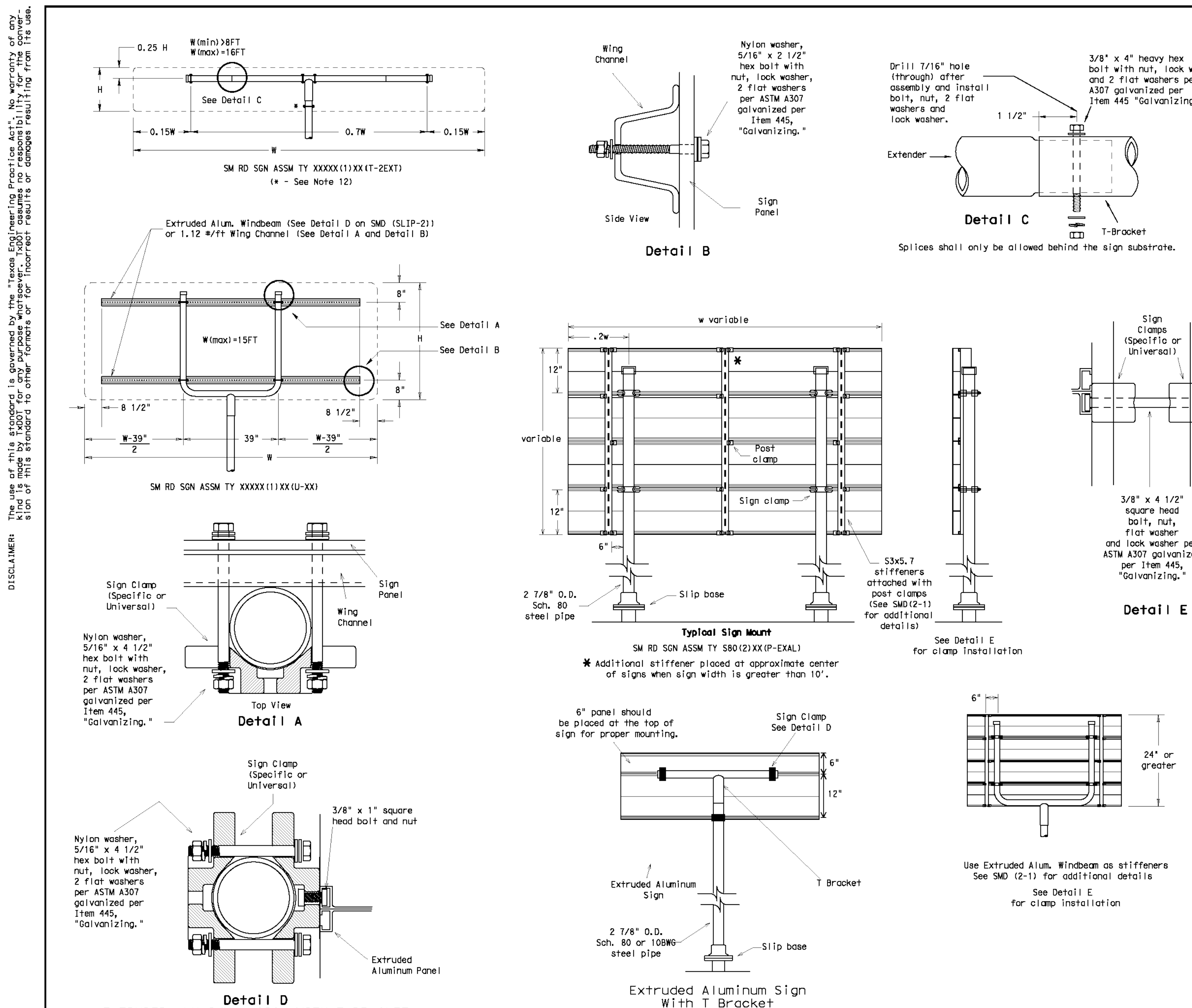

GENERAL NOTES:

1.

SIGN SUPPORT	# OF POSTS	MAX. SIGN AREA
10 BWG	1	16 SF
10 BWG	2	32 SF
Sch 80	1	32 SF
Sch 80	2	64 SF

2. The Engineer may require that a Schedule 80 post be used in place of a 10 BWG where a sign height is abnormally high due to a fill slope.
3. Sign supports shall not be spliced except where shown. Sign support posts shall not be spliced.
4. Aluminum sign blanks shall conform to Departmental Material Specifications DMS-7110 and shall have the following minimum thicknesses: 0.080 for signs less than 7.5 sq. ft., 0.100 for signs 7.5 to 15 sq. ft., and 0.125 for signs greater than 15 sq. ft.
5. Signs that require specific supports due to reasons in addition to windloading are indicated on the "REQUIRED SUPPORT" table on this sheet.
6. For horizontal rectangular signs fabricated from flat aluminum, T-brackets are used for signs 24 inches or less in height. U-brackets are used for signs of greater height.
7. When two triangular slipbase supports are used to support a single sign, they shall not be "rigidly" connected to each other except through the sign panel. This will allow each support to act independently when impacted by an errant vehicle.
8. Wing channel shall meet ASTM A 1011 SS Gr 50 and be galvanized per ASTM A 123.
9. Excess pipe, wing channel, or windbeam shall be cut off so that it does not extend beyond the sign panel (i.e., excess support shall not be visible when the sign is viewed from the front.) Repair galvanized coating at cut support ends per Item 445, "Galvanizing."
10. Sign blanks shall be the sizes and shapes shown on the plans.
11. Additional sign clamp required on the "T-bracket" post for 24 inch high signs. Place the clamp 3 inches above bottom of sign when possible.
12. Post open ends shall be fitted with Friction Caps.

REQUIRED SUPPORT

	SIGN DESCRIPTION	SUPPORT
Regulatory	48-inch STOP sign (R1-1)	TY 10BWG(1)XX(T) TY 10BWG(1)XX(P-BM)
Regulatory	60-inch YIELD sign (R1-2)	TY 10BWG(1)XX(T) TY 10BWG(1)XX(P-BM)
Regulatory	48x16-inch ONE-WAY sign (R6-1)	TY 10BWG(1)XX(T) TY 10BWG(1)XX(P-BM)
Regulatory	36x48, 48x36, and 48x48-inch signs	TY 10BWG(1)XX(T)
Regulatory	48x60-inch signs	TY S80(1)XX(T)
Warning	48x48-inch signs (diamond or square)	TY 10BWG(1)XX(T)
Warning	48x60-inch signs	TY S80(1)XX(T)
Warning	48-inch Advance School X-ing sign (S1-1)	TY 10BWG(1)XX(T)
Warning	48-inch School X-ing sign (S2-1)	TY 10BWG(1)XX(T)
Warning	Large Arrow sign (W1-6 & W1-7)	TY 10BWG(1)XX(T)

Texas Department of Transportation — *Traffic Operations Division*

SIGN MOUNTING DETAILS
SMALL ROADSIDE SIGNS
TRIANGULAR SLIPBASE SYSTEM

SMD(SLIP-3)-08

©TxDOT July 2002 | 9-08 REVISIONS | DN: TXDOT | CK: TXDOT | DW: TXDOT | CK: TXDOT | CONT | SECT | JOB | HIGHWAY | DIST | COUNTY | SHEET NO.

26D

NO.	REVISION	DATE

STATE OF TEXAS — JON D. ADAME — 82567 — LICENSED PROFESSIONAL ENGINEER

Jon Adame 4-18-23

PAPE-DAWSON ENGINEERS

SAN ANTONIO I AUSTIN I HOUSTON I FORT WORTH I DALLAS
2000 NW LOOP 410 I SAN ANTONIO, TX 78213 I 210.375.9000
TEXAS ENGINEERING FIRM #470 I TEXAS SURVEYING FIRM #10028800

SMILEY TRACT UNIT 1

SAN ANTONIO, TEXAS

SIGNAGE DETAILS SHEET 1 OF 3

PLAT NO. 22-11800482
JOB NO. 11100-97
DATE APRIL 2023
DESIGNER AA
CHECKED VS DRAWN AA
SHEET C3.10

Date: Apr 18, 2023, 1:43pm User ID: aatry
File: P:\111\00\97\Design\Civil\SGDT-1110097.dwg

THIS DOCUMENT HAS BEEN PRODUCED FROM MATERIAL THAT WAS STORED AND/OR TRANSMITTED ELECTRONICALLY AND MAY HAVE BEEN INADVERTENTLY ALTERED. RELY ONLY ON FINAL HARDCOPY MATERIALS BEARING THE CONSULTANT'S ORIGINAL SIGNATURE AND SEAL. AERIAL IMAGERY PROVIDED BY GOOGLE© UNLESS OTHERWISE NOTED. Imagery © 2016,CAPCOG,Digital Globe,Texas Orthoimagery Program, USDA Farm Service Agency.

TYPICAL STANDARD PAVEMENT MARKINGS — PM(1)-20

DISCLAIMER: The use of this standard is governed by the "Texas Engineering Practice Act". No warranty of any kind is made by TxDOT for any purpose whatsoever. TxDOT assumes no responsibility for the conversion of this standard to other formats or for incorrect results or damages resulting from its use.

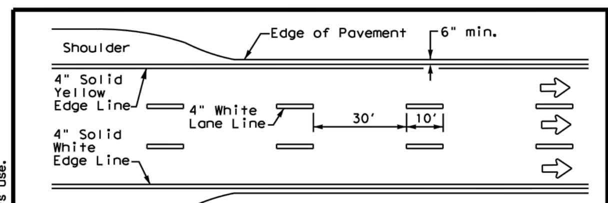

EDGE LINE AND LANE LINES
ONE-WAY ROADWAY
WITH OR WITHOUT SHOULDERS

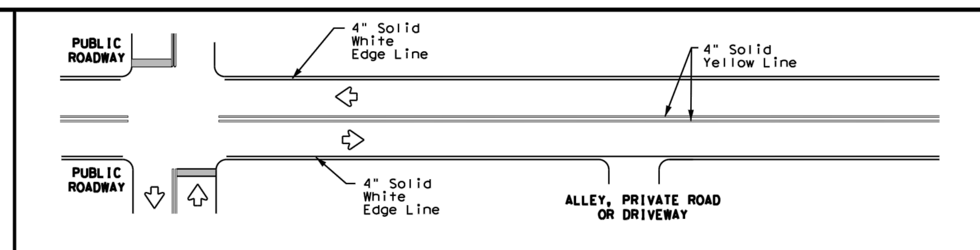

TYPICAL TWO-LANE, TWO-WAY PAVEMENT MARKINGS THROUGH INTERSECTIONS

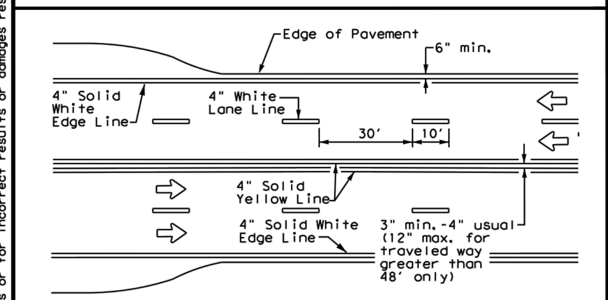

CENTERLINE AND LANE LINES
FOUR LANE TWO-WAY ROADWAY
WITH OR WITHOUT SHOULDERS

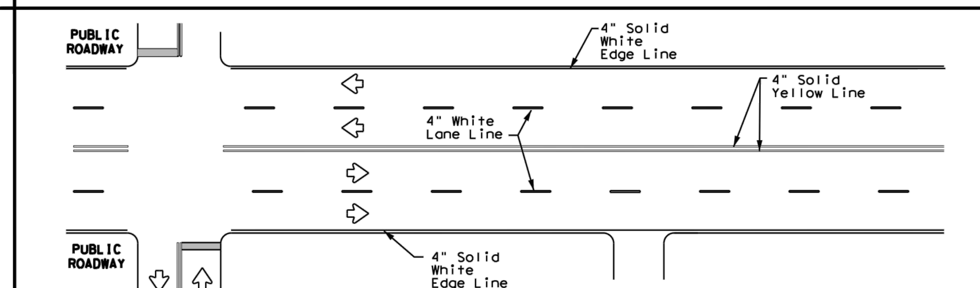

TYPICAL MULTI-LANE, TWO-WAY PAVEMENT MARKINGS THROUGH INTERSECTIONS

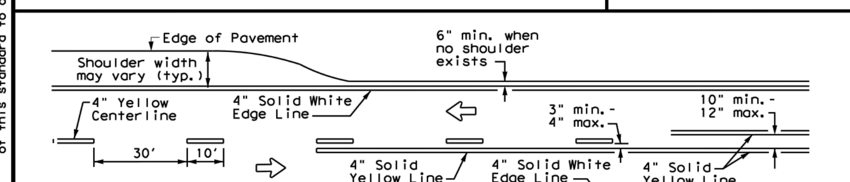

TWO LANE TWO-WAY ROADWAY
WITH OR WITHOUT SHOULDERS

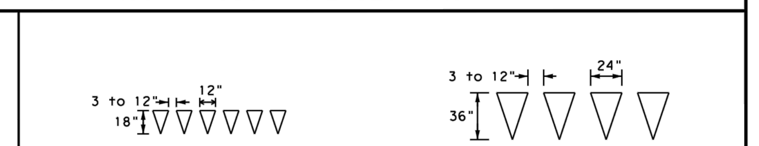

YIELD LINES

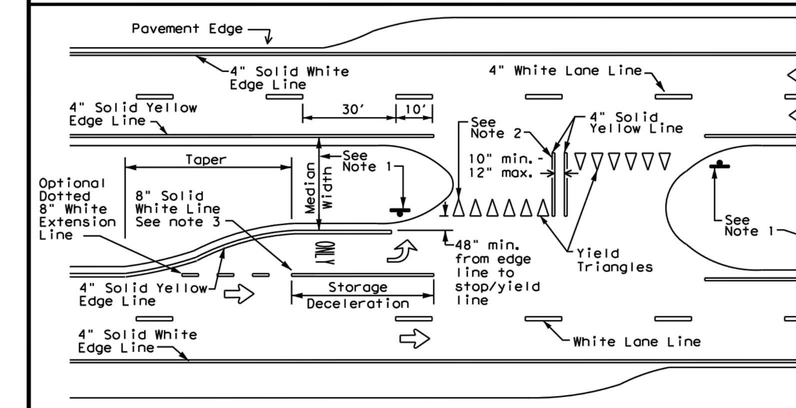

FOUR LANE DIVIDED ROADWAY CROSSOVERS

NOTES

1. Where divided highways are separated by median widths at the median opening itself of 30 feet or more, median openings shall be signed as two separate intersections. Each median opening has two width measurements, with one measurement for each approach. The narrow median width will be the controlling width to determine if signs are required. Yield signs are the typical intersection control. Stop signs are optional as determined by the Engineer.
2. Install median striping (double yellow centerlines and stop bars/yield triangles) when a 50' or greater median centerline can be placed. Stop bars shall only be used with stop signs. Yield traingles shall only be used with yield signs.
3. Length of turn bays, including taper, deceleration, and storage lengths shall be as shown on the plans or as directed by the Engineer.

GENERAL NOTES

1. Edgeline striping shall be as shown in the plans or as directed by the Engineer. The edgeline should not be placed less less than 6 inches from the edge of pavement. This distance may vary due to pavement raveling or other conditions. Edgelines are not required in curb and gutter sections of roadways.
2. The traveled way includes only that portion of the roadway used for vehicular travel. It does not include the parking lanes, sidewalks, berms and shoulders. The traveled ways shall be measured from the inside of edgeline to the inside of edgeline of a two lane roadway.

MATERIAL SPECIFICATIONS	
PAVEMENT MARKERS (REFLECTORIZED)	DMS-4200
EPOXY AND ADHESIVES	DMS-6100
BITUMINOUS ADHESIVE FOR PAVEMENT MARKERS	DMS-6130
TRAFFIC PAINT	DMS-8200
HOT APPLIED THERMOPLASTIC	DMS-8220
PERMANENT PREFABRICATED PAVEMENT MARKINGS	DMS-8240

All pavement marking materials shall meet the required Departmental Material Specifications as specified by the plans.

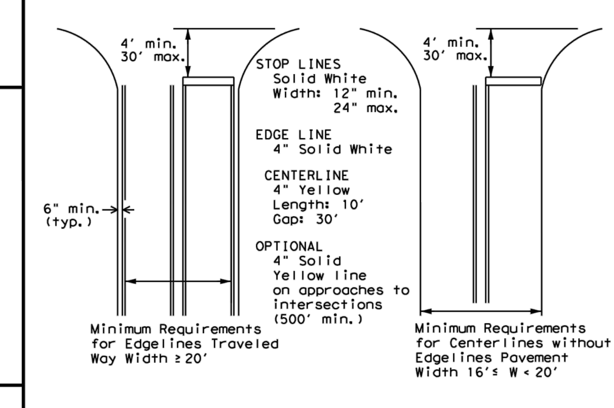

GUIDE FOR PLACEMENT OF STOP LINES, EDGE LINE & CENTERLINE
Based on Traveled Way and Pavement Widths for Undivided Highways

Texas Department of Transportation — Traffic Safety Division Standard

TYPICAL STANDARD PAVEMENT MARKINGS

PM(1)-20

FILE: pm1-20.dgn	DN:	CK:	DW:	CK:
© TxDOT November 1978	CONT	SECT	JOB	HIGHWAY
REVISIONS 8-95 3-03, 5-00 2-12, 8-00 6-20	DIST	COUNTY		SHEET NO.

22A

DATE:
FILE:

SIGN MOUNTING DETAILS — SMD(TWT)-08

DISCLAIMER: The use of this standard is governed by the "Texas Engineering Practice Act". No warranty of any kind is made by TxDOT for any purpose whatsoever. TxDOT assumes no responsibility for the conversion of this standard to other formats or for incorrect results or damages resulting from its use.

Wedge Anchor Steel System

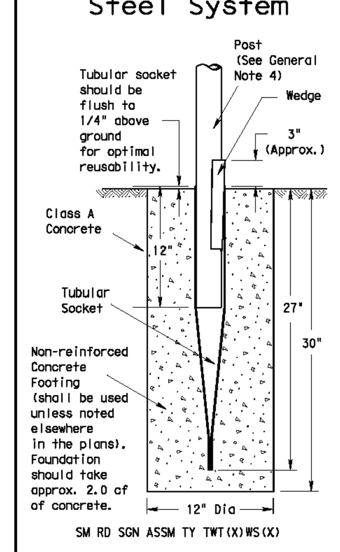

SM RD SGN ASSM TY TWT(X)WS(X)

Wedge Anchor High Density Polyethylene (HDPE) System

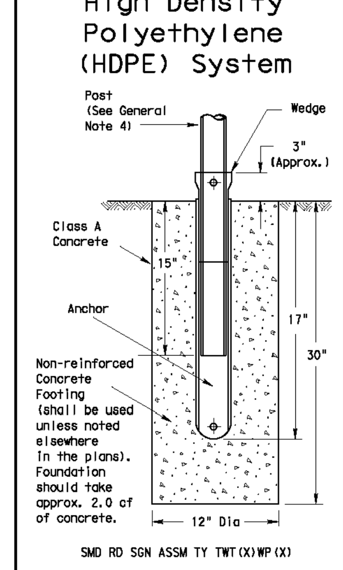

SMD RD SGN ASSM TY TWT(X)WP(X)

Universal Anchor System with Thin-Walled Tubing Post

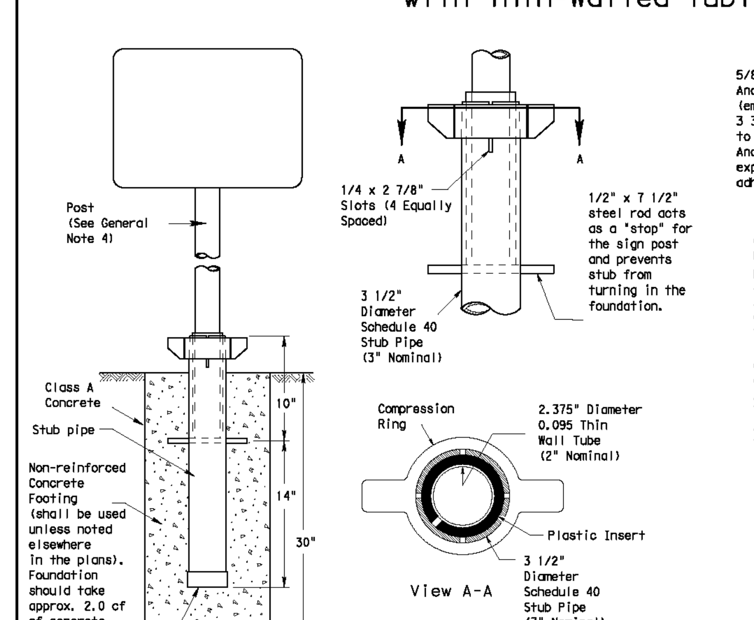

SM RD SGN ASSM TY TWT(X)UA(P)

Plastic insert must be used when using the TWT with either the Universal Anchor System or the Bolt Down Universal Anchor System. The insert should be approx. 10" long and cover the tubing from just above the top of the stub pipe to the bottom of the sign post when using the Universal Anchor System. The insert should be cut to approx. 4 1/2" when used with the Bolt Down Universal Anchor System.

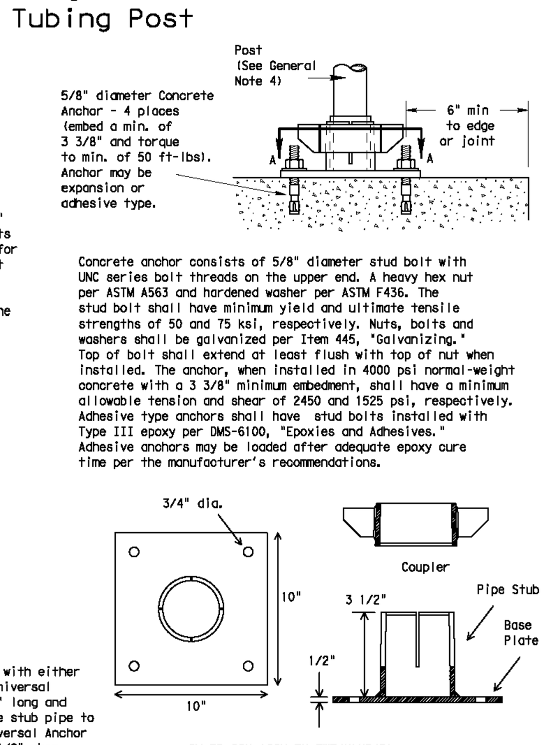

Concrete anchor consists of 5/8" diameter stud bolt with UNC series bolt threads on the upper end. A heavy hex nut per ASTM A563 and hardened washer per ASTM F436. The stud bolt shall have minimum yield and ultimate tensile strengths of 50 and 75 ksi, respectively. Nuts, bolts and washers shall be galvanized per Item 445, "Galvanizing." Top of bolt shall extend at least flush with top of nut when installed. The anchor, when installed in 4000 psi normal-weight concrete with a 3 3/8" minimum embedment, shall have a minimum allowable tension and shear of 2450 and 1525 psi, respectively. Adhesive type anchors shall have stud bolts installed with Type III epoxy per DMS-6100, "Epoxies and Adhesives." Adhesive anchors may be loaded after adequate epoxy cure time per the manufacturer's recommendations.

SM RD SGN ASSM TY TWT(X)UB(P)

Sign Installation Using a Prefabricated T-Bracket for Thin-Wall Tubing Post

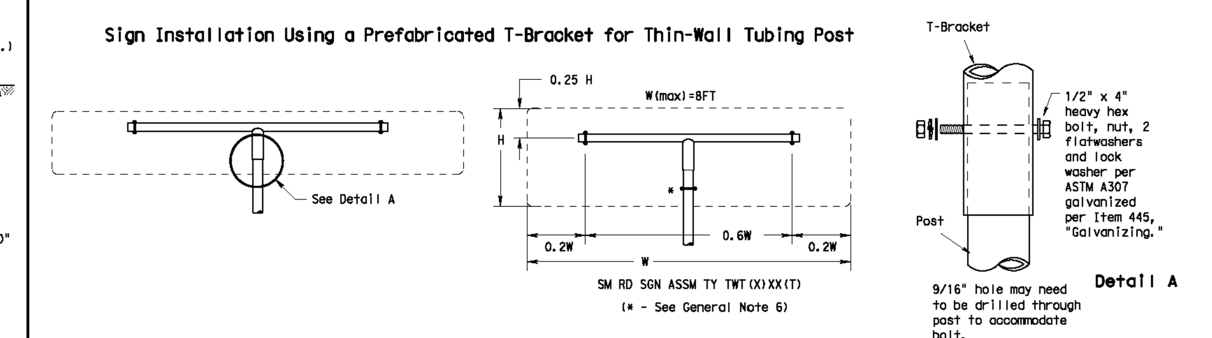

SM RD SGN ASSM TY TWT(X)XX(T)
(* - See General Note 6)

NOTE

The devices shall be installed per manufacturer's recommendations.
Installation procedures shall be provided to the Engineer by Contractor.

GENERAL NOTES:
1. The Wedge Anchor System and the Universal Anchor System with thin wall tubing post may be used to support up to 10 square feet of sign area.
2. The tubular socket, wedge and prefabricated T-bracket shall be permanently marked to indicate manufacturer. Method, design, and location of marking are subject to the approval of the TxDOT Traffic Standards Engineer.
3. Except for posts (13 BWG Tubing), clamps, nuts and bolts, all components shall be prequalified. A list of prequalified vendors may be obtained from the Material Producer List web page. The website address is: http://www.txdot.gov/business/producer list.htm
4. Material used as post with this system shall conform to the following specifications: 13 BWG Tubing (2.375" outside diameter) (TWT)
   0.095" nominal wall thickness
   Seamless or electric-resistance welded steel tubing
   Steel shall be HSLAS Gr 55 per ASTM A1011 or ASTM A1008
   Other steels may be used if they meet the following:
   55,000 PSI minimum yield strength
   70,000 PSI minimum tensile strength
   18% minimum elongation in 2"
   Wall thickness (uncoated) shall be within the range of .083" to .099"
   Outside diameter (uncoated) shall be within the range of 2.369" to 2.381"
   Galvanization per ASTM 123 or ASTM A653 G210. For precoated steel tubing (ASTM A653), recoat tube outside diameter weld seam by metallizing with zinc wire per ASTM B833.
5. Sign blanks shall be the sizes and shapes shown on the plans.
6. Additional sign clamp required on the "T-bracket" post for 24" high signs. Place clamp at least 3" above bottom of sign when possible.
7. Sign supports shall not be spliced except where shown. Sign support posts shall not be spliced.
8. See the Traffic Operations Division website for detailed drawings of sign clamps and Wedge Anchor System components. The website address is: http://www.txdot.gov/publications/traffic.htm

WEDGE ANCHOR SYSTEM INSTALLATION PROCEDURE
1. Dig foundation hole. Where solid rock is encountered at ground level, the foundation shall be a minimum depth of 18". When solid rock is encountered below ground level, the foundation shall extend in the solid rock a minimum depth of 18" or provide a minimum foundation depth of 30". If solid rock is encountered, the socket/stub may be reduced in length as required to a minimum length of 18". Any material removed from the socket/stub shall be from the bottom and the clearance requirements given on SMD(GEN) must be followed. The inner surfaces of the socket/stub must remain free of concrete or other debris.
2. The Engineer may permit batches of concrete less than 2 cubic yards to be mixed with a portable, motor driven concrete mixer. For small placements less than 0.5 cubic yards, hand mixing in a suitable container may be allowed by Engineer. Place concrete into hole until it is approximately flush with the ground. Concrete shall be Class A.
3. Insert tubular socket into concrete until top of socket is approximaely 1/4 " above the concrete footing.
4. Plumb the socket. Allow a minimum 4 days for concrete to set, unless otherwise directed by Engineer..
5. Attach the sign to the sign post.
6. Insert the sign post into socket and align sign face with roadway.
7. Drive the wedge into the socket to secure post. This will leave approximately 3 inches of the wedge exposed.

UNIVERSAL ANCHOR SYSTEM INSTALLATION PROCEDURE
1. Dig foundation hole. Where solid rock is encountered at ground level, the foundation shall be a minimum depth of 18". When solid rock is encountered below ground level, the foundation shall extend in the solid rock a minimum depth of 18" or provide a minimum foundation depth of 30". If solid rock is encountered, the socket/stub may be reduced in length as required to a minimum length of 18". Any material removed from the socket/stub shall be from the bottom and the clearance requirements given on SMD(GEN) must be followed. The inner surfaces of the socket/stub must remain free of concrete or other debris.
2. Insert base post in hole to depths shown and backfill hole with concrete.
3. Level and plumb the base post using a torpedo level and allow concrete adequate time to set. The bottom of the slots provided in the stub pipe shall remain above the top of the concrete foundation.
4. Attach the sign to the sign post.
5. Install plastic insert around bottom of post.
6. Insert sign post into base post. Lower until the post comes to rest on steel rod.
7. Seat compression ring using a hammer. Typically, the top of compression ring will be approximately level with top of stub post when optimally installed.
8. Check sign post by hand to ensure it is unable to turn. If loose, increase the tightening of the compression ring.

Texas Department of Transportation — Traffic Operations Division

SIGN MOUNTING DETAILS
SMALL ROADSIDE SIGNS
WEDGE & UNIVERSAL ANCHOR
WITH THIN WALL TUBING POST

SMD(TWT)-08

© TxDOT July 2002	DN: TXDOT	CK: TXDOT	DW: TXDOT	CK: TXDOT
REVISIONS 9-08	CONT	SECT	JOB	HIGHWAY
	DIST	COUNTY		SHEET NO.

26E

DATE:
FILE:

TWO-WAY LEFT TURN LANES — PM(3)-20

DISCLAIMER: The use of this standard is governed by the "Texas Engineering Practice Act". No warranty of any kind is made by TxDOT for any purpose whatsoever. TxDOT assumes no responsibility for the conversion of this standard to other formats or for incorrect results or damages resulting from its use.

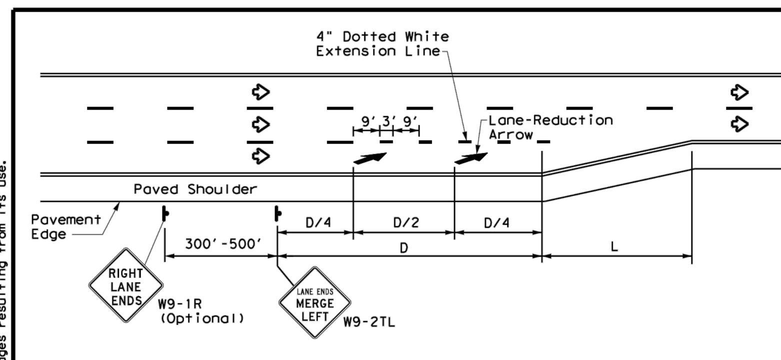

LANE REDUCTION

Posted Speed	D (ft)	L (ft)
30 MPH	460	$L = \frac{WS^2}{60}$
35 MPH	565	
40 MPH	670	
45 MPH	775	L=WS
50 MPH	885	
55 MPH	990	
60 MPH	1,100	
65 MPH	1,200	
70 MPH	1,250	
75 MPH	1,350	

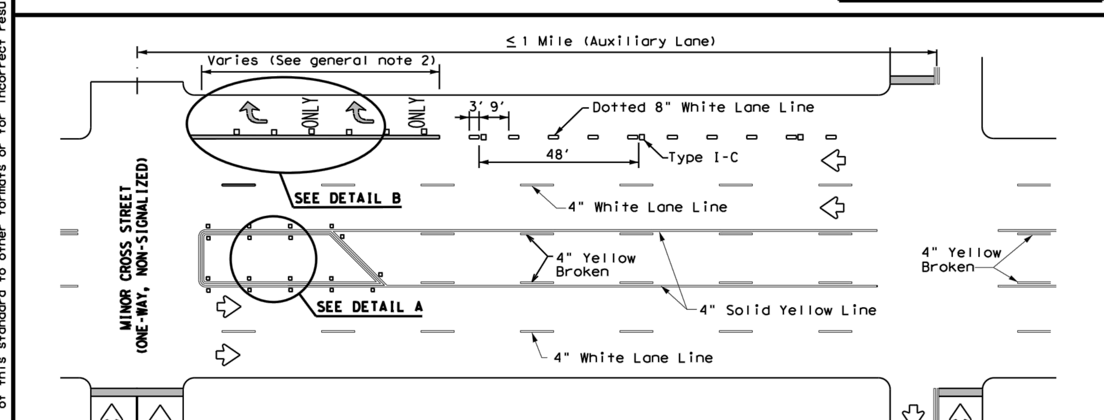

TYPICAL TWLTL AT ONE-WAY STREET AND RIGHT TURN AUXILIARY LANE

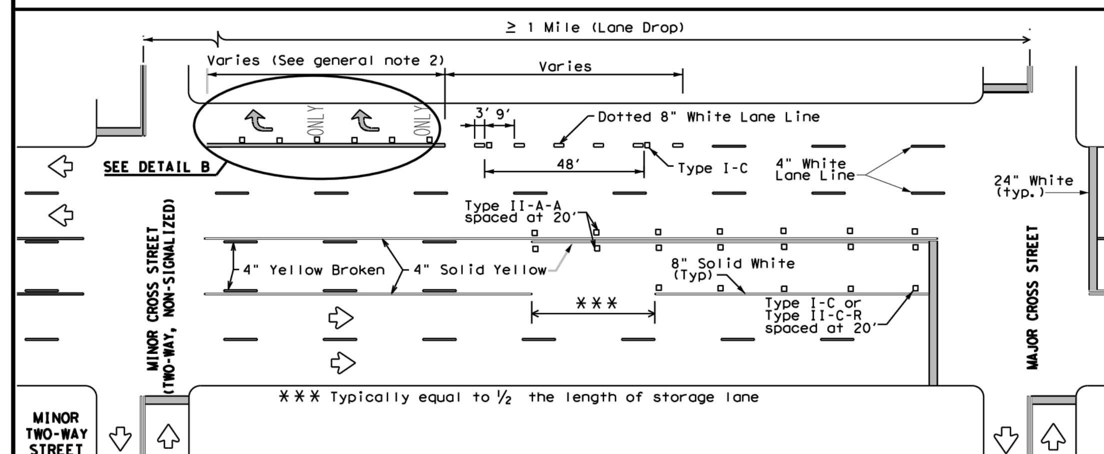

TYPICAL TWLTL AT TWO-WAY CROSS STREET AND RIGHT TURN LANE DROP

NOTES

1. Lane reduction pavement markings are used where the number of through lanes is reduced because of narrowing of the roadway or because of a section of on-street parking in what would otherwise be a through lane. For Texas Super 2 Passing Lanes, see TS2(PL) standard sheets.
2. On divided highways, an additional W9-1R "RIGHT LANE ENDS" sign may be installed in the median aligned with the W9-1R sign on the right side of the highway.
3. Lane reduction arrows are required for speeds of 45 mph or greater. An optional third lane reduction arrow may be added based on engineering judgement. If used, the optional third lane reduction arrow should be centered between the first and last lane reduction arrows.
4. For lane reductions on Freeways and Expressways, signing shall conform to the TxDOT Freeway Signing Handbook.

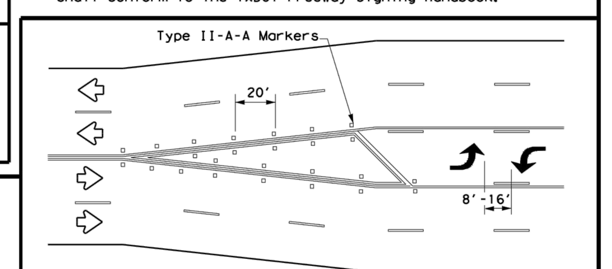

A two-way left-turn (TWLT) lane-use arrow pavement marking should be used at or just downstream from the beginning of a two-way left-turn lane within a corridor. Repeating the marking after each intersection or dedicated turn bay is not required unless stated elsewhere in the plans.

TYPICAL TRANSITION FOR TWLTL AND DIVIDED HIGHWAY

GENERAL NOTES

1. Lane use word and arrow markings shall be used where through lanes approaching an intersection become mandatory turn lanes. Lane use word and arrow markings should be used in auxiliary lanes of substantial length. Lane use arrow markings or word and arrow markings may be used in other lanes and turn bays for emphasis. Details for words and arrows are as shown in the Standard Highway Sign Designs for Texas.
2. When lane-use words and arrow markings are used, two sets of arrows should be used if the length of the bay is greater than 180 feet. When a single lane use arrow or word and arrow marking is used for a short turn lane, it should be located at or near the upstream end of the full-width turn lane.
3. Use raised pavement marker Type I-C with undivided highways, flush medians and two way left turn lanes. Use raised pavement marker Type II-C-R with divided highways and raised medians.
4. Length of turn bays, including taper, deceleration, and storage lengths shall be as shown on the plans or as directed by the Engineer.

MATERIAL SPECIFICATIONS	
PAVEMENT MARKERS (REFLECTORIZED)	DMS-4200
EPOXY AND ADHESIVES	DMS-6100
BITUMINOUS ADHESIVE FOR PAVEMENT MARKERS	DMS-6130
TRAFFIC PAINT	DMS-8200
HOT APPLIED THERMOPLASTIC	DMS-8220
PERMANENT PREFABRICATED PAVEMENT MARKINGS	DMS-8240

All pavement marking materials shall meet the required Departmental Material Specifications as specified by the plans.

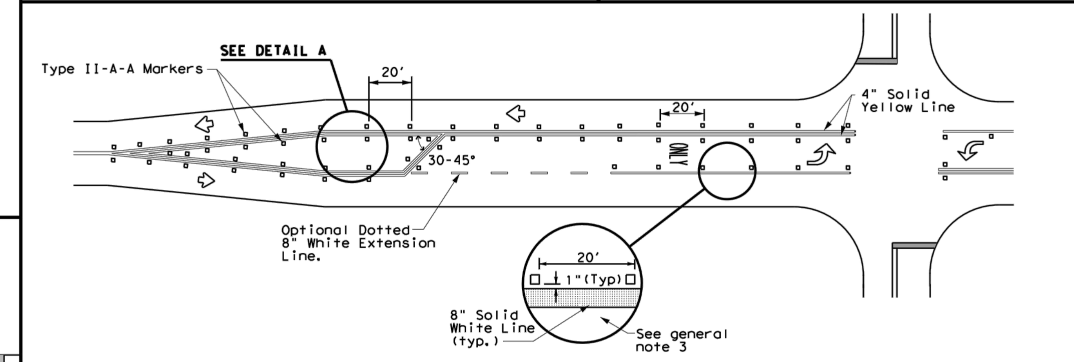

TYPICAL TWO-LANE HIGHWAY INTERSECTION WITH LEFT TURN BAYS

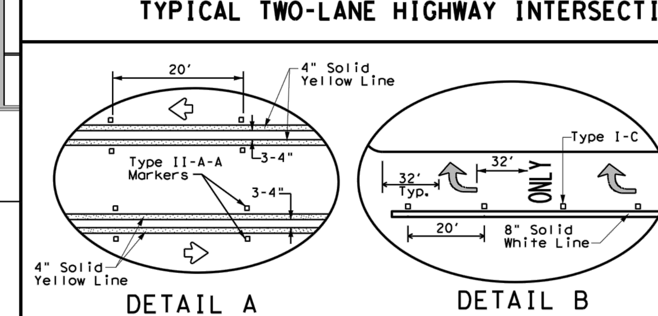

Texas Department of Transportation — Traffic Safety Division Standard

TWO-WAY LEFT TURN LANES, RURAL LEFT TURN BAYS, AND LANE REDUCTION PAVEMENT MARKINGS

PM(3)-20

FILE: pm3-20.dgn	DN:	CK:	DW:	CK:
© TxDOT April 1998	CONT	SECT	JOB	HIGHWAY
REVISIONS 5-00 2-10, 8-00 2-12, 3-03 6-20	DIST	COUNTY		SHEET NO.

22C

DATE:
FILE:

SIGN MOUNTING DETAILS — SMD(FRP)-08

DISCLAIMER: The use of this standard is governed by the "Texas Engineering Practice Act". No warranty of any kind is made by TxDOT for any purpose whatsoever. TxDOT assumes no responsibility for the conversion of this standard to other formats or for incorrect results or damages resulting from its use.

Universal Anchor System with Fiberglass Reinforced Plastic (FRP) Post

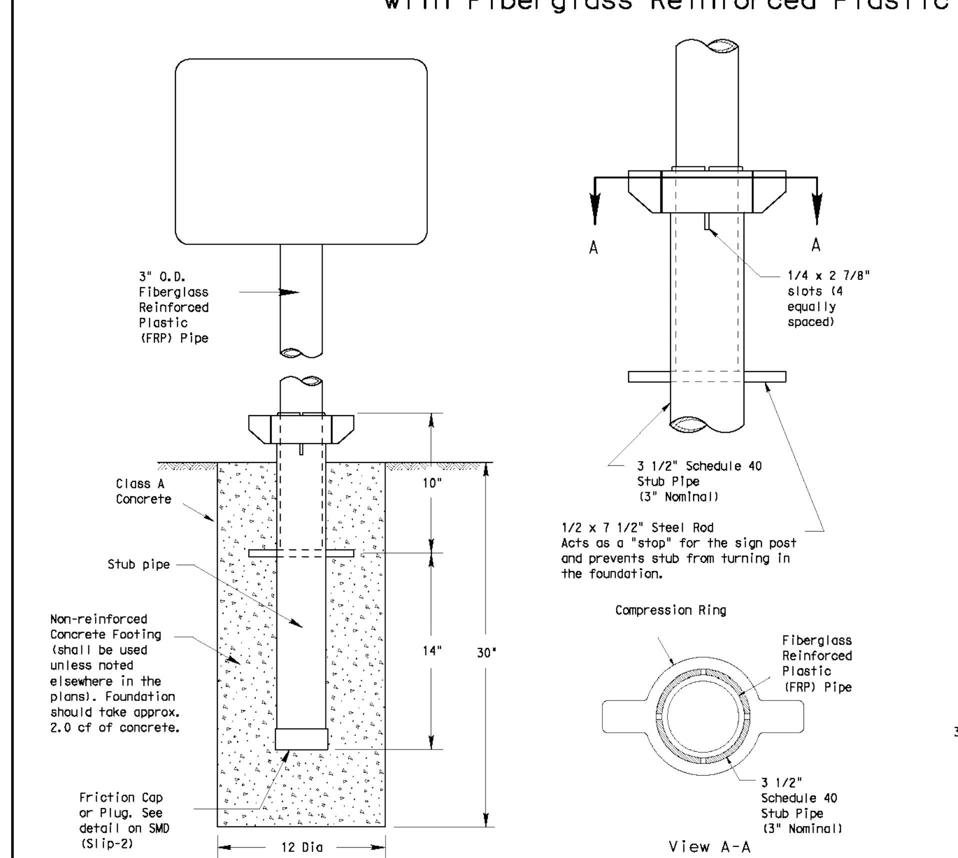

SM RD SGN ASSM TY FRP(X)UA(P)

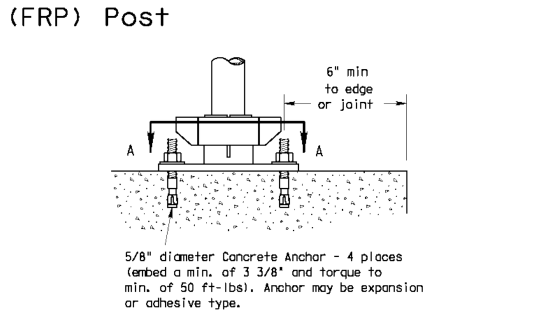

Concrete anchor consists of 5/8" diameter stud bolt with UNC series bolt threads on the upper end. A heavy hex nut per ASTM A563 and hardened washer per ASTM F436. The stud bolt shall have minimum yield and ultimate tensile strengths of 50 and 75 ksi, respectively. Nuts, bolts and washers shall be galvanized per Item 445, "Galvanizing." Top of bolt shall extend at least flush with top of nut when installed. The anchor, when installed in 4000 psi normal-weight concrete with a 3 3/8" minimum embedment, shall have a minimum allowable tension and shear of 2450 and 1525 psi, respectively. Adhesive type anchors shall have stud bolts installed with Type III epoxy per DMS-6100, "Epoxies and Adhesives." Adhesive anchors may be loaded after adequate epoxy cure time per the manufacturer's recommendations.

BOLT-DOWN DETAILS

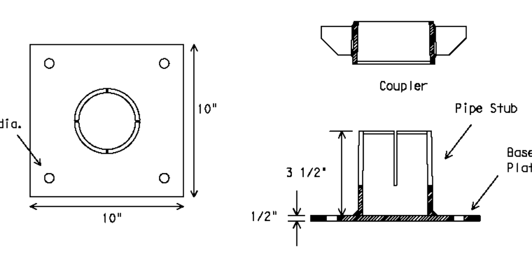

SM RD SGN ASSM TY FRP(X)UB(P)

Typical Sign Mounting Detail for FRP Support with Single Sign

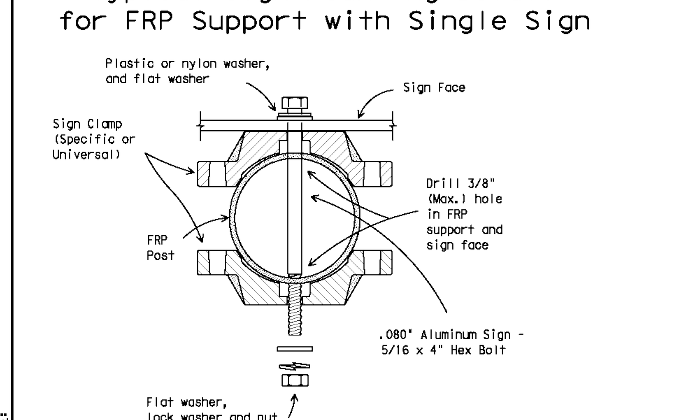

Typical Sign Mounting Detail for FRP Support with Back-to-Back Signs

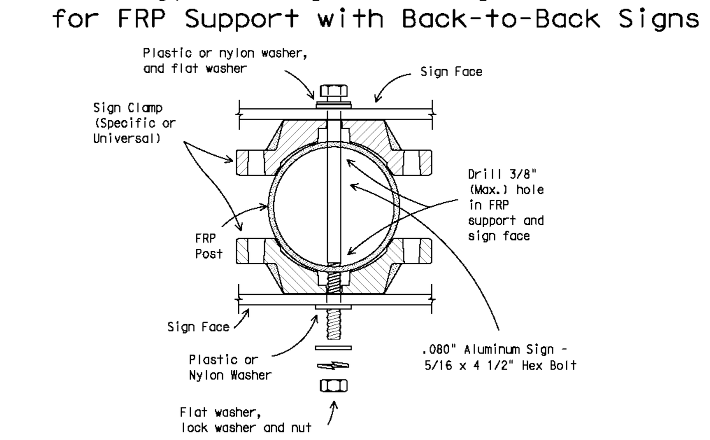

GENERAL NOTES:

1. FRP sign supports for a single type sign support may be used for signs up to and including 16 square feet. Dual post installation may be used for signs up to and including 32 square feet.
2. All nuts, bolts and washers shall be galvanized per Item 445, "Galvanizing."
3. See the Traffic Operations Division website for detailed drawings of sign clamps. The website address is: http://www.txdot.gov/publications/traffic.htm

FRP POST REQUIREMENTS

1. Materials shall conform to the requirements of Departmental Material Specification DMS-4410 and will be furnished in a yellow or gray color as specified elsewhere in the plans.
2. Thickness of FRP sign support is 0.125" + 0.031", - 0.0".
3. FRP sign supports are prequalified by the Traffic Operations Division. Prequalification procedures are obtained by writing:
   Texas Department of Transportation
   Traffic Operations Division
   125 East 11th Street
   Austin, Texas 78701-2483

UNIVERSAL ANCHOR SYSTEM INSTALLATION PROCEDURES

1. Dig foundation hole. Where solid rock is encountered at ground level, the foundation shall be a minimum depth of 18". When solid rock is encountered below ground level, the foundation shall extend in the solid rock a minimum depth of 18" or provide a minimum foundation depth of 30". If solid rock is encountered, the socket/stub may be reduced in length as required to a minimum length of 18'. Any material removed from the socket/stub shall be from the bottom and the clearance requirements given on SMD(GEN) must be followed. The inner surfaces of the socket/stub must remain free of concrete or other debris.
2. The Engineer may permit batches of concrete less than 2 cubic yards to be mixed with a portable, motor driven concrete mixer. For small placements less than 0.5 cubic yards, hand mixing in a suitable container may be allowed by Engineer. Concrete shall be Class A.
3. Insert base post in foundation hole to depths shown and fill hole with concrete. Cut base post from bottom and ensure a minimum of 18" embedment if installed in solid rock.
4. Level and plumb the base post with coupler using a torpedo level and let concrete set a minimum of 4 days, unless otherwise directed by Engineer. Bottom of base post slots shall be above the concrete footing.
5. Attach sign to FRP post.
6. Insert sign post into base post. Lower until the post comes to rest on the steel rod.
7. Use hammer to ensure the coupler is firmly seated. Top of coupler should be level with top of base post in most instances.
8. Check sign to ensure there is no twist. If loose, increase the tightening of coupler.

BOLT DOWN SIGN SUPPORT

1. Position base plate with coupler on existing concrete.
2. Drill holes into concrete and insert the 5/8" diameter bolts with wedge anchors, and tighten nuts.
3. Attach sign to FRP post.
4. Insert bottom of sign post into pipe stub.
5. Use hammer to ensure the coupler is firmly seated. Top of coupler should be level with top of base post in most instances.
6. Check sign to ensure there is no twist. If loose, increase the tightening of coupler.

Texas Department of Transportation — Traffic Operations Division

SIGN MOUNTING DETAILS
SMALL ROADSIDE SIGNS
UNIVERSAL ANCHOR SYSTEM
WITH FRP POST

SMD(FRP)-08

© TxDOT July 2002	DN: TXDOT	CK: TXDOT	DW: TXDOT	CK: TXDOT
REVISIONS 9-08	CONT	SECT	JOB	HIGHWAY
	DIST	COUNTY		SHEET NO.

26F

NO.	REVISION	DATE

STATE OF TEXAS — JON D. ADAME — 82567 — LICENSED PROFESSIONAL ENGINEER
Jon Adame 4-18-23

PAPE-DAWSON ENGINEERS
SAN ANTONIO | AUSTIN | HOUSTON | FORT WORTH | DALLAS
2000 NW LOOP 410 | SAN ANTONIO, TX 78213 | 210.375.9000
TEXAS ENGINEERING FIRM #470 | TEXAS SURVEYING FIRM #10028800

SMILEY TRACT UNIT 1
SAN ANTONIO, TEXAS

SIGNAGE DETAILS SHEET 2 OF 3

PLAT NO. 22-11800482
JOB NO. 11100-97
DATE APRIL 2023
DESIGNER AA
CHECKED VS DRAWN AA
SHEET C3.11

Date: Apr 18, 2023, 1:43pm User ID: aatry
File: P:\111\00\97\Design\Civil\SGDT-1110097.dwg

THIS DOCUMENT HAS BEEN PRODUCED FROM MATERIAL THAT WAS STORED AND/OR TRANSMITTED ELECTRONICALLY AND MAY HAVE BEEN INADVERTENTLY ALTERED. RELY ONLY ON FINAL HARDCOPY MATERIALS BEARING THE CONSULTANT'S ORIGINAL SIGNATURE AND SEAL. AERIAL IMAGERY PROVIDED BY GOOGLE© UNLESS OTHERWISE NOTED. Imagery © 2016,CAPCOG,Digital Globe,Texas Orthoimagery Program, USDA Farm Service Agency.

SEPTEMBER 2009

CITY OF SAN ANTONIO
DEPARTMENT OF PUBLIC WORKS
TRAFFIC ENGINEERING STANDARDS
STANDARD PAVEMENT MARKINGS
(WORDS)
SHEET 2 OF 16

% SUBMITTAL	PROJECT NO:	DATE:
DRAWN BY: LAG	DESIGN BY: R.B.V.	CHKD BY: M.E.	SHEET NO: OF

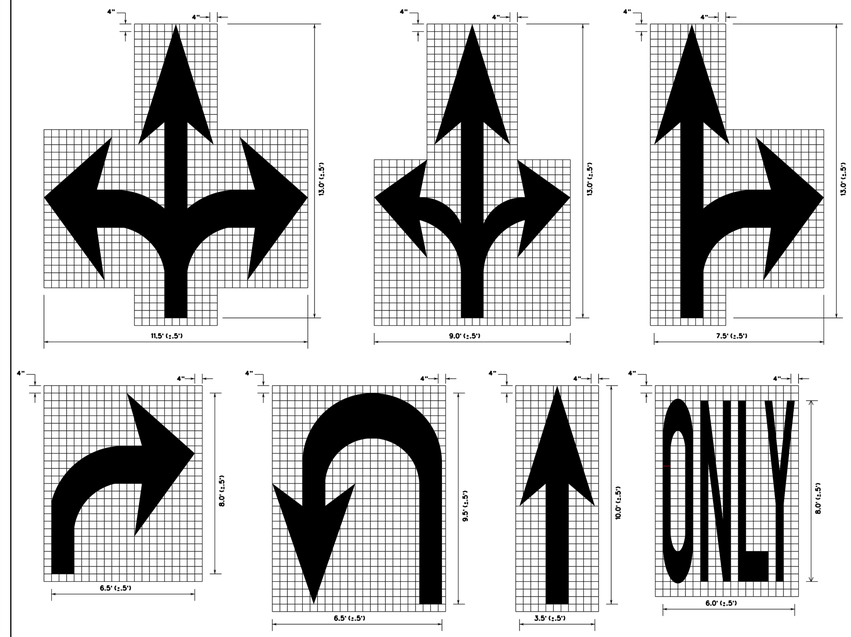

NOTES:

1. MINIMUM 8 FOOT WHITE MARKINGS SHALL BE USED, UNLESS OTHERWISE NOTED. IF MESSAGE CONSISTS OF MORE THAN ONE WORD, IT SHOULD BE PLACED WITH FIRST WORD NEAREST THE DRIVER.
2. THESE DETAILS ARE STANDARD SIZE FOR NORMAL INSTALLATION. SIZES MAY BE REDUCED APPROXIMATELY ONE-THIRD DEPENDING ON CONDITIONS.
3. THE LONGITUDINAL SPACE BETWEEN MARKINGS SHOULD BE 30 FEET.
4. MARKINGS CONSIDERED APPROPRIATE FOR USE WHEN WARRANTED INCLUDE THE FOLLOWING:
   A. REGULATORY
      STOP
      RIGHT (LEFT) TURN ONLY
      25 MPH
      SYMBOL ARROWS
   B. WARNING
      STOP AHEAD
      SIGNAL AHEAD
      SCHOOL
      SCHOOL X-ING
      PED X-ING
      R X R (SEE RCPM DETAIL)
      OTHER WORDS OR SYMBOLS MAY BE NECESSARY UNDER CERTAIN CONDITIONS
5. UNCONTROLLED USE OF PAVEMENT MARKINGS CAN RESULT IN DRIVER CONFUSION. WORD AND SYMBOL MARKINGS SHOULD BE NO MORE THAN THREE LINES.
6. THE WORD "STOP" SHALL NOT BE USED ON THE PAVEMENT UNLESS ACCOMPANIED BY A STOP LINE AND STOP SIGN. THE WORD "STOP" SHALL NOT BE PLACED ON THE PAVEMENT IN ADVANCE TO A STOP LINE, UNLESS EVERY VEHICLE IS REQUIRED TO STOP AT ALL TIMES.
7. PAVEMENT MARKINGS SHOULD GENERALLY BE NO MORE THAN ONE LANE IN WIDTH, WITH SCHOOL MESSAGES BEING THE EXCEPTION. FOR DETAILS OF SCHOOL AND SCHOOL CROSSING PAVEMENT MARKINGS, REFER TO PART VI OF THE "TEXAS MANUAL ON UNIFORM TRAFFIC CONTROL DEVICES".
8. SPACING BETWEEN LETTERS SHOULD BE APPROXIMATELY 4 INCHES. THE WIDTH OF LETTERS MAY VARY DEPENDING ON THE WIDTH OF THE TRAVEL LANES.
9. LANE-USE ARROW MARKINGS MAY BE USED TO CONVEY EITHER GUIDANCE OR MANDATORY MESSAGES. ARROWS USED TO CONVEY A MANDATORY MOVEMENT MUST BE ACCOMPANIED BY STANDARD SIGNS AND THE PAVEMENT MARKING WORD "ONLY".
10. PAVEMENT MARKINGS ARE TO BE LOCATED AS SPECIFIED ELSEWHERE IN THE PLANS.

SEPTEMBER 2009

CITY OF SAN ANTONIO
DEPARTMENT OF PUBLIC WORKS
TRAFFIC ENGINEERING STANDARDS
STANDARD PAVEMENT MARKINGS
(ARROWS)
SHEET 3 OF 16

% SUBMITTAL	PROJECT NO:	DATE:
DRAWN BY: LAG	DESIGN BY: R.B.V.	CHKD BY: M.E.	SHEET NO: OF

NO.	REVISION	DATE

STATE OF TEXAS
JON D. ADAME
82567
LICENSED
PROFESSIONAL ENGINEER
Jon Adame
4-18-23

PAPE-DAWSON ENGINEERS
SAN ANTONIO I AUSTIN I HOUSTON I FORT WORTH I DALLAS
2000 NW LOOP 410 I SAN ANTONIO, TX 78213 I 210.375.9000
TEXAS ENGINEERING FIRM #470 I TEXAS SURVEYING FIRM #10028800

SMILEY TRACT UNIT 1

SAN ANTONIO, TEXAS

SIGNAGE DETAILS SHEET 3 OF 3

PLAT NO. 22-11800482
JOB NO. 11100-97
DATE APRIL 2023
DESIGNER AA
CHECKED VS DRAWN AA
SHEET C3.12

Date: Apr 18, 2023, 1:43pm User ID: aatry
File: P:\111\00\97\Design\Civil\SSDT-110097.dwg

THIS DOCUMENT HAS BEEN PRODUCED FROM MATERIAL THAT WAS STORED AND/OR TRANSMITTED ELECTRONICALLY AND MAY HAVE BEEN INADVERTENTLY ALTERED. RELY ONLY ON FINAL HARDCOPY MATERIALS BEARING THE CONSULTANT'S ORIGINAL SIGNATURE AND SEAL. AERIAL IMAGERY PROVIDED BY GOOGLE© UNLESS OTHERWISE NOTED. Imagery © 2016,CAPCOG,Digital Globe,Texas Orthoimagery Program, USDA Farm Service Agency.

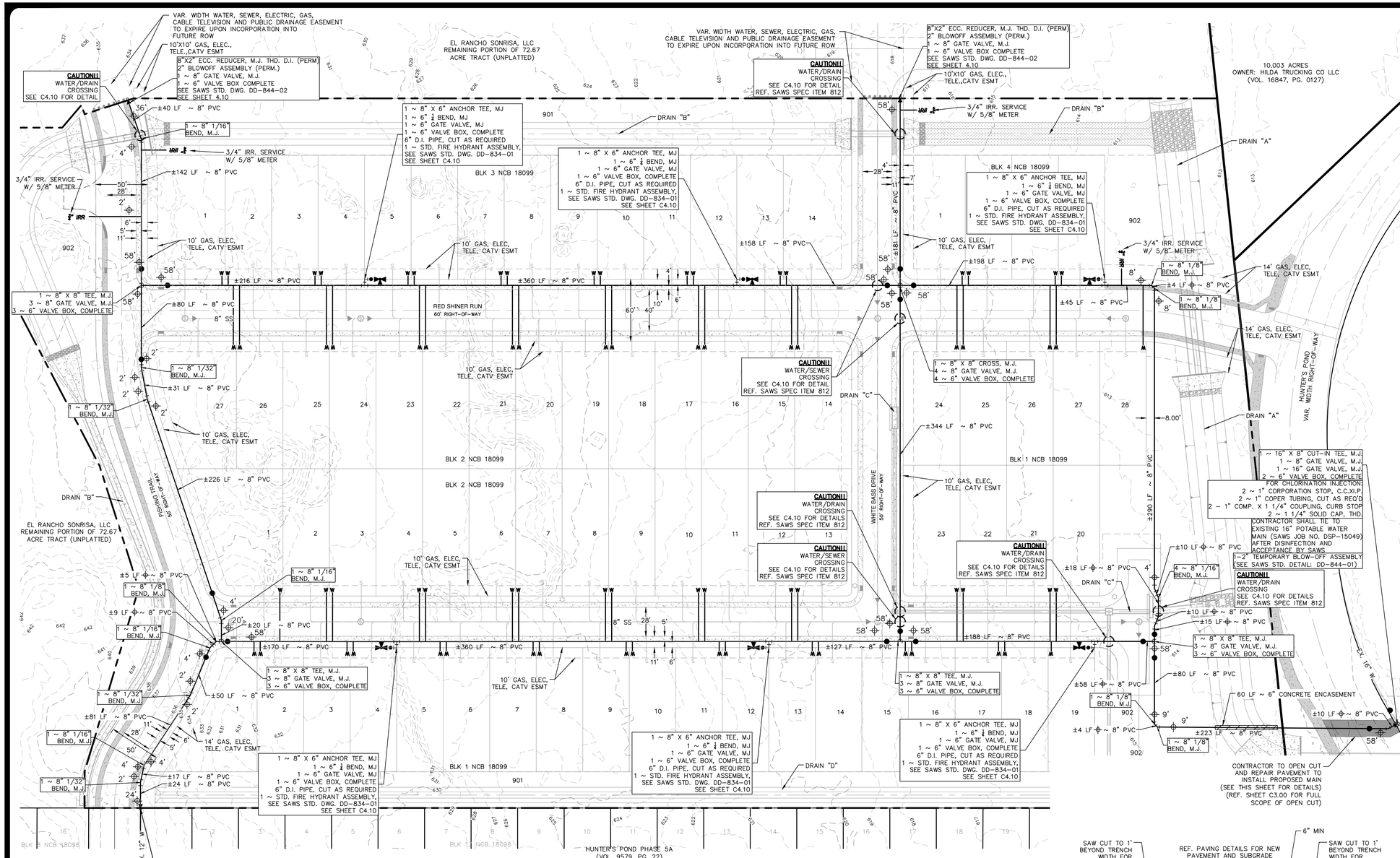

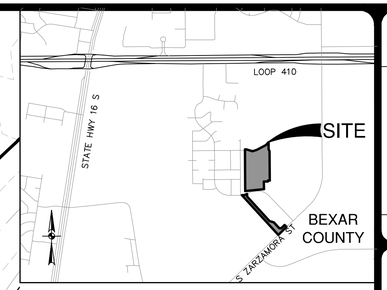

LOCATION MAP

NOT-TO-SCALE

SCALE: 1"= 50'

0' 50' 100' 150'

WATER LEGEND

- PROJECT LIMITS
- EXISTING WATER (FIRE HYDRANT)
- EXISTING SEWER (MANHOLE)
- PROPOSED SEWER
- PROPOSED WATER (FIRE HYDRANT)
- PROPOSED 3/4" SINGLE SERVICE WITH 5/8" METER
- SINGLE IRRIGATION SERVICE (REF. PLAN VIEW FOR SIZE) — IRR
- JOINT RESTRAINT
- UTILITY CROSSING
- PRESSURE REDUCING VALVE

PRESSURE REDUCING VALVE NOTE:

PRESSURE REDUCING VALVE TO BE INSTALLED ON CUSTOMER'S SIDE OF METER BY HOMEBUILDER.

PRESSURE NOTE:

CONTRACTOR TO VERIFY THAT NO PORTION OF THE TRACT IS BELOW GROUND ELEVATION OF 605 FEET WHERE THE STATIC PRESSURE WILL NORMALLY EXCEED 80 PSI. AT ALL SUCH LOCATIONS WHERE THE GROUND LEVEL IS BELOW 605 FEET, THE DEVELOPER OR BUILDER SHALL INSTALL AT EACH LOT, ON THE CUSTOMER'S SIDE OF THE METER, AN APPROVED TYPE PRESSURE REGULATOR IN CONFORMANCE WITH THE PLUMBING CODE OF THE CITY OF SAN ANTONIO. NO DUAL SERVICES ALLOWED FOR ANY LOT(S) IF *PRV IS/ARE REQUIRED FOR SUCH LOT(S), ONLY SINGLE SERVICE CONNECTIONS SHALL BE ALLOWED.
*NOTE: A PRESSURE REGULATOR IS ALSO KNOWN AS A PRESSURE REDUCING VALVE (PRV).

JOINT RESTRAINT NOTE:

CONTRACTOR SHALL INSTALL RETAINER GLANDS AT ALL FITTINGS AND PROVIDE JOINT RESTRAINING HARNESSES OR FIELD LOCK GASKETS AT ALL JOINTS WITHIN THE LENGTH SHOWN. CONTRACTOR SHALL INSURE THAT ALL TEES, BENDS, VALVES, ETC. HAVE A MINIMUM OF 5 FT OF PIPE WITH NO JOINTS ON EACH SIDE OF THE FITTING. JOINT RESTRAINTS AND RETAINER GLANDS SHALL BE CALCULATED BY SAWS APPROVED PROGRAMS. THERE WILL BE NO SEPARATE PAY ITEM FOR RETAINER GLANDS AND OTHER JOINT RESTRAINING HARNESSES AND GASKETS, BUT SHALL BE SUBSIDIARY TO THE UNIT COST PER LINEAL FOOT OF PIPE INSTALLED.

TRENCH EXCAVATION SAFETY PROTECTION:

CONTRACTOR AND/ OR CONTRACTOR'S INDEPENDENTLY RETAINED EMPLOYEE OR STRUCTURAL DESIGN/ GEOTECHNICAL/ SAFETY/EQUIPMENT CONSULTANT, IF ANY, SHALL REVIEW THESE PLANS AND ANY AVAILABLE GEOTECHNICAL INFORMATION AND THE ANTICIPATED INSTALLATION SITES WITHIN THE PROJECT WORK AREA IN ORDER TO IMPLEMENT CONTRACTOR'S TRENCH EXCAVATION SAFETY PROTECTION SYSTEMS, PROGRAMS AND /OR PROCEDURES FOR THE PROJECT DESCRIBED IN THE CONTRACT DOCUMENTS. THE CONTRACTOR'S IMPLEMENTATION OF THESE SYSTEMS, PROGRAMS AND/OR PROCEDURES SHALL PROVIDE FOR ADEQUATE TRENCH EXCAVATION SAFETY PROTECTION THAT COMPLY WITH AS A MINIMUM, OSHA STANDARDS FOR TRENCH EXCAVATIONS. SPECIFICALLY, CONTRACTOR AND/OR CONTRACTOR'S INDEPENDENTLY RETAINED EMPLOYEE OR SAFETY CONSULTANT SHALL IMPLEMENT A TRENCH SAFETY PROGRAM IN ACCORDANCE WITH OSHA STANDARDS GOVERNING THE PRESENCE AND ACTIVITIES OF INDIVIDUALS WORKING IN AND AROUND TRENCH EXCAVATION.

WATER (SAWS PRESSURE ZONE 790 HGL)

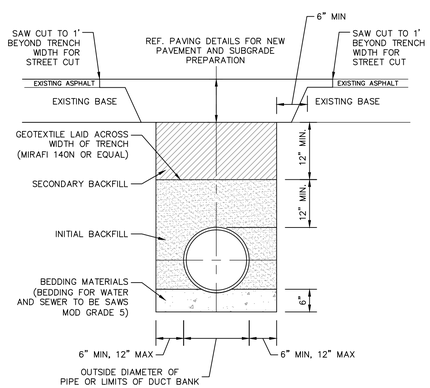

UTILITY & STORM DRAINAGE TRENCH

NOT-TO-SCALE

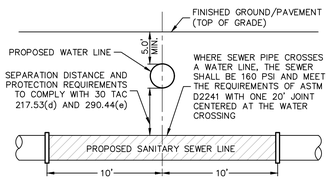

TYPICAL SANITARY SEWER/WATER CROSSING DETAIL

NOT-TO-SCALE

FIRE FLOW NOTE:

IN AN EFFORT TO MEET THE CITY OF SAN ANTONIO'S FIRE FLOW REQUIREMENTS FOR THE PROPOSED RESIDENTIAL DEVELOPMENT, THE PUBLIC WATER MAIN SYSTEM HAS BEEN DESIGNED FOR A MINIMUM FIRE FLOW DEMAND OF 1000 GPM AT 25 PSI RESIDUAL PRESSURE. THE FIRE FLOW REQUIREMENTS FOR INDIVIDUAL STRUCTURES WILL BE REVIEWED DURING THE BUILDING PERMIT PROCESS IN ACCORDANCE WITH THE PROCEDURES SET FORTH BY THE CITY OF SAN ANTONIO DIRECTOR OF DEVELOPMENT SERVICES DEPARTMENT AND THE SAN ANTONIO FIRE DEPARTMENT FIRE MARSHAL.

ROW PERMIT NOTE:

A CITY OF SAN ANTONIO PERMIT MUST BE OBTAINED BEFORE WORKING IN SAN ANTONIO RIGHTS-OF-WAY.

DEVELOPER'S NAME: EL RANCHO SONRISA, LLC
ADDRESS: 8626 JODHPUR
CITY: FAIR OAKS RANCH STATE: TEXAS ZIP: 78015
PHONE# (210) 381-9813 FAX#
SAWS BLOCK MAP# 14-6536, 14-6538, 14-8536 & 14-6538 TOTAL ACREAGE 18.19
TOTAL LINEAR FOOTAGE OF PIPE: 8"-3,794 LF PLAT NO. 22-11800482
NUMBER OF LOTS 73 SAWS JOB NO. 22-1192

NO.	REVISION	DATE

STATE OF TEXAS — JON D. ADAME — 82567 — LICENSED PROFESSIONAL ENGINEER
10-5-23

PAPE-DAWSON ENGINEERS
SAN ANTONIO I AUSTIN I HOUSTON I FORT WORTH I DALLAS
2000 NW LOOP 410 I SAN ANTONIO, TX 78213 I 210.375.9000
TEXAS ENGINEERING FIRM #470 I TEXAS SURVEYING FIRM #10028800

SMILEY TRACT UNIT 1
SAN ANTONIO, TEXAS

OVERALL WATER DISTRIBUTION PLAN

PLAT NO. 22-11800482
JOB NO. 11100-97
DATE AUGUST 2023
DESIGNER AA
CHECKED VS DRAWN AA
SHEET C4.00

Date: Dec 05, 2023, 1:26pm User ID: adamja
File: P:\111\00\97\Design\Civil\WTOA-11100977.dwg

THIS DOCUMENT HAS BEEN PRODUCED FROM MATERIAL THAT WAS STORED AND/OR TRANSMITTED ELECTRONICALLY AND MAY HAVE BEEN INADVERTENTLY ALTERED. RELY ONLY ON FINAL HARDCOPY MATERIALS BEARING THE CONSULTANT'S ORIGINAL SIGNATURE AND SEAL. AERIAL IMAGERY PROVIDED BY GOOGLE© UNLESS OTHERWISE NOTED. Imagery © 2016,CAPCOG,Digital Globe,Texas Orthoimagery Program, USDA Farm Service Agency.

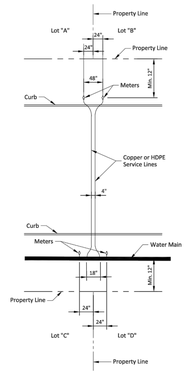

SINGLE SERVICE LINE - SINGLE METER

PROPERTY OF		APPROVED	REVISED
SAN ANTONIO WATER SYSTEM SAN ANTONIO, TEXAS	TYPICAL NEW DEVELOPMENT SERVICE ARRANGEMENT	March 2008	December 2018
		DD-824-05	SHEET 1 OF 1

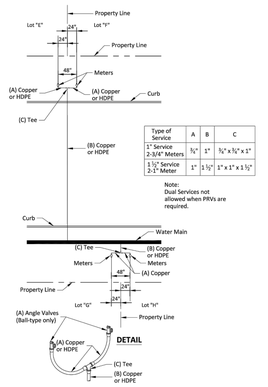

Type of Service	A	B	C
1" Service 2-3/4" Meters	¾"	1"	¾" x ¾" x 1"
1½" Service 2-1" Meter	1"	1½"	1" x 1" x 1½"

Note:
Dual Services not allowed when PRVs are required.

SINGLE SERVICE LINE - DUAL METER

PROPERTY OF		APPROVED	REVISED
SAN ANTONIO WATER SYSTEM SAN ANTONIO, TEXAS	TYPICAL SERVICE ARRANGEMENT	March 2008	December 2018
		DD-824-05	SHEET 1 OF 1

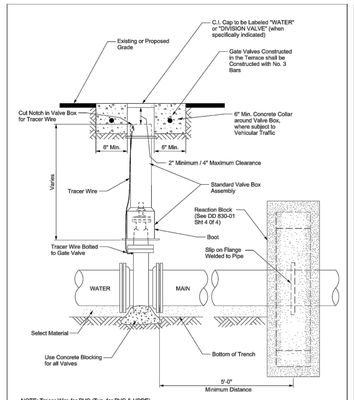

NOTE: Tracer Wire for PVC (Typ. for PVC & HDPE)
NOTE: All Concrete to be 3,000 psi

Note: For all work associated with Recycled Water Valves, refer to DD 110-10, Sht. 1 of 1

PROPERTY OF		APPROVED	REVISED
SAN ANTONIO WATER SYSTEM SAN ANTONIO, TEXAS	INSTALLATION OF NON-GEARED GATE VALVE WITH VALVE BOX AND EXTENSION	MARCH 2008	AUG 2019
		DD 828-01	SHEET 1 OF 1

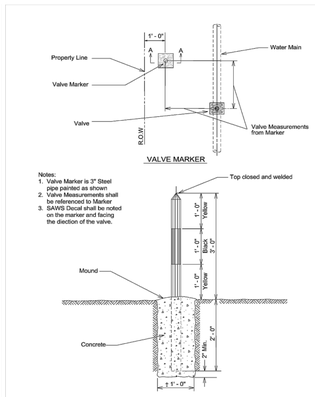

Notes:
1. Valve Marker is 3" Steel pipe painted as shown
2. Valve Measurements shall be referenced to Marker
3. SAWS Decal shall be noted on the manner and facing the direction of the valve.

PROPERTY OF		APPROVED	REVISED
SAN ANTONIO WATER SYSTEM SAN ANTONIO, TEXAS	VALVE MARKER	MARCH 2008	AUG 2019
		DD-828-04	SHEET 1 OF 1

NOTE:
User:
(A) Anchoring Tee with M.J. Fitting or M.J. Valve
(B) Std. M.J. Tee with Anchoring Coupling or Anchoring Fitting
NOTE:
Polywrap Below Ground

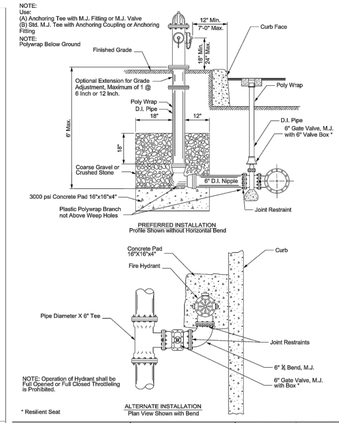

PROPERTY OF		APPROVED	REVISED
SAN ANTONIO WATER SYSTEM SAN ANTONIO, TEXAS	FIRE HYDRANT INSTALLATION (JOINT RESTRAINT)	MAY 2013	AUG 2019
		DD-834-01	SHEET 1 OF 3

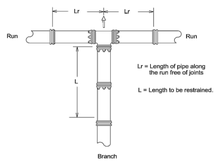

Lr = Length of pipe along the run free of joints

L = Length to be restrained.

RESTRAINED LENGTH FOR TEES

PIPE SIZE (inch)	BRANCH SIZE (inch)	LENGTH OF RUN (ft.)	RESTRAINED LENGTH IN FEET, WHEN TEST PRESSURE = 200 psi	RESTRAINED LENGTH IN FEET, WHEN TEST PRESSURE = 150 psi
6	4	0	42	31
6	4	5	7	1
6	4	10	7	1
6	6	0	59	44
6	6	5	35	20
6	6	10	11	1
8	4	0	42	31
8	4	5	1	1
8	6	0	59	44
8	6	5	28	13
8	6	10	1	1
8	8	0	77	58
8	8	5	53	34
8	8	10	30	11
8	8	15	6	1

RESTRAINED LENGTH DESIGN

Restrained length calculations are for P.V.C pipe bedded in compacted granular material extending to the top of the pipe.The native soil material is assumed to be inorganic clay of high plasticity. Depth of bury is assumed to be 4 feet.

Note:
These calculations are provided for reference. The restrained length shall be designed based upon the conditions encountered during the installation.

PROPERTY OF		APPROVED	REVISED
SAN ANTONIO WATER SYSTEM SAN ANTONIO, TEXAS	RESTRAINED LENGTHS FOR TEES	March 2008	AUG 2019
		DD-839-04	SHEET 1 OF 2

L=LENGTH TO BE RESTRAINED

PIPE SIZE (inch)	RESTRAINED LENGTH IN FEET, WHEN TEST PRESSURE = 200 psi	RESTRAINED LENGTH IN FEET, WHEN TEST PRESSURE = 150 psi
6	59	44
8	77	58
10	93	69
12	109	82

RESTRAINED LENGTH DESIGN

Restrained length calculations are for P.V.C. pipe bedded in compacted granular material extending to the top of the pipe. The native soil material is assumed to be inorganic clay of high plasticity. Depth of bury is assumed to be 4 feet.

Note:
These calculations are provide for reference. The restrained length shall be designed based upon the conditions encountered during the installation.

PROPERTY OF		APPROVED	REVISED
SAN ANTONIO WATER SYSTEM SAN ANTONIO, TEXAS	RESTRAINED LENGTHS FOR DEAD ENDS / INLINE VALVES	MARCH 2008	AUG 2019
		DD-839-05	SHEET 1 OF 1

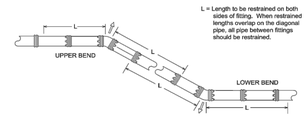

L = Length to be restrained on both sides of fitting. When restrained lengths overlap on the diagonal pipe, all pipe between fittings should be restrained.

PIPE SIZE (inch)	BEND ANGLE (deg.)	LOW SIDE DEPTH	UPPER BEND RESTRAINED LENGTH IN FEET TEST PRESSURE = 200 psi	LOWER BEND RESTRAINED LENGTH IN FEET TEST PRESSURE = 200 psi	UPPER BEND RESTRAINED LENGTH IN FEET TEST PRESSURE = 150 psi	LOWER BEND RESTRAINED LENGTH IN FEET TEST PRESSURE = 150 psi
6	45	5	8	2	6	1
6	22.5	5	12	4	9	3
6	11.25	5	6	2	4	1
6	45	10	24	5	18	4
6	22.5	10	12	2	9	2
6	11.25	10	6	1	4	1
8	45	5	32	11	24	8
8	22.5	5	15	5	11	4
8	11.25	5	8	3	6	2
8	45	10	32	7	24	5
8	22.5	10	15	3	11	2
8	11.25	10	8	2	6	1
12	45	5	45	16	34	12
12	22.5	5	22	7	16	6
12	11.25	5	11	4	8	3
12	45	10	45	10	34	7
12	22.5	10	22	5	16	3
12	11.25	10	11	2	8	2

RESTRAINED LENGTH DESIGN

Restrained length calculations are for P.V.C. pipe bedded in compacted granular material extending to the top of the pipe. The native soil material is assumed to be inorganic clay of high plasticity. Depth of bury is assumed to be 4 feet.

Note:
These calculations are provided for reference. The restrained length shall be designed based upon the conditions encountered during the installation.

PROPERTY OF		APPROVED	REVISED
SAN ANTONIO WATER SYSTEM SAN ANTONIO, TEXAS	RESTRAINED LENGTHS VERTICAL OFFSETS	MARCH 2008	AUG 2019
		DD-839-06	SHEET 1 OF 1

L=Length to be restrained

PIPE SIZE (inch)	ELL SIZE (inch)	RESTRAINED LENGTH IN FEET, WHEN TEST PRESSURE = 200 psi	RESTRAINED LENGTH IN FEET, WHEN TEST PRESSURE = 150 psi
6	4	30	23
6	6	55	42
6	8	30	24
12	4	80	60
12	6	80	60
12	8	58	43

RESTRAINED LENGTH DESIGN

Restrained length calculations are for P.V.C. pipe bedded in compacted granular material extending to the top of the pipe. The native soil material is assumed to be inorganic clay of high plasticity. Depth of bury is assumed to be 4 feet.

Note:
These calculations are provided for reference. Th restrained length shall be designed based upon the conditions encountered during the installation.

PROPERTY OF		APPROVED	REVISED
SAN ANTONIO WATER SYSTEM SAN ANTONIO, TEXAS	RESTRAINED LENGTHS FOR REDUCERS	MARCH 2008	AUG 2019
		DD-839-07	SHEET 1 OF 1

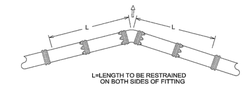

L=LENGTH TO BE RESTRAINED ON BOTH SIDES OF FITTING

PIPE SIZE (inch)	BEND ANGLE (deg.)	RESTRAINED LENGTH IN FEET, WHEN TEST PRESSURE = 200 psi	RESTRAINED LENGTH IN FEET, WHEN TEST PRESSURE = 150 psi
6	90	23	17
6	45	9	7
6	22.5	5	3
6	11.25	2	2
8	90	30	22
8	45	12	9
8	22.5	6	4
8	11.25	3	2
12	90	43	32
12	45	16	12
12	22.5	8	5
12	11.25	4	3

RESTRAINED LENGTH DESIGN

Restrained length calculations are for P.V.C pipe bedded in compacted granular material extending to the top of the pipe. The native soil material is assumed to be inorganic clay of high plasticity. Depth of bury is assumed to be 4 feet.

Note:
These calculations are provided for reference. The restrained length shall be designed based upon the conditions encountered during the installation.

PROPERTY OF		APPROVED	REVISED
SAN ANTONIO WATER SYSTEM SAN ANTONIO, TEXAS	RESTRAINED LENGTHS FOR HORIZONTAL BENDS	MARCH 2008	AUG 2019
		DD-839-08	SHEET 1 OF 1

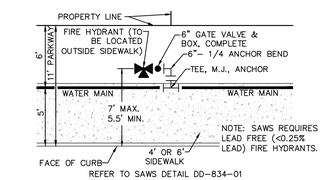

FIRE HYDRANT INSTALLATION

NOT–TO–SCALE

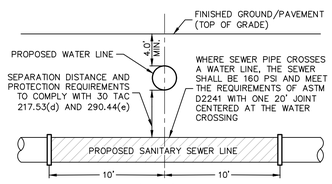

TYPICAL SANITARY SEWER/WATER CROSSING DETAIL

NOT–TO–SCALE

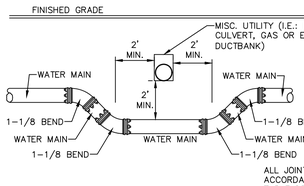

ALL JOINTS ARE FULLY RESTRAINED IN ACCORDANCE WITH SAWS SPECIFICATION TABLE DD–839–06.

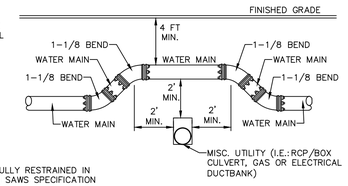

TYPICAL UTILITY/WATER CROSSING DETAIL

NOT–TO–SCALE

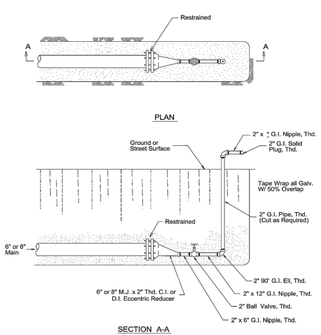

* Cut as required to extend beyond excavation

PROPERTY OF		APPROVED	REVISED
SAN ANTONIO WATER SYSTEM SAN ANTONIO, TEXAS	2" TEMPORARY BLOW-OFF ASSEMBLY ON 6" & 8" MAINS	MARCH 2008	AUG 2019
		DD-844-01	SHEET 1 OF 4

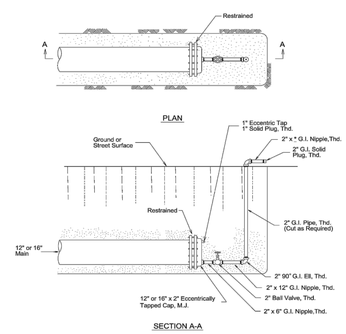

* Cut as required to extend beyond excavation.

PROPERTY OF		APPROVED	REVISED
SAN ANTONIO WATER SYSTEM SAN ANTONIO, TEXAS	2" TEMPORARY BLOW-OFF ASSEMBLY ON 12" & 16" MAINS	March 2008	AUG 2019
		DD-844-01	SHEET 2 OF 4

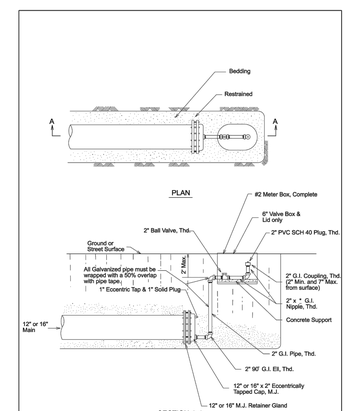

* Cut to fit in meter box.

PROPERTY OF		APPROVED	REVISED
SAN ANTONIO WATER SYSTEM SAN ANTONIO, TEXAS	2" PERMANENT BLOW-OFF ASSEMBLY ON 12" & 16" MAINS	MARCH 2008	APRIL 2014
		DD-844-02	SHEET 1 OF 5

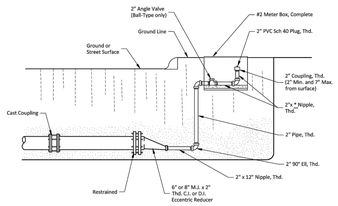

* Cut to fit in meter box

PROPERTY OF		APPROVED	REVISED
SAN ANTONIO WATER SYSTEM SAN ANTONIO, TEXAS	2" PERMANENT BLOW-OFF ASSEMBLY ON 6" & 8" MAINS	MARCH 2008	AUG 2019
		DD-844-02	SHEET 3 OF 5

WATER (SAWS PRESSURE ZONE 790 HGL)

DEVELOPER'S NAME: EL RANCHO SONRISA, LLC
ADDRESS: 8626 JODHPUR
CITY: SAN ANTONIO STATE: TEXAS ZIP: 78015
PHONE# (210) 381–9813 FAX#
SAWS BLOCK MAP# 14–6536, 14–6538, 14–6536 & 14–6536, TOTAL EDU'S 77 TOTAL ACREAGE 18.19
TOTAL LINEAR FOOTAGE OF PIPE: 8"–3,796 LF PLAT NO. 22–11800482
NUMBER OF LOTS 73 SAWS JOB NO. 22–1192

NO.	REVISION	DATE

STATE OF TEXAS
JON D. ADAME
82567
LICENSED
PROFESSIONAL ENGINEER
4-12-23

PAPE-DAWSON ENGINEERS
SAN ANTONIO I AUSTIN I HOUSTON I FORT WORTH I DALLAS
2000 NW LOOP 410 I SAN ANTONIO, TX 78213 I 210.375.9000
TEXAS ENGINEERING FIRM #470 I TEXAS SURVEYING FIRM #10028800

SMILEY TRACT UNIT 1
SAN ANTONIO, TEXAS
WATER DISTRIBUTION PLAN DETAILS

PLAT NO. 22-11800482
JOB NO. 11100–97
DATE APRIL 2023
DESIGNER AA
CHECKED VS DRAWN AA
SHEET C4.10

Date: Apr 12, 2023, 9:09am User ID: ostry
File: P:\111\00\97\Design\Civil\WTDT-110097.dwg

THIS DOCUMENT HAS BEEN PRODUCED FROM MATERIAL THAT WAS STORED AND/OR TRANSMITTED ELECTRONICALLY AND MAY HAVE BEEN INADVERTENTLY ALTERED. RELY ONLY ON FINAL HARDCOPY MATERIALS BEARING THE CONSULTANT'S ORIGINAL SIGNATURE AND SEAL. AERIAL IMAGERY PROVIDED BY GOOGLE© UNLESS OTHERWISE NOTED. Imagery © 2016,CAPCOG,Digital Globe,Texas Orthoimagery Program, USDA Farm Service Agency.

SAWS CONSTRUCTION NOTES

(LAST REVISED JANUARY 2022)

SAWS GENERAL SECTION

1. ALL MATERIALS AND CONSTRUCTION PROCEDURES WITHIN THE SCOPE OF THIS CONTRACT SHALL BE APPROVED BY THE SAN ANTONIO WATER SYSTEM (SAWS) AND COMPLY WITH THE PLANS, SPECIFICATIONS, GENERAL CONDITIONS AND WITH THE FOLLOWING AS APPLICABLE:

   A. CURRENT TEXAS COMMISSION ON ENVIRONMENTAL QUALITY (TCEQ) "DESIGN CRITERIA FOR DOMESTIC WASTEWATER SYSTEM", TEXAS ADMINISTRATIVE CODE (TAC) TITLE 30 PART 1 CHAPTER 217 AND "PUBLIC DRINKING WATER"; TAC TITLE 30 PART 1 CHAPTER 290.
   B. CURRENT TXDOT "STANDARD SPECIFICATIONS FOR CONSTRUCTION OF HIGHWAYS, STREETS AND DRAINAGE".
   C. CURRENT "SAN ANTONIO WATER SYSTEM STANDARD SPECIFICATIONS FOR WATER AND SANITARY SEWER CONSTRUCTION";
   D. CURRENT CITY OF SAN ANTONIO "STANDARD SPECIFICATIONS FOR PUBLIC WORKS CONSTRUCTION";
   E. CURRENT CITY OF SAN ANTONIO "UTILITY EXCAVATION CRITERIA MANUAL" (UECM).

2. THE CONTRACTOR SHALL NOT PROCEED WITH ANY PIPE INSTALLATION WORK UNTIL THEY OBTAIN A COPY OF THE APPROVED COUNTER PERMIT OR GENERAL CONSTRUCTION PERMIT (GCP) FROM THE CONSULTANT AND HAS BEEN NOTIFIED BY SAWS CONSTRUCTION INSPECTION DIVISION TO PROCEED WITH THE WORK AND HAS ARRANGED A MEETING WITH THE INSPECTOR AND CONSULTANT FOR THE WORK REQUIREMENTS. WORK COMPLETED BY THE CONTRACTOR WITHOUT AN APPROVED COUNTER PERMIT AND/OR A GCP WILL BE SUBJECT TO REMOVAL AND REPLACEMENT AT THE EXPENSE OF THE CONTRACTORS AND/OR THE DEVELOPER.

3. THE CONTRACTOR SHALL OBTAIN THE SAWS STANDARD DETAILS FROM THE SAWS WEBSITE, HTTP://WWW.SAWS.ORG/BUSINESS_CENTER/SPECS. UNLESS OTHERWISE NOTED WITHIN THE DESIGN PLANS.

4. THE CONTRACTOR IS TO MAKE ARRANGEMENTS WITH THE SAWS CONSTRUCTION INSPECTION DIVISION AT
   (210) 233-2973, ON NOTIFICATION PROCEDURES THAT WILL BE USED TO NOTIFY AFFECTED HOME RESIDENTS AND/OR PROPERTY OWNERS 48 HOURS PRIOR TO BEGINNING ANY WORK.

5. LOCATION AND DEPTH OF EXISTING UTILITIES AND SERVICE LATERALS SHOWN ON THE PLANS ARE UNDERSTOOD TO BE APPROXIMATE. ACTUAL LOCATIONS AND DEPTHS MUST BE FIELD VERIFIED BY THE CONTRACTOR AT LEAST 1 WEEK PRIOR TO CONSTRUCTION. IT SHALL BE THE CONTRACTOR'S RESPONSIBILITY TO LOCATE UTILITY SERVICE LINES AS REQUIRED FOR CONSTRUCTION AND TO PROTECT THEM DURING CONSTRUCTION AT NO COST TO SAWS.

6. THE CONTRACTOR SHALL VERIFY THE EXACT LOCATION OF UNDERGROUND UTILITIES AND DRAINAGE STRUCTURES AT LEAST 1-2 WEEKS PRIOR TO CONSTRUCTION WHETHER SHOWN ON PLANS OR NOT. PLEASE ALLOW UP TO 7 BUSINESS DAYS FOR LOCATES REQUESTING PIPE LOCATION MARKERS ON SAWS FACILITIES. THE FOLLOWING CONTACT INFORMATION ARE SUPPLIED FOR VERIFICATION PURPOSES:

   - SAWS UTILITY LOCATES: HTTP://WWW.SAWS.ORG/SERVICE/LOCATES
   - COSA DRAINAGE (210) 207-0724 OR (210) 207-6026
   - COSA TRAFFIC SIGNAL OPERATIONS (210) 206-8480
   - COSA TRAFFIC SIGNAL DAMAGES (210) 207-3951
   - TEXAS STATE WIDE ONE CALL LOCATOR 1-800-545-6005 OR 811

7. THE CONTRACTOR SHALL BE RESPONSIBLE FOR RESTORING EXISTING FENCES, CURBS, STREETS, DRIVEWAYS, SIDEWALKS, LANDSCAPING AND STRUCTURES TO ITS ORIGINAL OR BETTER CONDITION IF DAMAGES ARE MADE AS A RESULT OF THE PROJECT'S CONSTRUCTION.

8. ALL WORK IN TEXAS DEPARTMENT OF TRANSPORTATION (TXDOT) AND/OR BEXAR COUNTY RIGHT-OF-WAY SHALL BE DONE IN ACCORDANCE WITH RESPECTIVE CONSTRUCTION SPECIFICATIONS AND PERMIT REQUIREMENTS.

9. THE CONTRACTOR SHALL COMPLY WITH CITY OF SAN ANTONIO OR OTHER GOVERNING MUNICIPALITY'S TREE ORDINANCES WHEN EXCAVATING NEAR TREES.

10. THE CONTRACTOR SHALL NOT PLACE ANY WASTE MATERIALS IN THE 100-YEAR FLOOD PLAIN WITHOUT FIRST OBTAINING AN APPROVED FLOOD PLAIN PERMIT.

    HOLIDAY WORK: CONTRACTORS WILL NOT BE ALLOWED TO PERFORM SAWS WORK ON SAWS RECOGNIZED HOLIDAYS. REQUEST SHOULD BE SENT TO CONSTWORKREQ@SAWS.ORG.

    WEEKEND WORK: CONTRACTORS ARE REQUIRED TO NOTIFY THE SAWS INSPECTION CONSTRUCTION DEPARTMENT 48 HOURS IN ADVANCE TO REQUEST WEEKEND WORK. REQUEST SHOULD BE SENT TO CONSTWORKREQ@SAWS.ORG.

11. ANY AND ALL SAWS UTILITY WORK INSTALLED WITHOUT HOLIDAY/WEEKEND APPROVAL WILL BE SUBJECT TO BE UNCOVERED FOR PROPER INSPECTION.

12. COMPACTION NOTE (ITEM 804): THE CONTRACTOR SHALL BE RESPONSIBLE FOR MEETING THE COMPACTION REQUIREMENTS ON ALL TRENCH BACKFILL AND FOR PAYING FOR THE TESTS PERFORMED BY A THIRD PARTY. COMPACTION TESTS WILL BE DONE AT ONE LOCATION POINT RANDOMLY SELECTED, OR AS INDICATED BY THE SAWS INSPECTOR AND/OR THE TEST ADMINISTRATOR, PER EACH 12-INCH LOOSE LIFT PER 400 LINEAR FEET AT A MINIMUM. THIS PROJECT WILL NOT BE ACCEPTED AND FINALIZED BY SAWS WITHOUT THIS REQUIREMENT BEING MET AND VERIFIED BY PROVIDING ALL NECESSARY DOCUMENTED TEST RESULTS.

13. A COPY OF ALL TESTING REPORTS SHALL BE FORWARDED TO SAWS CONSTRUCTION INSPECTION DIVISION.

SAWS WATER NOTES

1. PRIOR TO TIE-INS, ANY SHUTDOWNS OF EXISTING MAINS OF ANY SIZE MUST BE COORDINATED WITH THE SAWS CONSTRUCTION INSPECTION DIVISION AT LEAST ONE WEEK IN ADVANCE OF THE SHUTDOWN. THE CONTRACTOR MUST ALSO PROVIDE A SEQUENCE OF WORK AS RELATED TO THE TIE-INS; THIS IS AT NO ADDITIONAL COST TO SAWS OR THE PROJECT AND IT IS THE RESPONSIBILITY OF THE CONTRACTOR TO SEQUENCE THE WORK ACCORDINGLY.

   - FOR WATER MAINS 12" OR HIGHER: SAWS EMERGENCY OPERATIONS CENTER (210) 233-2014

2. ASBESTOS CEMENT (AC) PIPE, ALSO KNOWN AS TRANSITE PIPE WHICH IS KNOWN TO CONTAIN ASBESTOS- CONTAINING MATERIAL (ACM), MAY BE LOCATED WITHIN THE PROJECT LIMITS. SPECIAL WASTE MANAGEMENT PROCEDURES AND HEALTH AND SAFETY REQUIREMENTS WILL BE APPLICABLE WHEN REMOVAL AND/OR DISTURBANCE OF THIS PIPE OCCURS. SUCH WORK IS TO BE MADE UNDER SPECIAL SPECIFICATION ITEM NO. 3000, "SPECIAL SPECIFICATION FOR HANDLING ASBESTOS CEMENT PIPE".

3. VALVE REMOVAL: WHERE THE CONTRACTOR IS TO ABANDON A WATER MAIN, THE CONTROL VALVE LOCATED ON THE ABANDONING BRANCH WILL BE REMOVED AND REPLACED WITH A CAP/PLUG. (NSPI)

4. SUITABLE ANCHORAGE/THRUST BLOCKING OR JOINT RESTRAINT SHALL BE PROVIDED AT ALL OF THE FOLLOWING MAIN LOCATIONS: DEAD ENDS, PLUGS, CAPS, TEES, CROSSES, VALVES, AND BENDS, IN ACCORDANCE WITH THE STANDARD DRAWINGS DD-839 SERIES AND ITEM NO. 839, IN THE SAWS STANDARD SPECIFICATIONS FOR CONSTRUCTION.

5. ALL VALVES SHALL READ "OPEN RIGHT".

6. PRVS REQUIRED: CONTRACTOR TO VERIFY THAT NO PORTION OF THE TRACT IS BELOW GROUND ELEVATION OF 605 FEET WHERE THE STATIC PRESSURE WILL NORMALLY EXCEED 80 PSI. AT ALL SUCH LOCATIONS WHERE THE GROUND LEVEL IS BELOW 605 FEET, THE DEVELOPER OR BUILDER SHALL INSTALL AT EACH LOT, ON THE CUSTOMER'S SIDE OF THE METER, AN APPROVED TYPE PRESSURE REGULATOR IN CONFORMANCE WITH THE PLUMBING CODE OF THE CITY OF SAN ANTONIO. NO DUAL SERVICES ALLOWED FOR ANY LOT(S) IF *PRV IS/ARE REQUIRED FOR SUCH LOT(S), ONLY SINGLE SERVICE CONNECTIONS SHALL BE ALLOWED. *NOTE: A PRESSURE REGULATOR IS ALSO KNOWN AS A PRESSURE REDUCING VALVE (PRV).

7. PIPE DISINFECTION WITH DRY HTH FOR PROJECTS LESS THAN 800 LINEAR FEET. (ITEM NO. 847.3): MAINS SHALL BE DISINFECTED WITH DRY HTH WHERE SHOWN IN THE CONTRACT DOCUMENTS OR AS DIRECTED BY THE INSPECTOR, AND SHALL NOT EXCEED A TOTAL LENGTH OF 800 FEET. THIS METHOD OF DISINFECTION WILL ALSO BE FOLLOWED FOR MAIN REPAIRS. THE CONTRACTOR SHALL UTILIZE ALL APPROPRIATE SAFETY MEASURE TO PROTECT HIS PERSONNEL DURING DISINFECTION OPERATIONS.

8. BACKFLOW PREVENTION DEVICES:

   - ALL IRRIGATION SERVICES WITHIN RESIDENTIAL AREAS ARE REQUIRED TO HAVE BACKFLOW PREVENTION DEVICES.
   - ALL COMMERCIAL BACKFLOW PREVENTION DEVICES MUST BE APPROVED BY SAWS PRIOR TO INSTALLATION.

9. FINAL CONNECTION TO THE EXISTING WATER MAIN SHALL NOT BE MADE UNTIL THE WATER MAIN HAS BEEN PRESSURE TESTED, CHLORINATED, AND SAWS HAS RELEASED THE MAIN FOR TIE-IN AND USE.

10. DIVISION VALVES: DIVISION VALVES SHOWN ON PLANS OR NOT SHOWN ON PLANS BUT FOUND IN THE FIELD SHALL ONLY BE OPERATED BY SAWS DISTRIBUTION AND COLLECTION STAFF AND ONLY WITH PRIOR WRITTEN APPROVAL OF THE SAWS DIRECTOR OF PRODUCTION AND OPERATIONS AND PROPER COORDINATION WITH ALL SAWS DEPARTMENTS. CONTRACTOR SHALL PROVIDE WRITTEN NOTIFICATION TO THE INSPECTOR A MINIMUM OF TWO WEEKS IN ADVANCE TO START THE COORDINATION PROCESS AND WILL BE INFORMED BY THE INSPECTOR WHEN THE DIVISION VALVE WILL BE OPERATED BY THE SAWS DISTRIBUTION AND COLLECTION STAFF. THE DIVISION VALVE CAN ONLY BE OPERATED BY SAWS DISTRIBUTION AND COLLECTION STAFF MEMBER NOT THE INSPECTOR OR THE CONTRACTOR. OPERATION OF A DIVISION VALVE WITHOUT THE EXPRESS PRIOR WRITTEN APPROVAL OF THE SAWS DISTRIBUTION AND COLLECTION STAFF WILL CONSTITUTE A MATERIAL BREACH OF ANY WRITTEN SAWS CONTRACT OR PERMIT IN ADDITION TO SUBJECTING THE CONTRACTOR TO LIABILITY FOR ANY AND ALL FINES, FEES, OR OTHER DAMAGES, DIRECT OR CONSEQUENTIAL, THAT MAY ARISE FROM OR BE CAUSED BY THE OPERATION OF THE VALVE WITHOUT PRIOR WRITTEN PERMISSION. PLEASE BE INFORMED THAT THE APPROVAL OF THE OPERATION OR OPENING OR CLOSING OF A DIVISION VALVE CAN TAKE SEVERAL WEEKS FOR APPROVAL. DIVISION VALVES WILL ALSO HAVE A VALVE LID LABELED DIVISION VALVE AND A LOCKING MECHANISM INSTALLED WITH A KEY. THE LOCK AND KEY MECHANISM WILL BE PAID FOR BY THE CONTRACTOR BUT WILL BE INSTALLED BY SAWS DISTRIBUTION AND COLLECTION STAFF.

PROJECT WATER NOTES

1. MACHINE CHLORINATION BY THE S.A.W.S.

2. ALL 8", 12" AND 16" PIPE SHALL BE P.V.C. C-900 CLASS 235 DR 18.

3. ALL MAINS SHALL BE HYDROSTATICALLY TESTED BY THE CONTRACTOR, AS PROVIDED FOR IN THE SPECIAL CONDITIONS.

4. THE WATER LINES WILL BE SET FROM THE STREET HUBS BEFORE THIS CONTRACT BEGINS. STREET CUT SHEETS WILL BE SUPPLIED TO THE CONTRACTOR. THERE SHOULD BE NO ADDITIONAL STAKES REQUIRED, AND IT SHALL BE THE CONTRACTOR'S RESPONSIBILITY TO INSPECT THE SITE AND VERIFY THAT ALL STAKES REQUIRED FOR HIS WORK ARE IN PLACE AT THE TIME THE CONSTRUCTION BEGINS. IF ANY STAKES ARE MISSING THE ENGINEER SHOULD BE NOTIFIED IMMEDIATELY. AFTER CONSTRUCTION BEGINS, ALL CONSTRUCTION STAKES, MARKS, ETC., SHALL BE CAREFULLY PRESERVED BY THE CONTRACTOR, AND IN CASE OF DESTRUCTION OR REMOVAL BY THE CONTRACTOR, HIS EMPLOYEE OR ANY OTHER MEANS, SUCH STAKES, MARKS, ETC., SHALL BE REPLACED AT THE CONTRACTOR'S EXPENSE.

5. THE CONTRACTOR SHALL FURNISH THE ENGINEER WITH ALL THE FINAL MEASUREMENTS, TAPS AND LENGTH OF SERVICE CONNECTIONS.

6. THE LOT CORNERS WILL BE SET BY THE ENGINEER FOR INSTALLATION OF ALL WATER SERVICES. THESE LOT CORNERS SHALL BE CAREFULLY PRESERVED BY THE CONTRACTOR SO THE METER BOXES CAN BE SET IN PHASE II. ANY LOT CORNER DESTROYED OR REMOVED BY THE CONTRACTOR, HIS EMPLOYEES, OR BY ANY OTHER MEANS SHALL BE REPLACED AT THE CONTRACTOR'S EXPENSE.

7. STREETS WILL HAVE BEEN EXCAVATED DOWN TO SUBGRADE AND THE PARKWAY WILL BE CUT DOWN TO TOP OF CURB BY THE STREET CONTRACTOR, PRIOR TO CONSTRUCTION OF THE WATER MAINS. IT WILL BE THE UTILITY CONTRACTOR'S RESPONSIBILITY TO PROVIDE A PAD FOR HIS EQUIPMENT.

8. WATER METER BOXES IF APPLICABLE SHALL BE INSTALLED NINE FEET FROM FACE OF CURB TO CENTER OF THE METER BOX.

9. ALL GARBAGE OR SPOIL MATERIAL FROM THIS WORK SHALL BE REMOVED FROM THE SITE BY THE CONTRACTOR, AT HIS EXPENSE.

10. FINAL CONNECTION TO THE EXISTING WATER MAIN SHALL NOT BE MADE UNTIL WATER MAIN HAS BEEN PRESSURE TESTED, CHLORINATED AND THE S.A.W.S. RELEASES THE MAIN FOR TIE-IN AND USE.

11. UNIT PRICE BID FOR "STANDARD FIRE HYDRANT ASSEMBLY" SHALL INCLUDE FIRE HYDRANT, 6-INCH GATE VALVE AND 6-INCH VALVE BOX COMPLETE, ANCHOR BEND, AND ALL 6-INCH DI PIPE REQUIRED (DI PIPE REQUIRED SHALL INCLUDE ALL PIPE FROM THE TEE ON THE MAIN LINE TO THE FIRE HYDRANT).

12. WHEN SEWER LINES ARE INSTALLED IN THE VICINITY OF WATER MAINS, SUCH INSTALLATION SHALL BE IN STRICT ACCORDANCE WITH THE TEXAS NATURAL RESOURCE CONSERVATION COMMISSION "RULES AND REGULATIONS FOR PUBLIC WATER SYSTEMS" (1988 OR ANY REVISIONS THERETO).

13. A CLEAR SPACE SHALL BE PROVIDED AROUND ALL FIRE HYDRANTS. THIS AREA SHOULD HAVE A MINIMUM DIAMETER OF 3.0' AND BE CLEAN OF VERTICAL OBSTRUCTIONS, VALVES, AND METER BOXES.

14. SAWS REQUIRES LEAD FREE (< 0.25%) FIRE HYDRANTS.

15. UNLESS OTHERWISE NOTED ALL SERVICES SHALL BE 3/4" WITH 5/8" METER.

WATER (SAWS PRESSURE ZONE 790 HGL)

DEVELOPER'S NAME: EL RANCHO SONRISA, LLC
ADDRESS: 8626 JODHPUR
CITY: SAN ANTONIO STATE: TEXAS ZIP: 78015
PHONE# (210) 381-9813 FAX#
SAWS BLOCK MAP# 14-6536, 14-6538, 14-6536 & 14-6538 TOTAL EDU'S 77 TOTAL ACREAGE 18.19
TOTAL LINEAR FOOTAGE OF PIPE: 8"-3,796 LF PLAT NO. 22-11800482
NUMBER OF LOTS 73 SAWS JOB NO. 22-1192

NO.	REVISION	DATE

STATE OF TEXAS
JON D. ADAME
82567
LICENSED
PROFESSIONAL ENGINEER
4-12-23

PAPE-DAWSON ENGINEERS
SAN ANTONIO I AUSTIN I HOUSTON I FORT WORTH I DALLAS
2000 NW LOOP 410 I SAN ANTONIO, TX 78213 I 210.375.9000
TEXAS ENGINEERING FIRM #470 I TEXAS SURVEYING FIRM #10028800

SMILEY TRACT UNIT 1

SAN ANTONIO, TEXAS

WATER DISTRIBUTION PLAN NOTES

PLAT NO. 22-11800482
JOB NO. 11100-97
DATE APRIL 2023
DESIGNER AA
CHECKED VS DRAWN AA
SHEET C4.11

Date: Apr 12, 2023, 9:09am User ID: oatry
File: P:\11\00\97\Design\Civil\WTDT-1110097.dwg

THIS DOCUMENT HAS BEEN PRODUCED FROM MATERIAL THAT WAS STORED AND/OR TRANSMITTED ELECTRONICALLY AND MAY HAVE BEEN INADVERTENTLY ALTERED. RELY ONLY ON FINAL HARDCOPY MATERIALS BEARING THE CONSULTANT'S ORIGINAL SIGNATURE AND SEAL. AERIAL IMAGERY PROVIDED BY GOOGLEO UNLESS OTHERWISE NOTED. Imagery © 2016,CAPCOG,Digital Globe,Texas Orthoimagery Program, USDA Farm Service Agency.

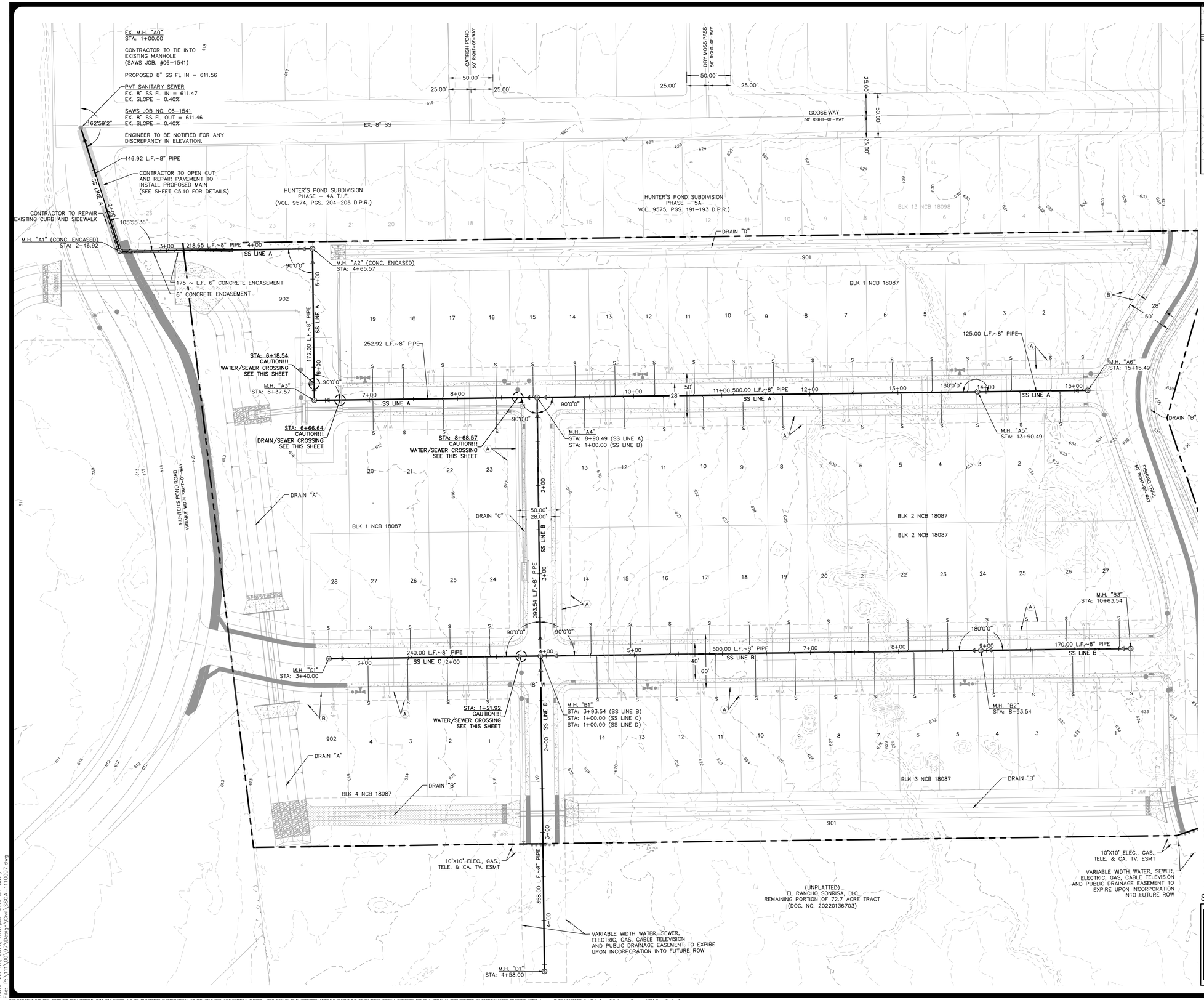

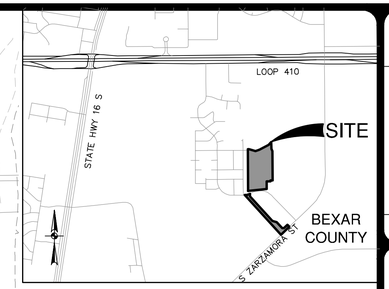

LOCATION MAP

NOT-TO-SCALE

SCALE: 1" = 50'

0' 50' 100' 150'

SEWER LEGEND

PROJECT LIMITS
EXISTING WATER
EXISTING SEWER
PROPOSED SEWER
PROPOSED WATER
PROPOSED SEWER LATERAL
MANHOLE
FIRE HYDRANT

KEY LEGEND

(A) 10' ELEC., GAS, TELE., & CA. T.V. EASEMENT

(B) 14' ELEC., GAS, TELE., & CA. T.V. EASEMENT

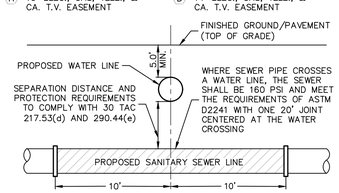

TYPICAL SANITARY SEWER/WATER CROSSING DETAIL

NOT-TO-SCALE

CAUTION!!

CONTRACTOR SHALL BE REQUIRED TO LOCATE ALL PUBLIC OR PRIVATE UTILITIES INCLUDING BUT NOT LIMITING TO: WATER, SEWER, TELEPHONE AND FIBER OPTIC LINES, SITE LIGHTING ELECTRIC, SECONDARY ELECTRIC, PRIMARY ELECTRICAL DUCTBANKS, LANDSCAPE IRRIGATION FACILITIES, AND GAS LINES. ANY UTILITY CONFLICTS THAT ARISE SHOULD BE COMMUNICATED TO THE ENGINEER IMMEDIATELY AND PRIOR TO CONSTRUCTION. THE CONTRACTOR SHALL CONTACT 1-800-DIG-TESS A MINIMUM OF 48 HOURS PRIOR TO THE START OF CONSTRUCTION. ANY DAMAGE TO EXISTING UTILITIES SHALL BE THE SOLE RESPONSIBILITY OF THE CONTRACTOR AND THE REPAIR SHALL BE AT CONTRACTOR'S SOLE EXPENSE WHETHER THE UTILITY IS SHOWN ON THESE PLANS OR NOT.

FINISHED FLOOR NOTES:

1. THE FINISHED FLOOR ELEVATIONS (FF) REPRESENT THE MINIMUM POSSIBLE FLOOR ELEVATION TO PROVIDE SANITARY SEWER SERVICE TO EACH LOT. ACTUAL FINISHED FLOOR ELEVATIONS FOR EACH LOT ARE TO BE DETERMINED BY THE BUILDER AND SHALL TAKE INTO CONSIDERATION AS-BUILT CONDITIONS FOR FOUND SEWER SERVICES AND ACTUAL LATERAL PLACEMENT. IT IS THE BUILDER'S SOLE RESPONSIBILITY TO DETERMINE ACTUAL FINISHED FLOOR ELEVATIONS FOR EACH LOT PRIOR TO THE START OF HOME FOUNDATION CONSTRUCTION TAKING INTO CONSIDERATION SITE DRAINAGE, STREET ACCESS AND SANITARY SEWER SERVICE ELEVATIONS.
2. THE MINIMUM SANITARY SEWER LATERAL GRADES WERE BASED UPON THE MINIMUM FINISHED FLOOR ELEVATIONS FOR THE LOTS LOCATED ON THE DOWNHILL SIDES OF THE PROPOSED ROADWAYS.

ROW PERMIT NOTE:

A CITY OF SAN ANTONIO PERMIT MUST BE OBTAINED BEFORE WORKING IN SAN ANTONIO RIGHTS-OF-WAY.

TRENCH EXCAVATION SAFETY PROTECTION:

CONTRACTOR AND/ OR CONTRACTOR'S INDEPENDENTLY RETAINED EMPLOYEE OR STRUCTURAL DESIGN/ GEOTECHNICAL/ SAFETY/EQUIPMENT CONSULTANT, IF ANY, SHALL REVIEW THESE PLANS AND ANY AVAILABLE GEOTECHNICAL INFORMATION AND THE ANTICIPATED INSTALLATION SITES WITHIN THE PROJECT WORK AREA IN ORDER TO IMPLEMENT CONTRACTOR'S TRENCH EXCAVATION SAFETY PROTECTION SYSTEMS, PROGRAMS AND /OR PROCEDURES FOR THE PROJECT DESCRIBED IN THE CONTRACT DOCUMENTS. THE CONTRACTOR'S IMPLEMENTATION OF THESE SYSTEMS, PROGRAMS AND/OR PROCEDURES SHALL PROVIDE FOR ADEQUATE TRENCH EXCAVATION SAFETY PROTECTION THAT COMPLY WITH AS A MINIMUM, OSHA STANDARDS FOR TRENCH EXCAVATIONS. SPECIFICALLY, CONTRACTOR AND/OR CONTRACTOR'S INDEPENDENTLY RETAINED EMPLOYEE OR SAFETY CONSULTANT SHALL IMPLEMENT A TRENCH SAFETY PROGRAM IN ACCORDANCE WITH OSHA STANDARDS GOVERNING THE PRESENCE AND ACTIVITIES OF INDIVIDUALS WORKING IN AND AROUND TRENCH EXCAVATION.

SEWER

DEVELOPER'S NAME: EL RANCHO SONRISA, LLC
ADDRESS: 8626 JODHPUR
CITY: FAIR OAKS RANCH STATE: TX ZIP: 78015
PHONE# (210) 381-9813 FAX#
SAWS BLOCK MAP# 146538 & 145586 & 146536 TOTAL EDU'S 73 TOTAL ACREAGE 18.19
TOTAL LINEAR FOOTAGE OF PIPE: 8" - 2977 LF PLAT NO. 22-11800482
NUMBER OF LOTS 73 SAWS JOB NO. 22-1688

NO.	REVISION	DATE

STATE OF TEXAS
JON D. ADAME
82567
LICENSED PROFESSIONAL ENGINEER
3-30-23

PAPE-DAWSON ENGINEERS
SAN ANTONIO I AUSTIN I HOUSTON I FORT WORTH I DALLAS
2000 NW LOOP 410 I SAN ANTONIO, TX 78213 I 210.375.9000
TEXAS ENGINEERING FIRM #470 I TEXAS SURVEYING FIRM #10028800

SMILEY TRACT UNIT 1

SAN ANTONIO, TEXAS

OVERALL SANITARY SEWER PLAN

PLAT NO. 22-11800482
JOB NO. 11100-97
DATE MARCH 2023
DESIGNER AA
CHECKED VS DRAWN JW
SHEET C5.00

Date: Mar 30, 2023, 5:07pm User ID: oatry
File: P:\111\00\97\Design\Civil\SSOA-1100097.dwg

THIS DOCUMENT HAS BEEN PRODUCED FROM MATERIAL THAT WAS STORED AND/OR TRANSMITTED ELECTRONICALLY AND MAY HAVE BEEN INADVERTENTLY ALTERED. RELY ONLY ON FINAL HARDCOPY MATERIALS BEARING THE CONSULTANT'S ORIGINAL SIGNATURE AND SEAL. AERIAL IMAGERY PROVIDED BY GOOGLE© UNLESS OTHERWISE NOTED. Imagery © 2016,CAPCOG,Digital Globe,Texas Orthoimagery Program, USDA Farm Service Agency.

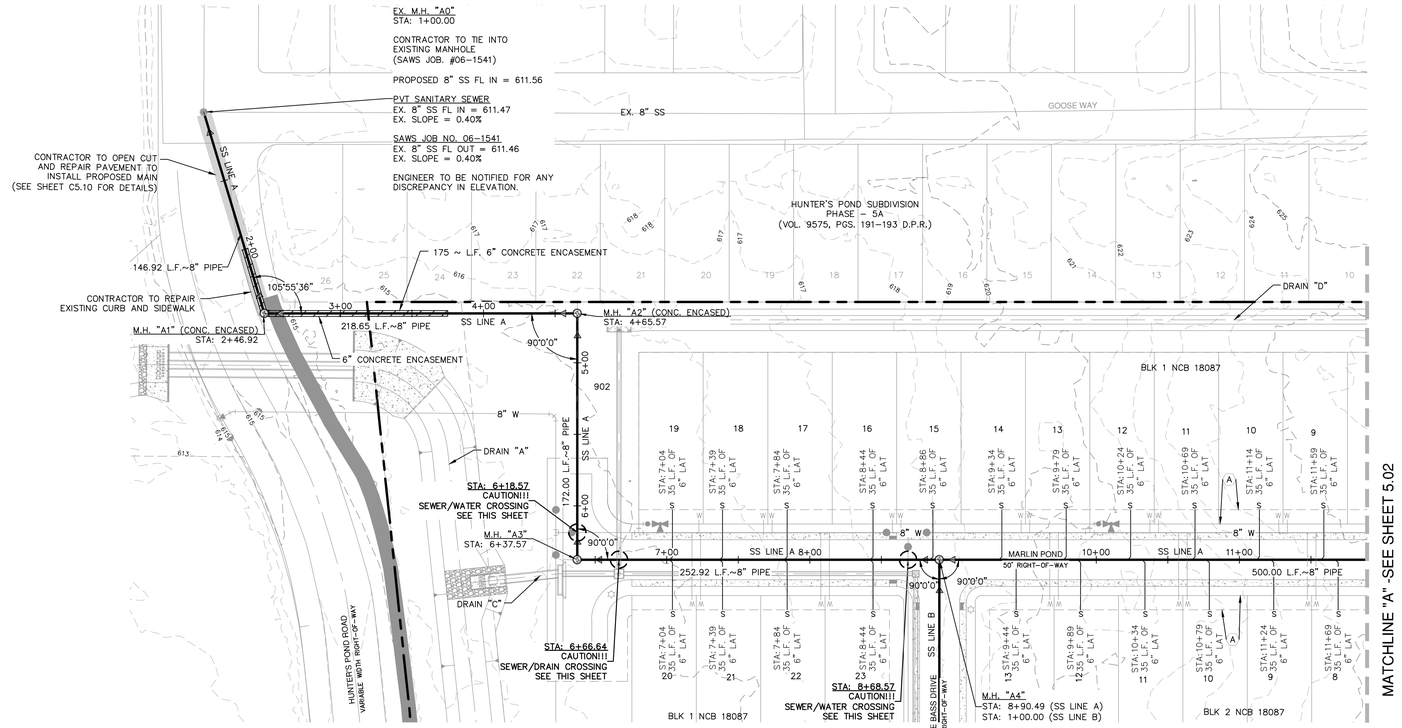

SANITARY SEWER LINE "A"
STA. 1+00.00 TO 12+00.00

VERTICAL SCALE: 1" = 5'
HORIZONTAL SCALE: 1" = 50'

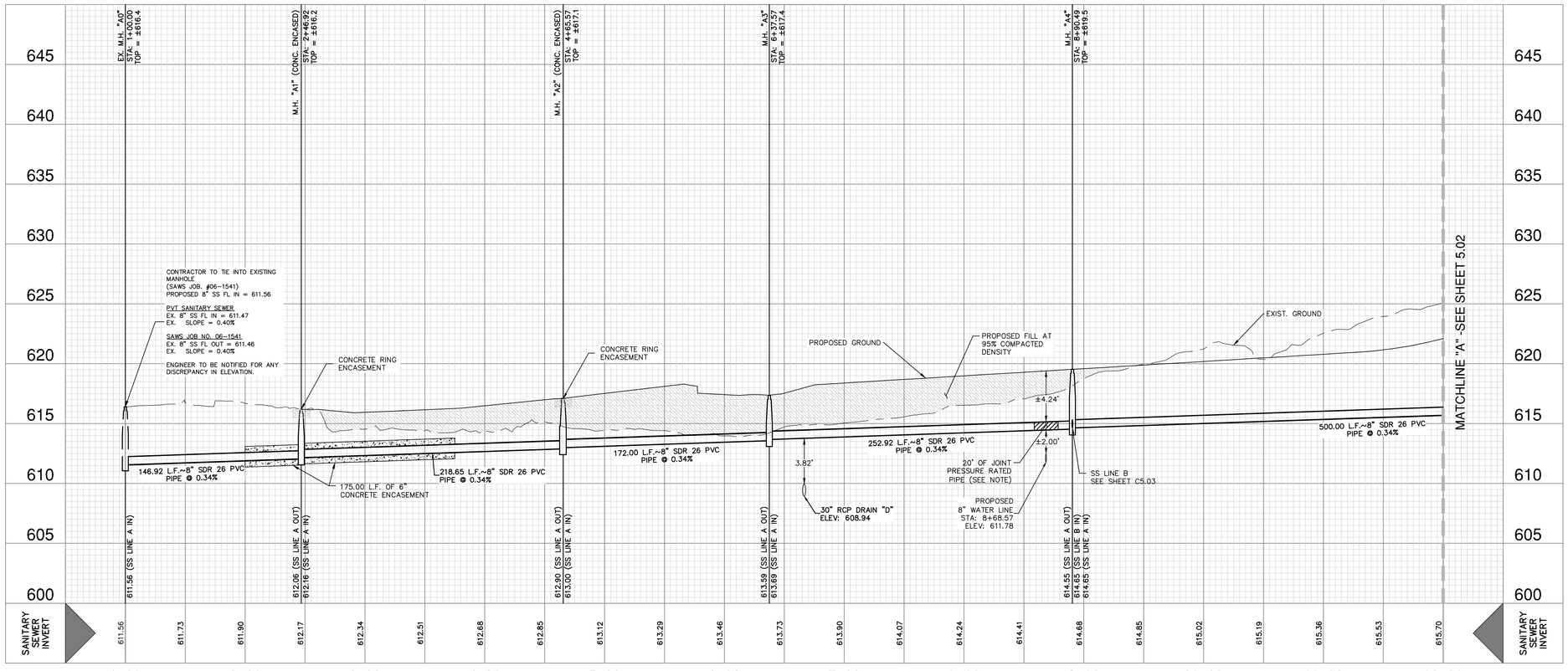

SCALE: 1"= 50'

0' 50' 100' 150'

SEWER LEGEND

PROJECT LIMITS
EXISTING WATER
EXISTING SEWER
PROPOSED SEWER
PROPOSED WATER
PROPOSED SEWER LATERAL
MANHOLE
FIRE HYDRANT

KEY LEGEND

(A) 10' ELEC., GAS, TELE., & CA. T.V. EASEMENT

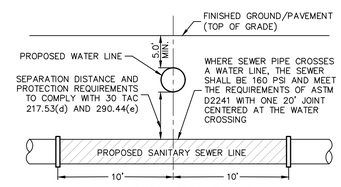

TYPICAL SANITARY SEWER/WATER CROSSING DETAIL

NOT-TO-SCALE

CAUTION!!

CONTRACTOR SHALL BE REQUIRED TO LOCATE ALL PUBLIC OR PRIVATE UTILITIES INCLUDING BUT NOT LIMITING TO: WATER, SEWER, TELEPHONE AND FIBER OPTIC LINES, SITE LIGHTING ELECTRIC, SECONDARY ELECTRIC, PRIMARY ELECTRICAL DUCTBANKS, LANDSCAPE IRRIGATION FACILITIES, AND GAS LINES. ANY UTILITY CONFLICTS THAT ARISE SHOULD BE COMMUNICATED TO THE ENGINEER IMMEDIATELY AND PRIOR TO CONSTRUCTION. THE CONTRACTOR SHALL CONTACT 1-800-DIG-TESS A MINIMUM OF 48 HOURS PRIOR TO THE START OF CONSTRUCTION. ANY DAMAGE TO EXISTING UTILITIES SHALL BE THE SOLE RESPONSIBILITY OF THE CONTRACTOR AND THE REPAIR SHALL BE AT CONTRACTOR'S SOLE EXPENSE WHETHER THE UTILITY IS SHOWN ON THESE PLANS OR NOT.

TRENCH EXCAVATION SAFETY PROTECTION:

CONTRACTOR AND/ OR CONTRACTOR'S INDEPENDENTLY RETAINED EMPLOYEE OR STRUCTURAL DESIGN/ GEOTECHNICAL/ SAFETY/EQUIPMENT CONSULTANT, IF ANY, SHALL REVIEW THESE PLANS AND ANY AVAILABLE GEOTECHNICAL INFORMATION AND THE ANTICIPATED INSTALLATION SITES WITHIN THE PROJECT WORK AREA IN ORDER TO IMPLEMENT CONTRACTOR'S TRENCH EXCAVATION SAFETY PROTECTION SYSTEMS, PROGRAMS AND /OR PROCEDURES FOR THE PROJECT DESCRIBED IN THE CONTRACT DOCUMENTS. THE CONTRACTOR'S IMPLEMENTATION OF THESE SYSTEMS, PROGRAMS AND/OR PROCEDURES SHALL PROVIDE FOR ADEQUATE TRENCH EXCAVATION SAFETY PROTECTION THAT COMPLY WITH AS A MINIMUM, OSHA STANDARDS FOR TRENCH EXCAVATIONS. SPECIFICALLY, CONTRACTOR AND/OR CONTRACTOR'S INDEPENDENTLY RETAINED EMPLOYEE OR SAFETY CONSULTANT SHALL IMPLEMENT A TRENCH SAFETY PROGRAM IN ACCORDANCE WITH OSHA STANDARDS GOVERNING THE PRESENCE AND ACTIVITIES OF INDIVIDUALS WORKING IN AND AROUND TRENCH EXCAVATION.

SEWER

DEVELOPER'S NAME: EL RANCHO SONRISA, LLC
ADDRESS: 8626 JODHPUR
CITY: FAIR OAKS RANCH STATE: TX ZIP: 78015
PHONE# (210) 381-9813 FAX#
SAWS BLOCK MAP# 148538 & 143586 & 146536 TOTAL EDU'S 73 TOTAL ACREAGE 18.19
TOTAL LINEAR FOOTAGE OF PIPE: 8" - 2977 LF PLAT NO. 22-11800482
NUMBER OF LOTS 73 SAWS JOB NO. 22-1688

NO.	REVISION	DATE

STATE OF TEXAS
JON D. ADAME
82567
LICENSED PROFESSIONAL ENGINEER
3-30-23

PAPE-DAWSON ENGINEERS
SAN ANTONIO I AUSTIN I HOUSTON I FORT WORTH I DALLAS
2000 NW LOOP 410 I SAN ANTONIO, TX 78213 I 210.375.9000
TEXAS ENGINEERING FIRM #470 I TEXAS SURVEYING FIRM #10028800

SMILEY TRACT UNIT 1

SAN ANTONIO, TEXAS

SEWER LINE A ~ STA. 1+00.00 TO 12+00.00
SANITARY SEWER PLAN & PROFILE

PLAT NO. 22-11800482
JOB NO. 11100-97
DATE MARCH 2023
DESIGNER AA
CHECKED VS DRAWN AB
SHEET C5.01

Date: Mar 30, 2023, 5:08pm User ID: aatry
File: P:\11\00\97\Design\Civil\SSA1-110097.dwg
THIS DOCUMENT HAS BEEN PRODUCED FROM MATERIAL THAT WAS STORED AND/OR TRANSMITTED ELECTRONICALLY AND MAY HAVE BEEN INADVERTENTLY ALTERED. RELY ONLY ON FINAL HARDCOPY MATERIALS BEARING THE CONSULTANT'S ORIGINAL SIGNATURE AND SEAL. AERIAL IMAGERY PROVIDED BY GOOGLE© UNLESS OTHERWISE NOTED. Imagery © 2016,CAPCOG,Digital Globe,Texas OrthoImagery Program, USDA Farm Service Agency.

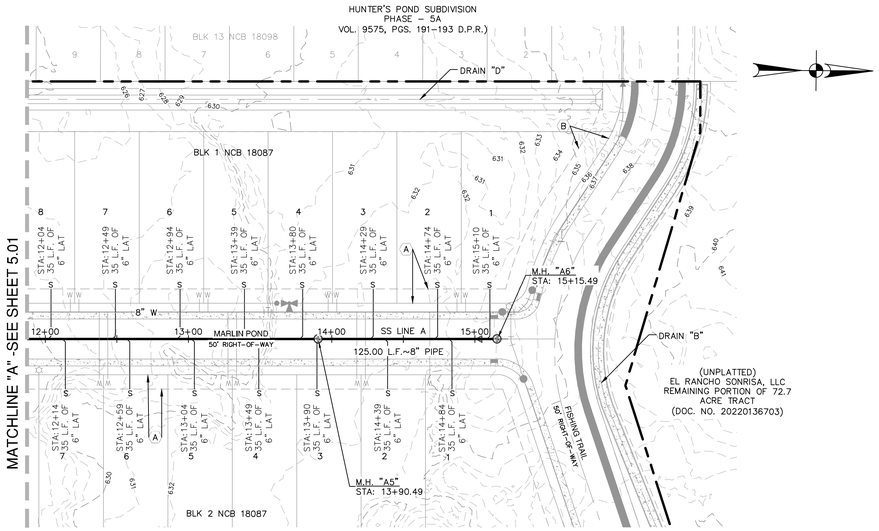

SANITARY SEWER LINE "A"
STA. 12+00.00 TO END

VERTICAL SCALE: 1" = 5'
HORIZONTAL SCALE: 1" = 50'

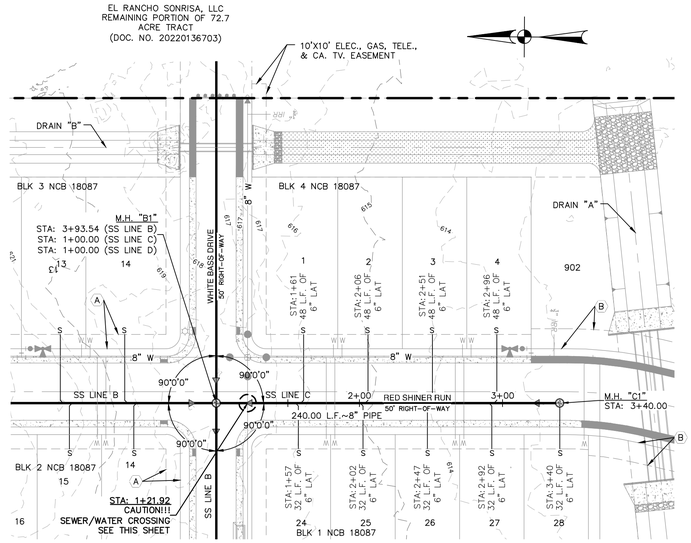

SANITARY SEWER LINE "C"
STA. 1+00.00 TO END

VERTICAL SCALE: 1" = 5'
HORIZONTAL SCALE: 1" = 50'

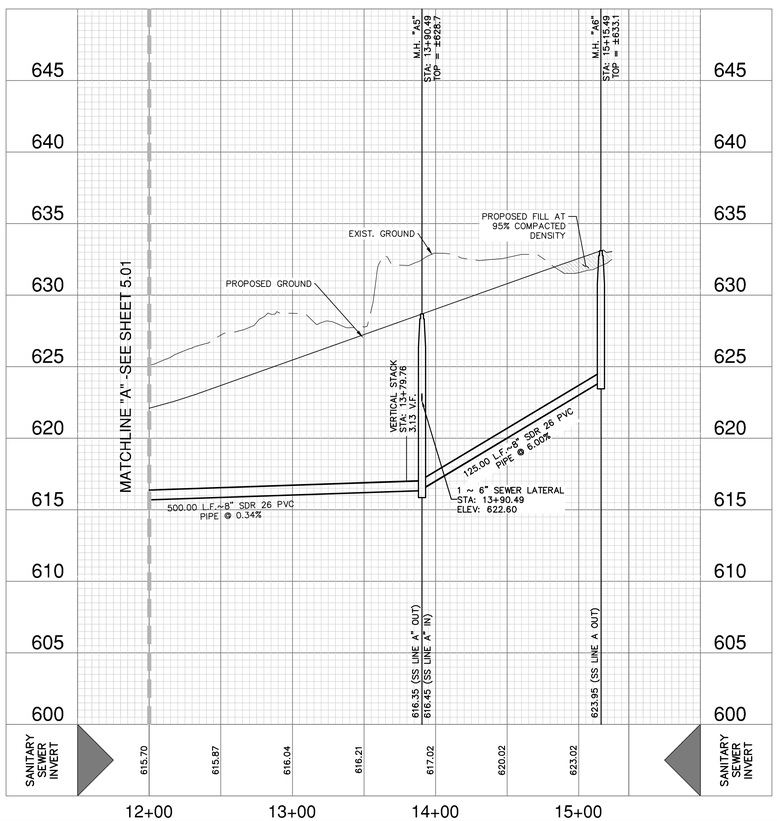

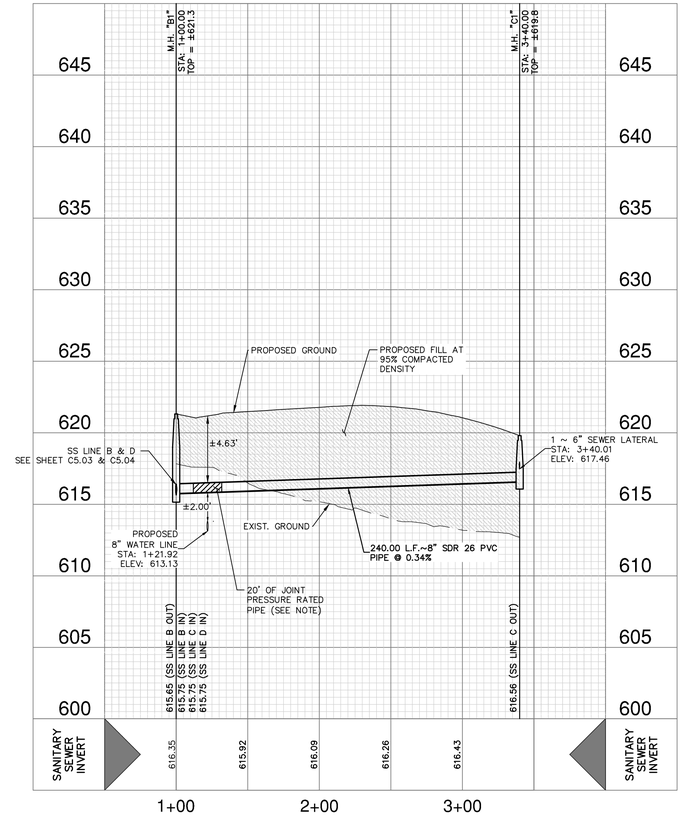

SCALE: 1"= 50'

0' 50' 100' 150'

SEWER LEGEND

- PROJECT LIMITS
- EXISTING WATER
- EXISTING SEWER
- PROPOSED SEWER — MANHOLE
- PROPOSED WATER — FIRE HYDRANT
- PROPOSED SEWER LATERAL

KEY LEGEND

(A) 10' ELEC., GAS, TELE., & CA. T.V. EASEMENT

(B) 14' ELEC., GAS, TELE., & CA. T.V. EASEMENT

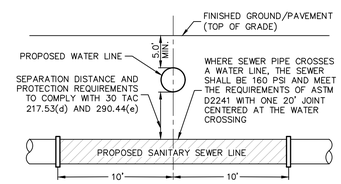

TYPICAL SANITARY
SEWER/WATER CROSSING DETAIL
NOT-TO-SCALE

CAUTION!!

CONTRACTOR SHALL BE REQUIRED TO LOCATE ALL PUBLIC OR PRIVATE UTILITIES INCLUDING BUT NOT LIMITING TO: WATER, SEWER, TELEPHONE AND FIBER OPTIC LINES, SITE LIGHTING ELECTRIC, SECONDARY ELECTRIC, PRIMARY ELECTRICAL DUCTBANKS, LANDSCAPE IRRIGATION FACILITIES, AND GAS LINES. ANY UTILITY CONFLICTS THAT ARISE SHOULD BE COMMUNICATED TO THE ENGINEER IMMEDIATELY AND PRIOR TO CONSTRUCTION. THE CONTRACTOR SHALL CONTACT 1–800–DIG–TESS A MINIMUM OF 48 HOURS PRIOR TO THE START OF CONSTRUCTION. ANY DAMAGE TO EXISTING UTILITIES SHALL BE THE SOLE RESPONSIBILITY OF THE CONTRACTOR AND THE REPAIR SHALL BE AT CONTRACTOR'S SOLE EXPENSE WHETHER THE UTILITY IS SHOWN ON THESE PLANS OR NOT.

TRENCH EXCAVATION SAFETY PROTECTION:

CONTRACTOR AND/ OR CONTRACTOR'S INDEPENDENTLY RETAINED EMPLOYEE OR STRUCTURAL DESIGN/ GEOTECHNICAL/ SAFETY/EQUIPMENT CONSULTANT, IF ANY, SHALL REVIEW THESE PLANS AND ANY AVAILABLE GEOTECHNICAL INFORMATION AND THE ANTICIPATED INSTALLATION SITES WITHIN THE PROJECT WORK AREA IN ORDER TO IMPLEMENT CONTRACTOR'S TRENCH EXCAVATION SAFETY PROTECTION SYSTEMS, PROGRAMS AND /OR PROCEDURES FOR THE PROJECT DESCRIBED IN THE CONTRACT DOCUMENTS. THE CONTRACTOR'S IMPLEMENTATION OF THESE SYSTEMS, PROGRAMS AND/OR PROCEDURES SHALL PROVIDE FOR ADEQUATE TRENCH EXCAVATION SAFETY PROTECTION THAT COMPLY WITH AS A MINIMUM, OSHA STANDARDS FOR TRENCH EXCAVATIONS. SPECIFICALLY, CONTRACTOR AND/OR CONTRACTOR'S INDEPENDENTLY RETAINED EMPLOYEE OR SAFETY CONSULTANT SHALL IMPLEMENT A TRENCH SAFETY PROGRAM IN ACCORDANCE WITH OSHA STANDARDS GOVERNING THE PRESENCE AND ACTIVITIES OF INDIVIDUALS WORKING IN AND AROUND TRENCH EXCAVATION.

SEWER

DEVELOPER'S NAME: EL RANCHO SONRISA, LLC
ADDRESS: 8626 JODHPUR
CITY: FAIR OAKS RANCH STATE: TX ZIP: 78015
PHONE# (210) 381–9813 FAX#
SAWS BLOCK MAP# 146538 & 146536 & 146536 TOTAL EDU'S 73 TOTAL ACREAGE 18.19
TOTAL LINEAR FOOTAGE OF PIPE: 8" – 2977 LF PLAT NO. 22–11800482
NUMBER OF LOTS 73 SAWS JOB NO. 22–1688

NO.	REVISION	DATE

STATE OF TEXAS
JON D. ADAME
82567
LICENSED
PROFESSIONAL ENGINEER
3-30-23

PAPE-DAWSON ENGINEERS
SAN ANTONIO I AUSTIN I HOUSTON I FORT WORTH I DALLAS
2000 NW LOOP 410 I SAN ANTONIO, TX 78213 I 210.375.9000
TEXAS ENGINEERING FIRM #470 I TEXAS SURVEYING FIRM #10028800

SMILEY TRACT UNIT 1

SAN ANTONIO, TEXAS

SEWER LINE A ~ STA. 12+00.00 TO END
SEWER LINE C STA. 1+00.00 TO END
SANITARY SEWER PLAN & PROFILE

PLAT NO. 22-11800482
JOB NO. 11100–97
DATE MARCH 2023
DESIGNER AA
CHECKED VS DRAWN AB
SHEET C5.02

Date: Mar 30, 2023, 5:08pm User ID: oatry
File: P:\111\00\97\Design\Civil\SSA1-1110097.dwg

THIS DOCUMENT HAS BEEN PRODUCED FROM MATERIAL THAT WAS STORED AND/OR TRANSMITTED ELECTRONICALLY AND MAY HAVE BEEN INADVERTENTLY ALTERED. RELY ONLY ON FINAL HARDCOPY MATERIALS BEARING THE CONSULTANT'S ORIGINAL SIGNATURE AND SEAL. AERIAL IMAGERY PROVIDED BY GOOGLE© UNLESS OTHERWISE NOTED. Imagery © 2016,CAPCOG,Digital Globe,Texas OrthoImagery Program, USDA Farm Service Agency.

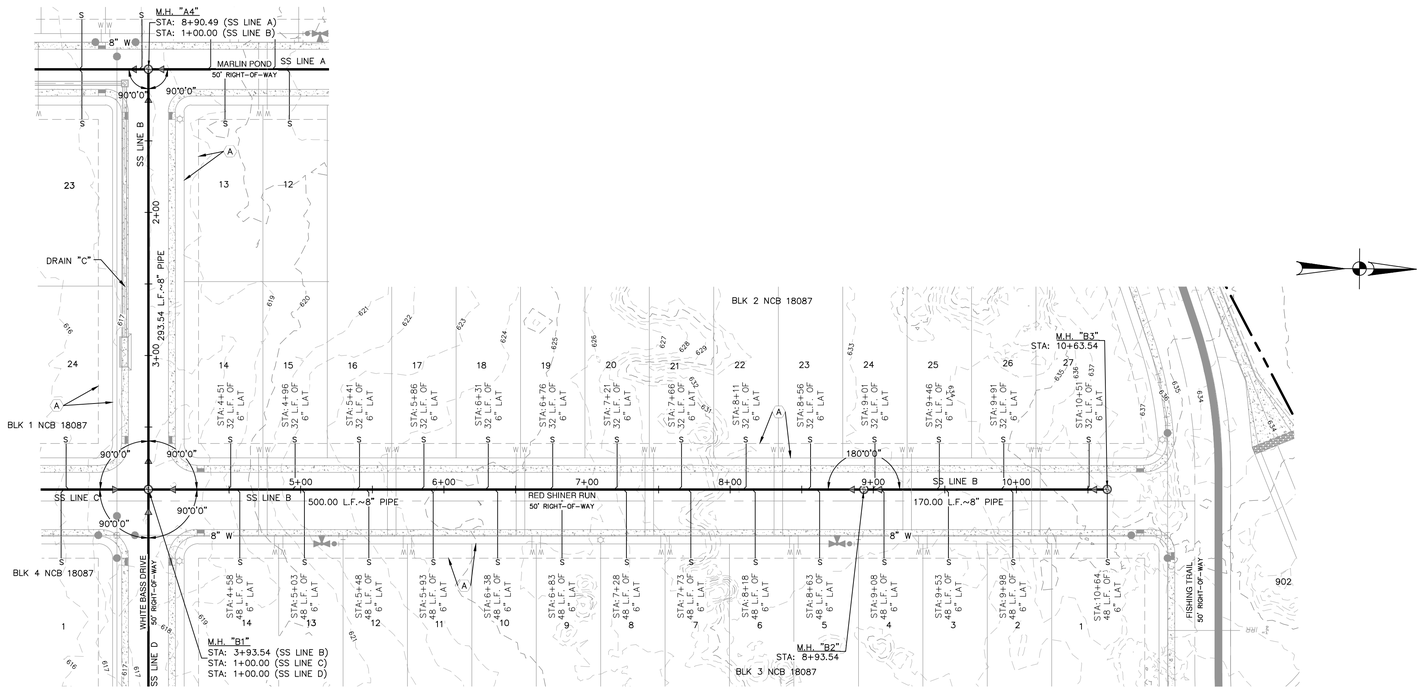

SCALE: 1"= 50'

0' 50' 100' 150'

SEWER LEGEND

PROJECT LIMITS
EXISTING WATER
EXISTING SEWER
PROPOSED SEWER
MANHOLE
FIRE HYDRANT
PROPOSED WATER
PROPOSED SEWER LATERAL

KEY LEGEND

(A) 10' ELEC., GAS, TELE., & CA. T.V. EASEMENT

SANITARY SEWER LINE "B"
STA. 1+00.00 TO END

VERTICAL SCALE: 1" = 5'
HORIZONTAL SCALE: 1" = 50'

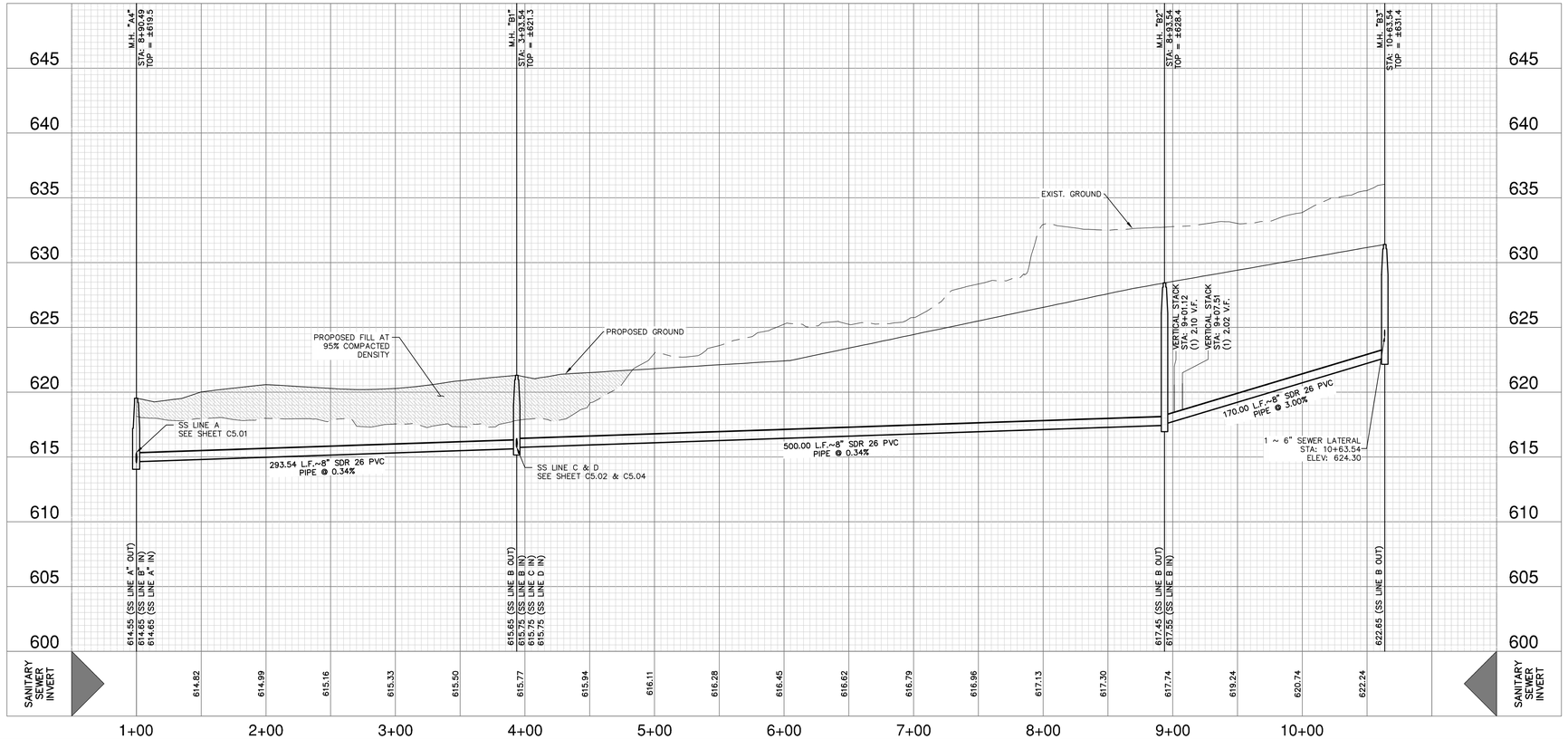

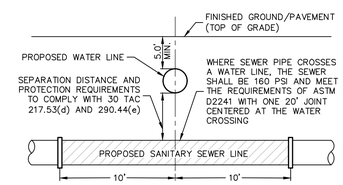

TYPICAL SANITARY SEWER/WATER CROSSING DETAIL

NOT-TO-SCALE

CAUTION!!

CONTRACTOR SHALL BE REQUIRED TO LOCATE ALL PUBLIC OR PRIVATE UTILITIES INCLUDING BUT NOT LIMITING TO: WATER, SEWER, TELEPHONE AND FIBER OPTIC LINES, SITE LIGHTING ELECTRIC, SECONDARY ELECTRIC, PRIMARY ELECTRICAL DUCTBANKS, LANDSCAPE IRRIGATION FACILITIES, AND GAS LINES. ANY UTILITY CONFLICTS THAT ARISE SHOULD BE COMMUNICATED TO THE ENGINEER IMMEDIATELY AND PRIOR TO CONSTRUCTION. THE CONTRACTOR SHALL CONTACT 1-800-DIG-TESS A MINIMUM OF 48 HOURS PRIOR TO THE START OF CONSTRUCTION. ANY DAMAGE TO EXISTING UTILITIES SHALL BE THE SOLE RESPONSIBILITY OF THE CONTRACTOR AND THE REPAIR SHALL BE AT CONTRACTOR'S SOLE EXPENSE WHETHER THE UTILITY IS SHOWN ON THESE PLANS OR NOT.

TRENCH EXCAVATION SAFETY PROTECTION:

CONTRACTOR AND/ OR CONTRACTOR'S INDEPENDENTLY RETAINED EMPLOYEE OR STRUCTURAL DESIGN/ GEOTECHNICAL/ SAFETY/EQUIPMENT CONSULTANT, IF ANY, SHALL REVIEW THESE PLANS AND ANY AVAILABLE GEOTECHNICAL INFORMATION AND THE ANTICIPATED INSTALLATION SITES WITHIN THE PROJECT WORK AREA IN ORDER TO IMPLEMENT CONTRACTOR'S TRENCH EXCAVATION SAFETY PROTECTION SYSTEMS, PROGRAMS AND /OR PROCEDURES FOR THE PROJECT DESCRIBED IN THE CONTRACT DOCUMENTS. THE CONTRACTOR'S IMPLEMENTATION OF THESE SYSTEMS, PROGRAMS AND/OR PROCEDURES SHALL PROVIDE FOR ADEQUATE TRENCH EXCAVATION SAFETY PROTECTION THAT COMPLY WITH AS A MINIMUM, OSHA STANDARDS FOR TRENCH EXCAVATIONS. SPECIFICALLY, CONTRACTOR AND/OR CONTRACTOR'S INDEPENDENTLY RETAINED EMPLOYEE OR SAFETY CONSULTANT SHALL IMPLEMENT A TRENCH SAFETY PROGRAM IN ACCORDANCE WITH OSHA STANDARDS GOVERNING THE PRESENCE AND ACTIVITIES OF INDIVIDUALS WORKING IN AND AROUND TRENCH EXCAVATION.

SEWER

DEVELOPER'S NAME: EL RANCHO SONRISA, LLC
ADDRESS: 8626 JODHPUR
CITY: FAIR OAKS RANCH STATE: TX ZIP: 78015
PHONE# (210) 381-9813 FAX#
SAWS BLOCK MAP# 146538 & 143586 & 146536 TOTAL EDU'S 73 TOTAL ACREAGE 18.19
TOTAL LINEAR FOOTAGE OF PIPE: 8" - 2977 LF PLAT NO. 22-11800482
NUMBER OF LOTS 73 SAWS JOB NO. 22-1688

NO.	REVISION	DATE

STATE OF TEXAS
JON D. ADAME
82567
LICENSED PROFESSIONAL ENGINEER
3-30-23

PAPE-DAWSON ENGINEERS
SAN ANTONIO I AUSTIN I HOUSTON I FORT WORTH I DALLAS
2000 NW LOOP 410 I SAN ANTONIO, TX 78213 I 210.375.9000
TEXAS ENGINEERING FIRM #470 I TEXAS SURVEYING FIRM #10028800

SMILEY TRACT UNIT 1

SAN ANTONIO, TEXAS

SEWER LINE B ~ STA. 1+00.00 TO END
SANITARY SEWER PLAN & PROFILE

PLAT NO. 22-11800482
JOB NO. 11100-97
DATE MARCH 2023
DESIGNER AA
CHECKED VS DRAWN AB
SHEET C5.03

Date: Mar 30, 2023, 5:08pm User ID: aatry
File: P:\11\00\97\Design\Civil\SSA1-1100097.dwg

THIS DOCUMENT HAS BEEN PRODUCED FROM MATERIAL THAT WAS STORED AND/OR TRANSMITTED ELECTRONICALLY AND MAY HAVE BEEN INADVERTENTLY ALTERED. RELY ONLY ON FINAL HARDCOPY MATERIALS BEARING THE CONSULTANT'S ORIGINAL SIGNATURE AND SEAL. AERIAL IMAGERY PROVIDED BY GOOGLE© UNLESS OTHERWISE NOTED. Imagery © 2016,CAPCOG,Digital Globe,Texas OrthoImagery Program, USDA Farm Service Agency.

SCALE: 1"= 50'

0' 50' 100' 150'

SEWER LEGEND

PROJECT LIMITS
EXISTING WATER
EXISTING SEWER
PROPOSED SEWER
PROPOSED WATER
PROPOSED SEWER LATERAL
MANHOLE
FIRE HYDRANT

KEY LEGEND

(A) 10' ELEC., GAS, TELE., & CA. T.V. EASEMENT

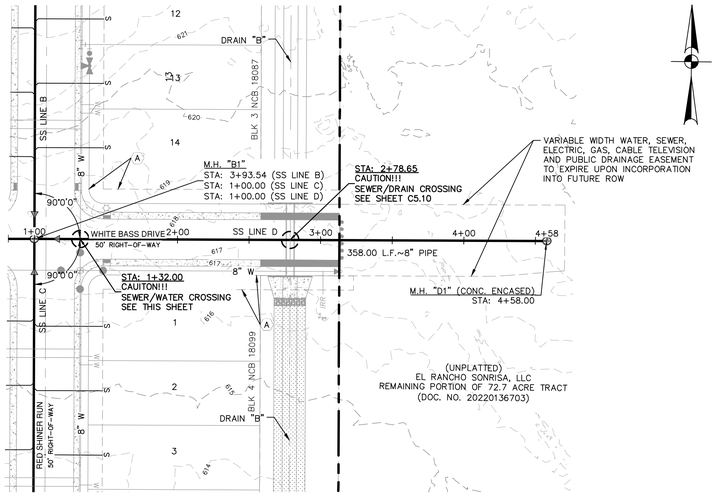

SANITARY SEWER LINE "D"
STA. 1+00.00 TO END

VERTICAL SCALE: 1" = 5'
HORIZONTAL SCALE: 1" = 50'

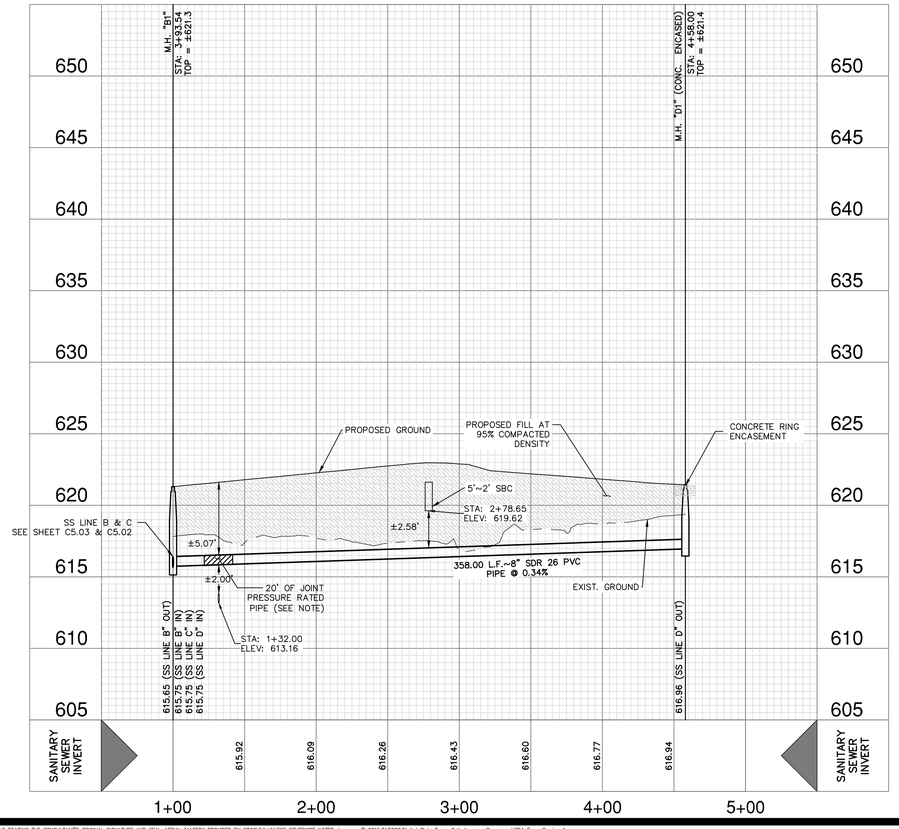

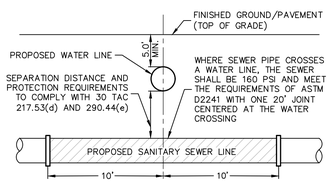

TYPICAL SANITARY
SEWER/WATER CROSSING DETAIL
NOT-TO-SCALE

CAUTION!!

CONTRACTOR SHALL BE REQUIRED TO LOCATE ALL PUBLIC OR PRIVATE UTILITIES INCLUDING BUT NOT LIMITING TO: WATER, SEWER, TELEPHONE AND FIBER OPTIC LINES, SITE LIGHTING ELECTRIC, SECONDARY ELECTRIC, PRIMARY ELECTRICAL DUCTBANKS, LANDSCAPE IRRIGATION FACILITIES, AND GAS LINES. ANY UTILITY CONFLICTS THAT ARISE SHOULD BE COMMUNICATED TO THE ENGINEER IMMEDIATELY AND PRIOR TO CONSTRUCTION. THE CONTRACTOR SHALL CONTACT 1-800-DIG-TESS A MINIMUM OF 48 HOURS PRIOR TO THE START OF CONSTRUCTION. ANY DAMAGE TO EXISTING UTILITIES SHALL BE THE SOLE RESPONSIBILITY OF THE CONTRACTOR AND THE REPAIR SHALL BE AT CONTRACTOR'S SOLE EXPENSE WHETHER THE UTILITY IS SHOWN ON THESE PLANS OR NOT.

TRENCH EXCAVATION SAFETY PROTECTION:

CONTRACTOR AND/ OR CONTRACTOR'S INDEPENDENTLY RETAINED EMPLOYEE OR STRUCTURAL DESIGN/ GEOTECHNICAL/ SAFETY/EQUIPMENT CONSULTANT, IF ANY, SHALL REVIEW THESE PLANS AND ANY AVAILABLE GEOTECHNICAL INFORMATION AND THE ANTICIPATED INSTALLATION SITES WITHIN THE PROJECT WORK AREA IN ORDER TO IMPLEMENT CONTRACTOR'S TRENCH EXCAVATION SAFETY PROTECTION SYSTEMS, PROGRAMS AND /OR PROCEDURES FOR THE PROJECT DESCRIBED IN THE CONTRACT DOCUMENTS. THE CONTRACTOR'S IMPLEMENTATION OF THESE SYSTEMS, PROGRAMS AND/OR PROCEDURES SHALL PROVIDE FOR ADEQUATE TRENCH EXCAVATION SAFETY PROTECTION THAT COMPLY WITH AS A MINIMUM, OSHA STANDARDS FOR TRENCH EXCAVATIONS. SPECIFICALLY, CONTRACTOR AND/OR CONTRACTOR'S INDEPENDENTLY RETAINED EMPLOYEE OR SAFETY CONSULTANT SHALL IMPLEMENT A TRENCH SAFETY PROGRAM IN ACCORDANCE WITH OSHA STANDARDS GOVERNING THE PRESENCE AND ACTIVITIES OF INDIVIDUALS WORKING IN AND AROUND TRENCH EXCAVATION.

SEWER

DEVELOPER'S NAME: EL RANCHO SONRISA, LLC
ADDRESS: 8626 JODHPUR
CITY: FAIR OAKS RANCH STATE: TX ZIP: 78015
PHONE# (210) 381-9813 FAX#
SAWS BLOCK MAP# 148538 & 143586 & 146536 TOTAL EDU'S 73 TOTAL ACREAGE 18.19
TOTAL LINEAR FOOTAGE OF PIPE: 8" - 2977 LF PLAT NO. 22-11800482
NUMBER OF LOTS 73 SAWS JOB NO. 22-1688

NO.	REVISION	DATE

STATE OF TEXAS
JON D. ADAME
82567
LICENSED PROFESSIONAL ENGINEER
3-30-23

PAPE-DAWSON ENGINEERS
SAN ANTONIO I AUSTIN I HOUSTON I FORT WORTH I DALLAS
2000 NW LOOP 410 I SAN ANTONIO, TX 78213 I 210.375.9000
TEXAS ENGINEERING FIRM #470 I TEXAS SURVEYING FIRM #10028800

SMILEY TRACT UNIT 1
SAN ANTONIO, TEXAS

SEWER LINE D ~ STA. 1+00.00 TO END
SANITARY SEWER PLAN & PROFILE

PLAT NO. 22-11800482
JOB NO. 11100-97
DATE MARCH 2023
DESIGNER AA
CHECKED VS DRAWN AA
SHEET C5.04

Date: Mar 30, 2023, 5:08pm User ID: aatry
File: P:\11\00\97\Design\Civil\SSA1-110097.dwg

THIS DOCUMENT HAS BEEN PRODUCED FROM MATERIAL THAT WAS STORED AND/OR TRANSMITTED ELECTRONICALLY AND MAY HAVE BEEN INADVERTENTLY ALTERED. RELY ONLY ON FINAL HARDCOPY MATERIALS BEARING THE CONSULTANT'S ORIGINAL SIGNATURE AND SEAL. AERIAL IMAGERY PROVIDED BY GOOGLE© UNLESS OTHERWISE NOTED. Imagery © 2016,CAPCOG,Digital Globe,Texas OrthoImagery Program, USDA Farm Service Agency.

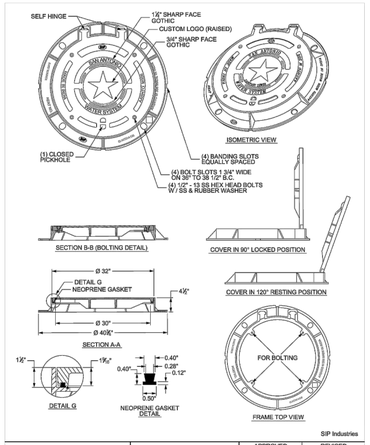

PROPERTY OF SAN ANTONIO WATER SYSTEM SAN ANTONIO, TEXAS	30" MANHOLE RING AND COVER DETAIL	APPROVED AUG 2019	REVISED
		DD 852-07	SHEET 1 OF 8

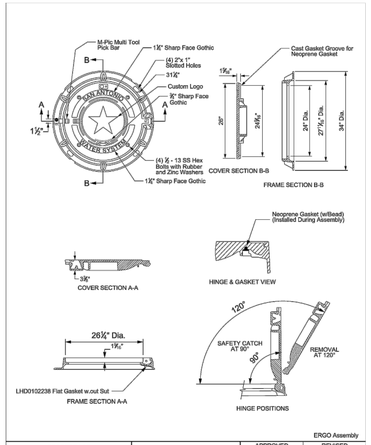

PROPERTY OF SAN ANTONIO WATER SYSTEM SAN ANTONIO, TEXAS	MANHOLE RING AND COVER DETAIL	APPROVED MARCH 2008	REVISED AUG 2019
		DD 852-07	SHEET 2 OF 8

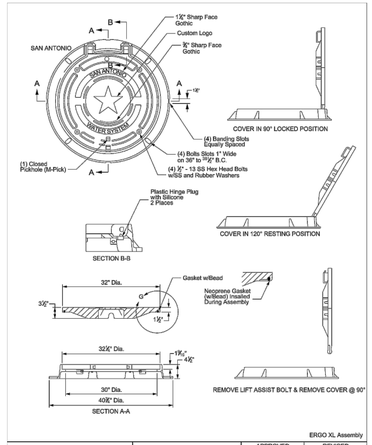

PROPERTY OF SAN ANTONIO WATER SYSTEM SAN ANTONIO, TEXAS	MANHOLE RING AND COVER DETAIL	APPROVED MARCH 2008	REVISED AUG 2019
		DD 852-07	SHEET 3 OF 8

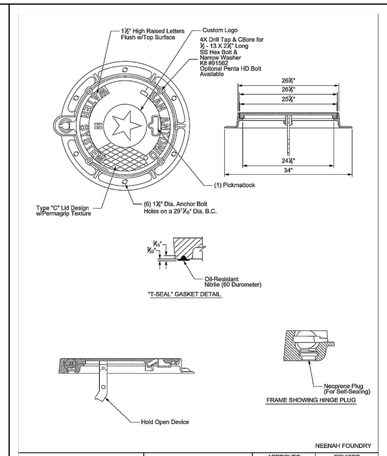

PROPERTY OF SAN ANTONIO WATER SYSTEM SAN ANTONIO, TEXAS	MANHOLE RING AND COVER DETAIL	APPROVED MARCH 2008	REVISED AUG 2019
		DD 852-07	SHEET 4 OF 8

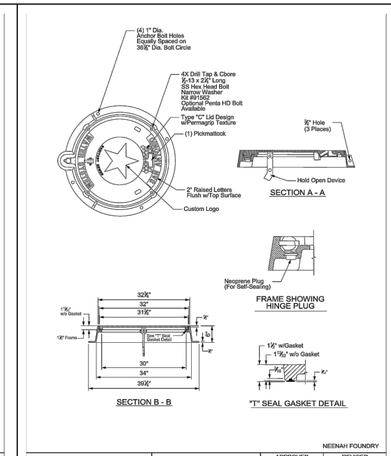

PROPERTY OF SAN ANTONIO WATER SYSTEM SAN ANTONIO, TEXAS	MANHOLE RING AND COVER DETAIL	APPROVED MARCH 2008	REVISED AUG 2019
		DD 852-07	SHEET 5 OF 8

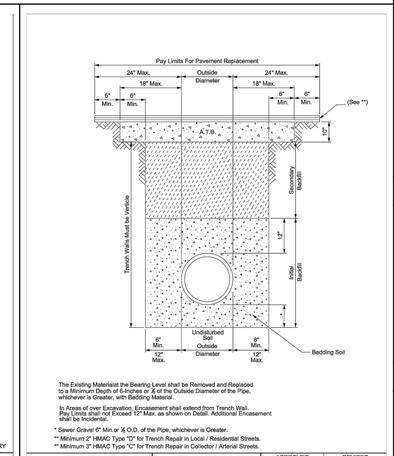

The Existing Materialat the Bearing Level shall be Removed and Replaced to a Minimum Depth of 6-Inches or ⅙ of the Outside Diameter of the Pipe, whichever is Greater, with Bedding Material.

In Areas of over Excavation, Encasement shall extend from Trench Wall. Pay Limits shall not Exceed 12" Max. as shown on Detail. Additional Encasement shall be Incidental.

* Sewer Gravel 6" Min.or ⅙ O.D. of the Pipe, whichever is Greater.
** Minimum 2" HMAC Type "D" for Trench Repair in Local / Residential Streets.
** Minimum 3" HMAC Type "C" for Trench Repair in Collector / Arterial Streets.

PROPERTY OF SAN ANTONIO WATER SYSTEM SAN ANTONIO, TEXAS	SANITARY SEWER PIPE LAID IN TRENCH	APPROVED MARCH 2008	REVISED DEC 2018
		DD-804-01	SHEET 1 OF 1

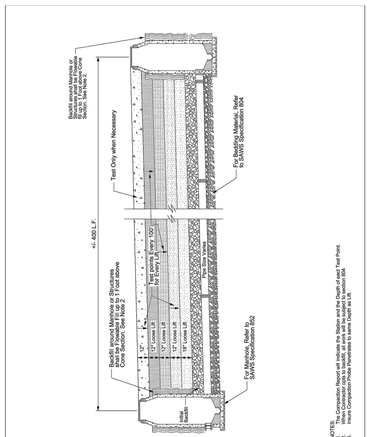

PROPERTY OF SAN ANTONIO WATER SYSTEM SAN ANTONIO, TEXAS	TRENCH COMPACTION DETAIL	APPROVED MARCH 2018	REVISED DEC 2018
		DD 804-02	SHEET 1 OF 1

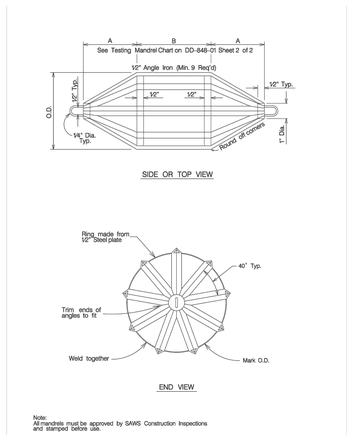

Note:
All mandrels must be approved by SAWS Construction Inspections and stamped before use.

PROPERTY OF SAN ANTONIO WATER SYSTEM SAN ANTONIO, TEXAS	GO, NO GO DEFLECTION TESTING MANDREL	APPROVED March 2008	REVISED
		DD-848-01	SHEET 1 OF 2

SIZE	A	B*	MANDREL O.D. PVC (SDR-26)	RING O.D. PVC (SDR-26)
6"	4.0"	4.5"	5.50	4.79
8"	5.5"	6"	7.37	6.66
10"	7.0"	7.5"	9.21	8.50
12"	8.0"	9"	10.96	10.25
14"	10.0"	11"	13.42	12.71
18"	12.0"	13.5"	——	——
21"	14.0"	16"	——	——
24"	16.0"	18"	——	——
27"	18.0"	20"	——	——

* Minimum Length

CHART

Notes:
PVC pipes and fittings 6" to 15" in diameter shall conform to ASTM D-3034-08.
PVC pipes and fittings 18" to 27" in diameter shall conform to ASTM F-679-08.

This information is provided as a reference. All deflection testing shall be done in accordance with TCEQ Chapter 217.

PROPERTY OF SAN ANTONIO WATER SYSTEM SAN ANTONIO, TEXAS	GO, NO GO DEFLECTION TESTING MANDREL CHART	APPROVED MARCH 2008	REVISED APRIL 2014
		DD-848-01	SHEET 2 OF 2

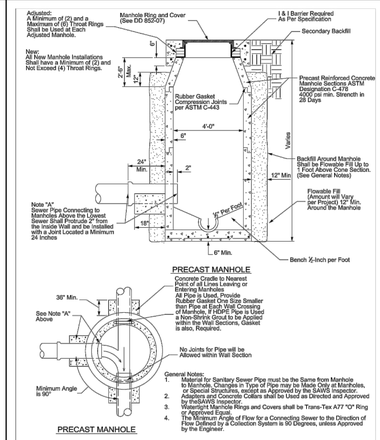

PROPERTY OF SAN ANTONIO WATER SYSTEM SAN ANTONIO, TEXAS	STANDARD PRECAST MANHOLE	APPROVED MAY 2013	REVISED AUG 2019
		DD-852-01	SHEET 1 OF 2

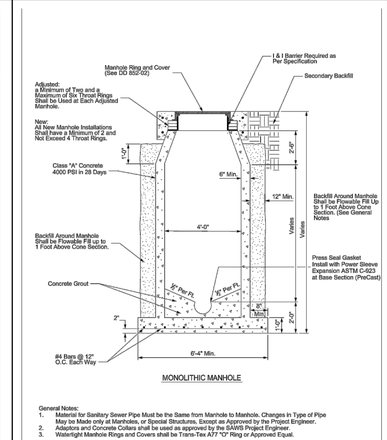

General Notes:
1. Material for Sanitary Sewer Pipe Must be the Same from Manhole to Manhole. Changes in Type of Pipe May be Made only at Manholes, or Special Structures, Except as Approved by the Project Engineer.
2. Adaptors and Concrete Collars shall be used as approved by the SAWS Project Engineer.
3. Watertight Manhole Rings and Covers shall be Trans-Tex A77 "O" Ring or Approved Equal.

PROPERTY OF SAN ANTONIO WATER SYSTEM SAN ANTONIO, TEXAS	STANDARD MONOLITHIC MANHOLE	APPROVED March 2008	REVISED AUG 2019
		DD 852-01	SHEET 2 OF 2

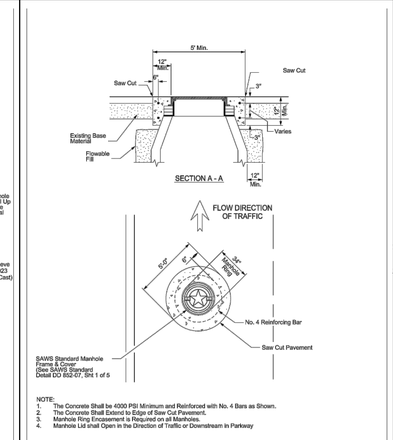

NOTE:
1. The Concrete Shall be 4000 PSI Minimum and Reinforced with No. 4 Bars as Shown.
2. The Concrete Shall Extend to Edge of Saw Cut Pavement.
3. Manhole Ring Encasement is Required on all Manholes.
4. Manhole Lid shall Open in the Direction of Traffic or Downstream in Parkway

PROPERTY OF SAN ANTONIO WATER SYSTEM SAN ANTONIO, TEXAS	MANHOLE RING ENCASEMENT DETAIL	APPROVED AUGUST 2009	REVISED AUG 2019
		DD 852-03	SHEET 1 OF 2

Depth and grade of service laterals as shown, are typical only. Actual depth, alignment and grade of service laterals shall be determined by the Engineer based on the elevations of the sewer main, street, natural ground and building to be serviced.

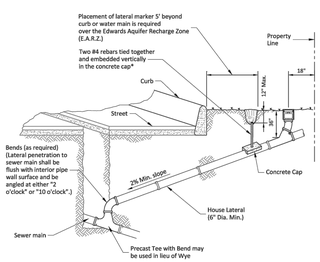

HOUSE LATERAL DETAIL

Note:
A minimum of 3' of cover to subgrade is necessary, otherwise concrete encasement will be required.

PROPERTY OF SAN ANTONIO WATER SYSTEM SAN ANTONIO, TEXAS	HOUSE LATERAL DETAIL (IN THE E.A.R.Z.)	APPROVED March 2008	REVISED December 2018
		DD-854-EARZ	SHEET 1 OF 1

LATERAL CONNECTION TO EXISTING SEWER MAIN

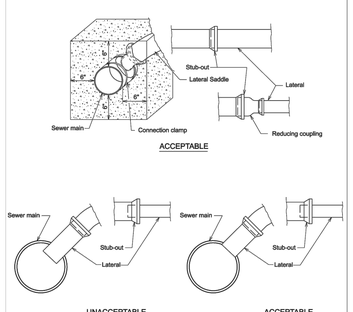

Note:
The saddle shall be permanently bonded to the existing main by the use of compounds or or clamps as recommended by the manufacturer.

PROPERTY OF SAN ANTONIO WATER SYSTEM SAN ANTONIO, TEXAS	LATERAL CONNECTION	APPROVED MARCH 2008	REVISED APRIL 2014
		DD-854-03	SHEET 1 OF 1

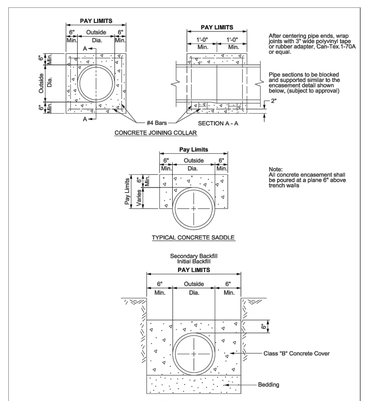

Note:
All concrete encasement shall be poured at a plane 6" above trench walls

PROPERTY OF SAN ANTONIO WATER SYSTEM SAN ANTONIO, TEXAS	TYPICAL CONCRETE DETAILS	APPROVED MARCH 2008	REVISED DEC 2018
		DD 858-02	SHEET 1 OF 1

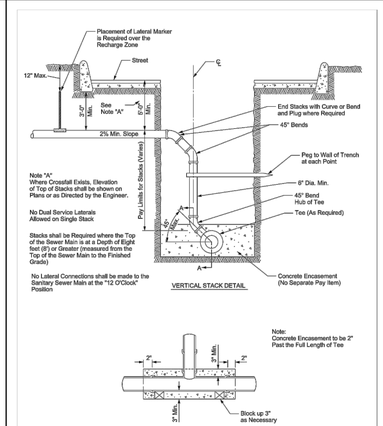

PROPERTY OF SAN ANTONIO WATER SYSTEM SAN ANTONIO, TEXAS	TYPICAL VERTICAL STACK DETAIL	APPROVED MARCH 2008	REVISED AUG 2019
		DD 860-01	SHEET 1 OF 2

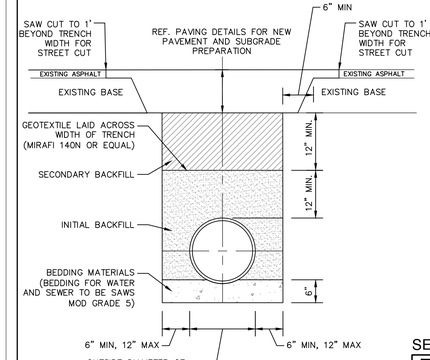

UTILITY & STORM DRAINAGE TRENCH

NOT-TO-SCALE

SEWER

DEVELOPER'S NAME: EL RANCHO SONRISA, LLC
ADDRESS: 8626 JODHPUR
CITY: FAIR OAKS RANCH STATE: TX ZIP: 78015
PHONE# (210) 381-9813 FAX#
SAWS BLOCK MAP# 146538 TOTAL EDU'S 73 TOTAL ACREAGE 18.19
TOTAL LINEAR FOOTAGE OF PIPE: 8" – 2977 LF PLAT NO. 22-11800482
NUMBER OF LOTS 73 SAWS JOB NO. 22-1688

NO.	REVISION	DATE

STATE OF TEXAS
JON D. ADAME
82567
LICENSED PROFESSIONAL ENGINEER
3-30-23

PAPE-DAWSON ENGINEERS
SAN ANTONIO I AUSTIN I HOUSTON I FORT WORTH I DALLAS
2000 NW LOOP 410 I SAN ANTONIO, TX 78213 I 210.375.9000
TEXAS ENGINEERING FIRM #470 I TEXAS SURVEYING FIRM #10028800

SMILEY TRACT UNIT 1
SAN ANTONIO, TEXAS
SANITARY SEWER DETAILS

PLAT NO. 22-11800482
JOB NO. 11100-97
DATE MARCH 2023
DESIGNER AA
CHECKED VS DRAWN AA
SHEET C5.10

Date: Mar 30, 2023, 5:09pm User ID: oatr
File: P:\111\00\97\Design\Civil\SSD7-11100097.dwg

THIS DOCUMENT HAS BEEN PRODUCED FROM MATERIAL THAT WAS STORED AND/OR TRANSMITTED ELECTRONICALLY AND MAY HAVE BEEN INADVERTENTLY ALTERED. RELY ONLY ON FINAL HARDCOPY MATERIALS BEARING THE CONSULTANT'S ORIGINAL SIGNATURE AND SEAL. AERIAL IMAGERY PROVIDED BY GOOGLE® UNLESS OTHERWISE NOTED. Imagery © 2016,CAPCOG,Digital Globe,Texas Orthoimagery Program, USDA Farm Service Agency.

SAWS CONSTRUCTION NOTES

(LAST REVISED JANUARY 2022)

SAWS GENERAL SECTION

1. ALL MATERIALS AND CONSTRUCTION PROCEDURES WITHIN THE SCOPE OF THIS CONTRACT SHALL BE APPROVED BY THE SAN ANTONIO WATER SYSTEM (SAWS) AND COMPLY WITH THE PLANS, SPECIFICATIONS, GENERAL CONDITIONS AND WITH THE FOLLOWING AS APPLICABLE:

   A. CURRENT TEXAS COMMISSION ON ENVIRONMENTAL QUALITY (TCEQ) "DESIGN CRITERIA FOR DOMESTIC WASTEWATER SYSTEM"; TEXAS ADMINISTRATIVE CODE (TAC) TITLE 30 PART 1 CHAPTER 217 AND "PUBLIC DRINKING WATER"; TAC TITLE 30 PART 1 CHAPTER 290.
   B. CURRENT TXDOT "STANDARD SPECIFICATIONS FOR CONSTRUCTION OF HIGHWAYS, STREETS AND DRAINAGE".
   C. CURRENT "SAN ANTONIO WATER SYSTEM STANDARD SPECIFICATIONS FOR WATER AND SANITARY SEWER CONSTRUCTION".
   D. CURRENT CITY OF SAN ANTONIO "STANDARD SPECIFICATIONS FOR PUBLIC WORKS CONSTRUCTION".
   E. CURRENT CITY OF SAN ANTONIO "UTILITY EXCAVATION CRITERIA MANUAL" (UECM).

2. THE CONTRACTOR SHALL NOT PROCEED WITH ANY PIPE INSTALLATION WORK UNTIL THEY OBTAIN A COPY OF THE APPROVED COUNTER PERMIT OR GENERAL CONSTRUCTION PERMIT (GCP) FROM THE CONSULTANT AND HAS BEEN NOTIFIED BY SAWS CONSTRUCTION INSPECTION DIVISION TO PROCEED WITH THE WORK AND HAS ARRANGED A MEETING WITH THE INSPECTOR AND CONSULTANT FOR THE WORK REQUIREMENTS. WORK COMPLETED BY THE CONTRACTOR WITHOUT AN APPROVED COUNTER PERMIT AND/OR A GCP WILL BE SUBJECT TO REMOVAL AND REPLACEMENT AT THE EXPENSE OF THE CONTRACTORS AND/OR THE DEVELOPER.

3. THE CONTRACTOR SHALL OBTAIN THE SAWS STANDARD DETAILS FROM THE SAWS WEBSITE, HTTP://WWW.SAWS.ORG/BUSINESS_CENTER/SPECS. UNLESS OTHERWISE NOTED WITHIN THE DESIGN PLANS.

4. THE CONTRACTOR IS TO MAKE ARRANGEMENTS WITH THE SAWS CONSTRUCTION INSPECTION DIVISION AT (210) 233-2973, ON NOTIFICATION PROCEDURES THAT WILL BE USED TO NOTIFY AFFECTED HOME RESIDENTS AND/OR PROPERTY OWNERS 48 HOURS PRIOR TO BEGINNING ANY WORK.

5. LOCATION AND DEPTH OF EXISTING UTILITIES AND SERVICE LATERALS SHOWN ON THE PLANS ARE UNDERSTOOD TO BE APPROXIMATE. ACTUAL LOCATIONS AND DEPTHS MUST BE FIELD VERIFIED BY THE CONTRACTOR AT LEAST 1 WEEK PRIOR TO CONSTRUCTION. IT SHALL BE THE CONTRACTOR'S RESPONSIBILITY TO LOCATE UTILITY SERVICE LINES AS REQUIRED FOR CONSTRUCTION AND TO PROTECT THEM DURING CONSTRUCTION AT NO COST TO SAWS.

6. THE CONTRACTOR SHALL VERIFY THE EXACT LOCATION OF UNDERGROUND UTILITIES AND DRAINAGE STRUCTURES AT LEAST 1-2 WEEKS PRIOR TO CONSTRUCTION WHETHER SHOWN ON PLANS OR NOT. PLEASE ALLOW UP TO 7 BUSINESS DAYS FOR LOCATES REQUESTING PIPE LOCATION MARKERS ON SAWS FACILITIES. THE FOLLOWING CONTACT INFORMATION ARE SUPPLIED FOR VERIFICATION PURPOSES:

   - SAWS UTILITY LOCATES: HTTP://WWW.SAWS.ORG/SERVICE/LOCATES
   - COSA DRAINAGE (210) 207-0724 OR (210) 207-6026
   - COSA TRAFFIC SIGNAL OPERATIONS (210) 206-8480
   - COSA TRAFFIC SIGNAL DAMAGES (210) 207-3951
   - TEXAS STATE WIDE ONE CALL LOCATOR 1-800-545-6005 OR 811

7. THE CONTRACTOR SHALL BE RESPONSIBLE FOR RESTORING EXISTING FENCES, CURBS, STREETS, DRIVEWAYS, SIDEWALKS, LANDSCAPING AND STRUCTURES TO ITS ORIGINAL OR BETTER CONDITION IF DAMAGES ARE MADE AS A RESULT OF THE PROJECT'S CONSTRUCTION.

8. ALL WORK IN TEXAS DEPARTMENT OF TRANSPORTATION (TXDOT) AND/OR BEXAR COUNTY RIGHT-OF-WAY SHALL BE DONE IN ACCORDANCE WITH RESPECTIVE CONSTRUCTION SPECIFICATIONS AND PERMIT REQUIREMENTS.

9. THE CONTRACTOR SHALL COMPLY WITH CITY OF SAN ANTONIO OR OTHER GOVERNING MUNICIPALITY'S TREE ORDINANCES WHEN EXCAVATING NEAR TREES.

10. THE CONTRACTOR SHALL NOT PLACE ANY WASTE MATERIALS IN THE 100-YEAR FLOOD PLAIN WITHOUT FIRST OBTAINING AN APPROVED FLOOD PLAIN PERMIT.

11. HOLIDAY WORK: CONTRACTORS WILL NOT BE ALLOWED TO PERFORM SAWS WORK ON SAWS RECOGNIZED HOLIDAYS. REQUEST SHOULD BE SENT TO CONSTWORKREQ@SAWS.ORG.

    WEEKEND WORK: CONTRACTORS ARE REQUIRED TO NOTIFY THE SAWS INSPECTION CONSTRUCTION DEPARTMENT 48 HOURS IN ADVANCE TO REQUEST WEEKEND WORK. REQUEST SHOULD BE SENT TO CONSTWORKREQ@SAWS.ORG.

    ANY AND ALL SAWS UTILITY WORK INSTALLED WITHOUT HOLIDAY/WEEKEND APPROVAL WILL BE SUBJECT TO BE UNCOVERED FOR PROPER INSPECTION.

12. COMPACTION NOTE (ITEM 804): THE CONTRACTOR SHALL BE RESPONSIBLE FOR MEETING THE COMPACTION REQUIREMENTS ON ALL TRENCH BACKFILL AND FOR PAYING FOR THE TESTS PERFORMED BY A THIRD PARTY. COMPACTION TESTS WILL BE DONE AT ONE LOCATION POINT RANDOMLY SELECTED, OR AS INDICATED BY THE SAWS INSPECTOR AND/OR THE TEST ADMINISTRATOR, PER EACH 12-INCH LOOSE LIFT PER 400 LINEAR FEET AT A MINIMUM. THIS PROJECT WILL NOT BE ACCEPTED AND FINALIZED BY SAWS WITHOUT THIS REQUIREMENT BEING MET AND VERIFIED BY PROVIDING ALL NECESSARY DOCUMENTED TEST RESULTS.

13. A COPY OF ALL TESTING REPORTS SHALL BE FORWARDED TO SAWS CONSTRUCTION INSPECTION DIVISION.

SAWS SEWER NOTES

1. THE CONTRACTOR IS RESPONSIBLE FOR ENSURING THAT NO SANITARY SEWER OVERFLOW (SSO) OCCURS AS A RESULT OF THEIR WORK. ALL CONTRACTOR PERSONNEL RESPONSIBLE FOR SSO PREVENTION AND CONTROL SHALL BE TRAINED ON PROPER RESPONSE. SHOULD AN SSO OCCUR, THE CONTRACTOR SHALL:

   A. IDENTIFY THE SOURCE OF THE SSO AND NOTIFY SAWS EMERGENCY OPERATIONS CENTER (EOC) IMMEDIATELY AT (210) 233-2014. PROVIDE THE ADDRESS OF THE SPILL AND AN ESTIMATED VOLUME OR FLOW.
   B. ATTEMPT TO ELIMINATE THE SOURCE OF THE SSO.
   C. CONTAIN SEWAGE FROM THE SSO TO THE EXTENT OF PREVENTING A POSSIBLE CONTAMINATION OF WATERWAYS.
   D. CLEAN UP SPILL SITE (RETURN CONTAINED SEWAGE TO THE COLLECTION SYSTEM IF POSSIBLE) AND PROPERLY DISPOSE OF CONTAMINATED SOIL/MATERIALS.
   E. CLEAN THE AFFECTED SEWER MAINS AND REMOVE ANY DEBRIS.
   F. MEET ALL POST-SSO REQUIREMENTS AS PER THE EPA CONSENT DECREE, INCLUDING LINE CLEANING AND TELEVISING THE AFFECTED SEWER MAINS (AT SAWS DIRECTION) WITHIN 24 HOURS.

SHOULD THE CONTRACTOR FAIL TO ADDRESS AN SSO IMMEDIATELY AND TO SAWS SATISFACTION, THEY WILL BE RESPONSIBLE FOR ALL COSTS INCURRED BY SAWS, INCLUDING ANY FINES FROM EPA, TCEQ AND/OR ANY OTHER FEDERAL, STATE OR LOCAL AGENCIES.

NO SEPARATE MEASUREMENT OR PAYMENT SHALL BE MADE FOR THIS WORK. ALL WORK SHALL BE DONE ACCORDING TO GUIDELINES SET BY THE TCEQ AND SAWS.

2. IF BYPASS PUMPING IS REQUIRED, THE CONTRACTOR SHALL PERFORM SUCH WORK IN ACCORDANCE WITH SAWS STANDARD SPECIFICATION FOR WATER AND SANITARY SEWER CONSTRUCTION, ITEM NO. 864, "BYPASS PUMPING".

3. PRIOR TO TIE-INS, ANY SHUTDOWNS OF EXISTING FORCE MAINS OF ANY SIZE MUST BE COORDINATED WITH THE SAWS CONSTRUCTION INSPECTION DIVISION AT (210) 233-2973 AT LEAST ONE WEEK IN ADVANCE OF THE SHUTDOWN. THE CONTRACTOR MUST ALSO PROVIDE A SEQUENCE OF WORK AS RELATED TO THE TIE-INS. THIS IS AT NO ADDITIONAL COST TO SAWS OR THE PROJECT AND IT IS THE RESPONSIBILITY OF THE CONTRACTOR TO SEQUENCE THE WORK ACCORDINGLY.

4. SEWER PIPE WHERE WATER LINE CROSSES SHALL BE 160 PSI AND MEET THE REQUIREMENTS OF ASTM D2241, TAC 217.53 AND TCEQ 290.44(E)(4)(B). CONTRACTOR SHALL CENTER A 20' JOINT OF 160 PSI PRESSURE RATED PVC AT THE PROPOSED WATER CROSSING.

5. ELEVATIONS POSTED FOR TOP OF MANHOLES ARE FOR REFERENCE ONLY: IT SHALL BE THE RESPONSIBILITY OF THE CONTRACTOR TO MAKE ALLOWANCES AND ADJUSTMENTS FOR TOP OF MANHOLES TO MATCH THE FINISHED GRADE OF THE PROJECT'S IMPROVEMENTS. (NSPI)

6. SPILLS, OVERFLOWS, OR DISCHARGES OF WASTEWATER: ALL SPILLS, OVERFLOWS, OR DISCHARGES OF WASTEWATER, RECYCLED WATER, PETROLEUM PRODUCTS, OR CHEMICALS MUST BE REPORTED IMMEDIATELY TO THE SAWS INSPECTOR ASSIGNED TO THE COUNTER PERMIT OR GENERAL CONSTRUCTION PERMIT (GCP). THIS REQUIREMENT APPLIES TO EVERY SPILL, OVERFLOW, OR DISCHARGE REGARDLESS OF SIZE.

7. MANHOLE AND ALL PIPE TESTING (INCLUDING THE TV INSPECTION) MUST BE PERFORMED AND PASSED PRIOR TO FINAL FIELD ACCEPTANCE BY SAWS CONSTRUCTION INSPECTION DIVISION, AS PER THE SAWS SPECIFICATIONS FOR WATER AND SANITARY SEWER CONSTRUCTION.

8. ALL PVC PIPE OVER 14 FEET OF COVER SHALL BE EXTRA STRENGTH WITH MINIMUM PIPE STIFFNESS OF 115 PSI.

PROJECT SEWER NOTES

1. ALL RESIDENTIAL SEWER SERVICE LATERALS ARE 6" DIA. AND SHALL BE EXTENDED TO 10' PAST THE PROPERTY LINE AND CAPPED AND SEALED. CONTRACTOR SHALL INSTALL A 2" X 4" STAKE, FOUR (4) FEET LONG, TWO (2) FEET DEEP INTO THE GROUND AT THE END OF EACH SERVICE. NO SEPARATE PAY ITEM.
2. CONTRACTOR TO INSTALL CLEANOUTS AT THE END OF ALL SEWER LATERALS, PER LATERAL DETAIL SHEET C5.10
3. NO VERTICAL STACKS ALLOWED FOR ANY LOTS UNLESS OTHERWISE SPECIFIED BY THE ENGINEER.
4. ALL 6" SEWER LATERALS WILL BE SET AT 2% GRADE FROM THE MAIN TO THE PROPERTY LINE.
5. WHEN HORIZONTAL DISTANCE BETWEEN SEWER PIPES AND WATER MAIN IS LESS THAN 9 FOOT OF SEPARATION, SEWER MAIN SHALL BE INSTALLED WITH 150 PSI (MIN) PRESSURE PIPE AND FITTINGS IN ACCORDANCE WITH SAWS CONSTRUCTION CRITERIA FOR CONSTRUCTION OF SEWER MAINS IN THE VICINITY OF WATER MAINS.
6. CONTRACTOR SHALL ENSURE THAT MANHOLES OUTSIDE OF PAVED AREAS ARE SET WITH TOP ELEVATIONS 6" ABOVE FINISHED GRADE WITH CONCRETE RING ENCASEMENT.
7. ALL SEWER PIPES SHALL BE 8" PVC (SDR 26), UNLESS OTHERWISE NOTED.
8. CONTRACTOR IS TO VERIFY EXISTING INVERT OF EXISTING SANITARY SEWER MAINS AND ALERT ENGINEER IMMEDIATELY OF ANY DIFFERENCE FROM INVERT SHOWN ON PLANS.
9. CONTRACTOR SHALL PROTECT ALL EXISTING FENCES. ANY FENCE DAMAGED BY THE CONTRACTOR SHALL BE REPAIRED BY THE CONTRACTOR AT THEIR EXPENSE.
10. THE CONTRACTOR WILL BE RESPONSIBLE FOR DETERMINING EXACT LOCATION OF ALL UTILITIES AND DRAINAGE STRUCTURES WHETHER SHOWN ON THE PLANS OR NOT. THE CONTRACTOR SHALL UNCOVER EXISTING UTILITIES PRIOR TO CONSTRUCTION TO VERIFY SIZE, GRADE, AND LOCATION. THE CONTRACTOR SHALL NOTIFY THE ENGINEER IMMEDIATELY OF ANY DEVIATIONS FROM PLANS PRIOR TO BEGINNING CONSTRUCTION. ANY DAMAGE TO EXISTING UTILITIES, WHETHER SHOWN ON THE PLANS OR NOT, SHALL BE THE CONTRACTOR'S RESPONSIBILITY TO REPAIR, AT HIS EXPENSE.
11. CONCRETE RING ENCASEMENT TO BE INSTALLED ON ALL MANHOLES AND, WITHIN LIMITS OF PAVEMENT, BE INSTALLED TO THE TOP OF THE BASE LAYER WITH A MINIMUM OF 2" OF ASPHALT ON TOP OF THE RING ENCASEMENT.
12. MANHOLE OPENING INCREASED TO 30" AS PER TAC CHAPTER 217.55.
13. ALL SEWER PIPE LATERALS SHALL BE SDR 26 (CLASS 160) PVC PIPE.
14. IF THE GIVEN TOP OF MANHOLE ELEVATION DOES NOT AGREE ON ACTUAL GROUND SURFACE OR FINISH PAVEMENT, THE CONTRACTOR SHALL ADJUST ELEVATIONS SUCH THAT THE TOP OF MANHOLE SHALL BE 0.5' ABOVE EXISTING GROUND, OR FLUSH TO FINISH ASPHALT PAVEMENT.
15. ALL MANHOLES CONSTRUCTED OVER THE EDWARDS AQUIFER RECHARGE ZONE SHOULD BE WATERTIGHT.

SEWER

DEVELOPER'S NAME: EL RANCHO SONRISA, LLC
ADDRESS: 8626 JODHPUR
CITY: FAIR OAKS RANCH STATE: TX ZIP: 78015
PHONE# (210) 381-9813 FAX#
SAWS BLOCK MAP# 146538 & 143586 & 146536 TOTAL EDU'S 73 TOTAL ACREAGE 18.19
TOTAL LINEAR FOOTAGE OF PIPE: 8" - 2977 LF PLAT NO. 22-11800482
NUMBER OF LOTS 73 SAWS JOB NO. 22-1688

NO.	REVISION	DATE

STATE OF TEXAS
JON D. ADAME
82567
LICENSED PROFESSIONAL ENGINEER
3-30-23

PAPE-DAWSON ENGINEERS
SAN ANTONIO I AUSTIN I HOUSTON I FORT WORTH I DALLAS
2000 NW LOOP 410 I SAN ANTONIO, TX 78213 I 210.375.9000
TEXAS ENGINEERING FIRM #470 I TEXAS SURVEYING FIRM #10028800

SMILEY TRACT UNIT 1

SAN ANTONIO, TEXAS

SANITARY SEWER NOTES

PLAT NO. 22-11800482
JOB NO. 11100-97
DATE MARCH 2023
DESIGNER AA
CHECKED VS DRAWN AA
SHEET C5.11

Date: Mar 30, 2023, 5:08pm User ID: aatry
File: P:\111\00\97\Design\Civil\SSDT-1110097.dwg

THIS DOCUMENT HAS BEEN PRODUCED FROM MATERIAL THAT WAS STORED AND/OR TRANSMITTED ELECTRONICALLY AND MAY HAVE BEEN INADVERTENTLY ALTERED. RELY ONLY ON FINAL HARDCOPY MATERIALS BEARING THE CONSULTANT'S ORIGINAL SIGNATURE AND SEAL. AERIAL IMAGERY PROVIDED BY GOOGLE© UNLESS OTHERWISE NOTED. Imagery © 2016,CAPCOG,Digital Globe,Texas OrthoImagery Program, USDA Farm Service Agency.

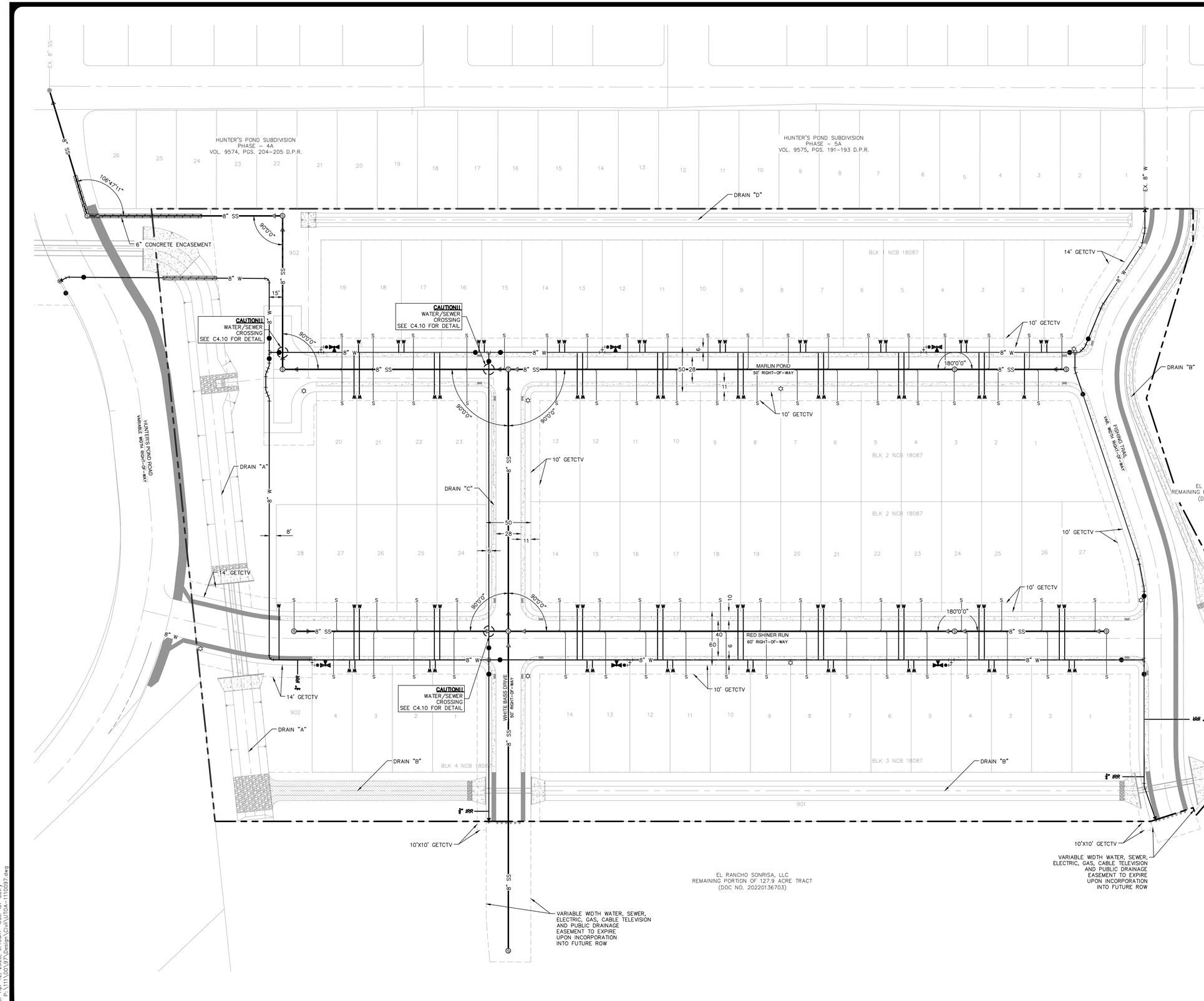

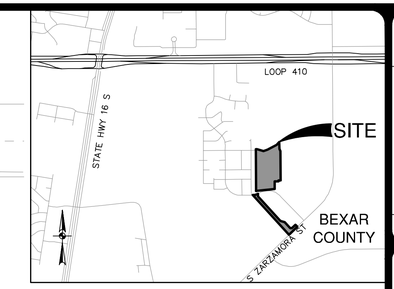

LOCATION MAP

NOT–TO–SCALE

SCALE: 1"= 50'

0' 50' 100' 150'

UTILITY LEGEND

PROJECT LIMITS	
EXISTING WATER	W
EXISTING SEWER	SS
PROPOSED SEWER	SS MANHOLE
PROPOSED WATER	W FIRE HYDRANT
PROPOSED WYE & LATERAL	S
SINGLE WATER SERVICE	W
DUAL WATER SERVICE	W S
STREET LIGHTS	SL
GAS, ELECTRIC, TELEPHONE & CABLE TELEVISION EASEMENT	GETCTV

CONDUIT NOTES:

1. CONTRACTOR SHALL INSTALL PERMANENT MARKERS IN PROPOSED CURB WHERE CONDUITS CROSS THE ROADWAY (BOTH SIDES).
2. CONDUITS SHALL BE PVC WITH MINIMUM BURY OF 36 INCHES BELOW PROPOSED FINISHED GRADE. SCHEDULE 80 TO BE USED FOR CPS CONDUITS, ALL OTHER CONDUITS ARE SCHEDULE 40.
3. ALL CONDUITS SHALL BE EXTENDED BEHIND CURBS OR PROPOSED SIDEWALKS A MINIMUM OF 3 FEET AND CAPPED FOR FUTURE USE.
4. ALL CONDUIT SLEEVES TO BE USED FOR ELECTRIC, GAS, OR TELECOMMUNICATION UTILITY CROSSINGS SHALL BE INSTALLED TO MEET OR EXCEED DESIGN REQUIREMENTS FOR THE UTILITY AGENCY WHICH THEY ARE SERVING, INCLUDING BUT NOT LIMITED TO THE DEPTH, TRENCH PLACEMENT, AND PROXIMITY TO OTHER UTILITIES. THE CONTRACTOR IS SOLELY RESPONSIBLE FOR VERIFYING AND INSTALLING THE CONDUIT SLEEVES TO MEET THESE SPECIFICATIONS INCLUDING COORDINATING WITH THE UTILITY AGENCY FOR ANY REQUIRED INSPECTIONS

TRENCH EXCAVATION SAFETY PROTECTION:

CONTRACTOR AND/ OR CONTRACTOR'S INDEPENDENTLY RETAINED EMPLOYEE OR STRUCTURAL DESIGN/ GEOTECHNICAL/ SAFETY/EQUIPMENT CONSULTANT, IF ANY, SHALL REVIEW THESE PLANS AND ANY AVAILABLE GEOTECHNICAL INFORMATION AND THE ANTICIPATED INSTALLATION SITES WITHIN THE PROJECT WORK AREA IN ORDER TO IMPLEMENT CONTRACTOR'S TRENCH EXCAVATION SAFETY PROTECTION SYSTEMS, PROGRAMS AND /OR PROCEDURES FOR THE PROJECT DESCRIBED IN THE CONTRACT DOCUMENTS. THE CONTRACTOR'S IMPLEMENTATION OF THESE SYSTEMS, PROGRAMS AND/OR PROCEDURES SHALL PROVIDE FOR ADEQUATE TRENCH EXCAVATION SAFETY PROTECTION THAT COMPLY WITH AS A MINIMUM, OSHA STANDARDS FOR TRENCH EXCAVATIONS. SPECIFICALLY, CONTRACTOR AND/OR CONTRACTOR'S INDEPENDENTLY RETAINED EMPLOYEE OR SAFETY CONSULTANT SHALL IMPLEMENT A TRENCH SAFETY PROGRAM IN ACCORDANCE WITH OSHA STANDARDS GOVERNING THE PRESENCE AND ACTIVITIES OF INDIVIDUALS WORKING IN AND AROUND TRENCH EXCAVATION.

CAUTION!!

CONTRACTOR SHALL BE REQUIRED TO LOCATE ALL PUBLIC OR PRIVATE UTILITIES INCLUDING BUT NOT LIMITING TO: WATER, SEWER, TELEPHONE AND FIBER OPTIC LINES, SITE LIGHTING ELECTRIC, SECONDARY ELECTRIC, PRIMARY ELECTRICAL DUCTBANKS, LANDSCAPE IRRIGATION FACILITIES, AND GAS LINES. ANY UTILITY CONFLICTS THAT ARISE SHOULD BE COMMUNICATED TO THE ENGINEER IMMEDIATELY AND PRIOR TO CONSTRUCTION. THE CONTRACTOR SHALL CONTACT 1–800–DIG–TESS A MINIMUM OF 48 HOURS PRIOR TO THE START OF CONSTRUCTION. ANY DAMAGE TO EXISTING UTILITIES SHALL BE THE SOLE RESPONSIBILITY OF THE CONTRACTOR AND THE REPAIR SHALL BE AT CONTRACTOR'S SOLE EXPENSE WHETHER THE UTILITY IS SHOWN ON THESE PLANS OR NOT.

NO.	REVISION	DATE

STATE OF TEXAS
JON D. ADAME
82567
LICENSED
PROFESSIONAL ENGINEER
4-12-23

PAPE-DAWSON ENGINEERS
SAN ANTONIO I AUSTIN I HOUSTON I FORT WORTH I DALLAS
2000 NW LOOP 410 I SAN ANTONIO, TX 78213 I 210.375.9000
TEXAS ENGINEERING FIRM #470 I TEXAS SURVEYING FIRM #10028800

SMILEY TRACT UNIT 1
SAN ANTONIO, TEXAS
OVERALL UTILITY PLAN

PLAT NO. 22-11800482
JOB NO. 11100–97
DATE APRIL 2023
DESIGNER AA
CHECKED VC DRAWN AB
SHEET C6.00

Date: Apr 12, 2023, 9:16am User ID: oatry
File: P:\111\00\97\Design\Civil\UTOA-1110097.dwg

THIS DOCUMENT HAS BEEN PRODUCED FROM MATERIAL THAT WAS STORED AND/OR TRANSMITTED ELECTRONICALLY AND MAY HAVE BEEN INADVERTENTLY ALTERED. RELY ONLY ON FINAL HARDCOPY MATERIALS BEARING THE CONSULTANT'S ORIGINAL SIGNATURE AND SEAL. AERIAL IMAGERY PROVIDED BY GOOGLE© UNLESS OTHERWISE NOTED. Imagery © 2016,CAPCOG,Digital Globe,Texas OrthoImagery Program, USDA Farm Service Agency.

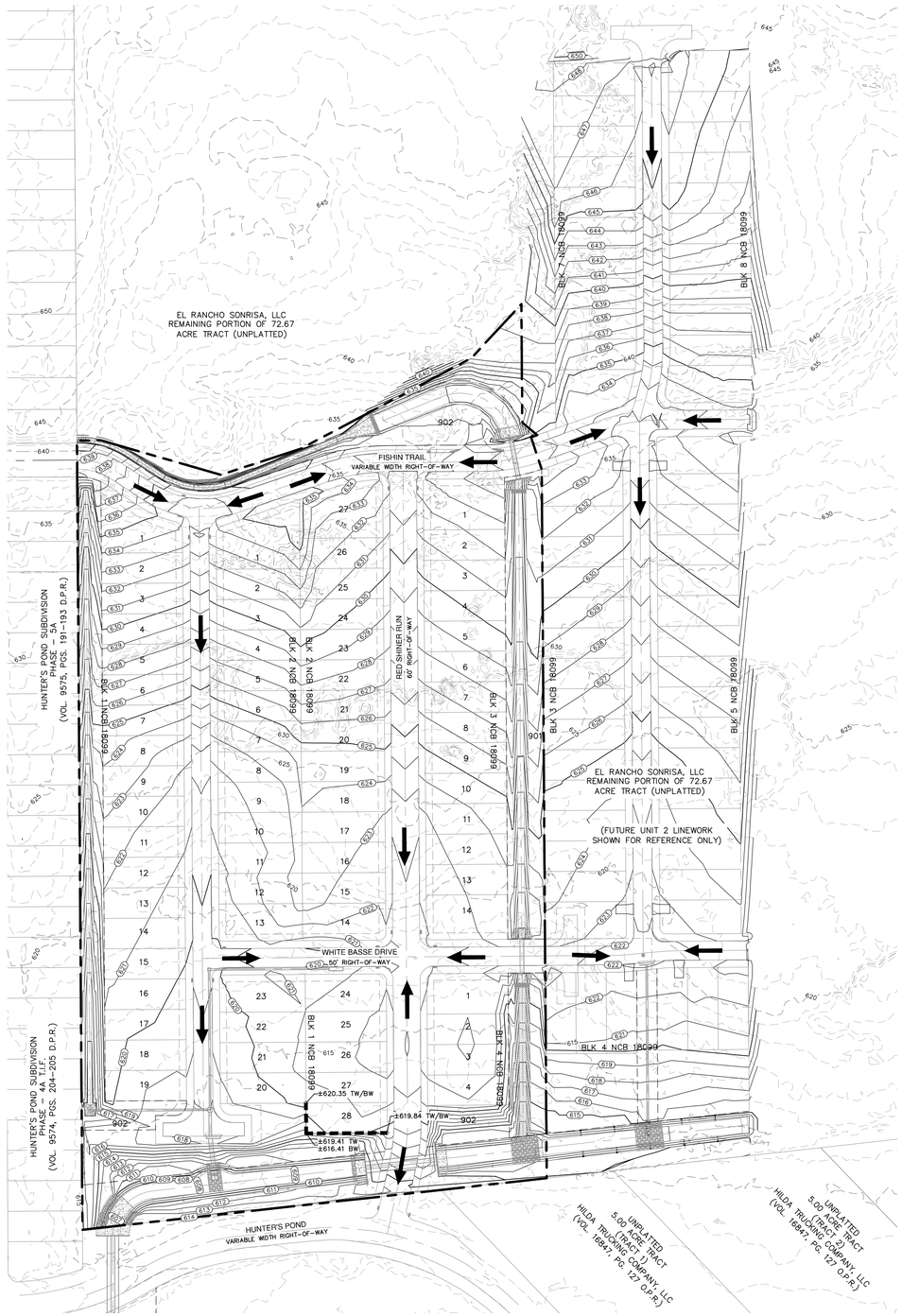

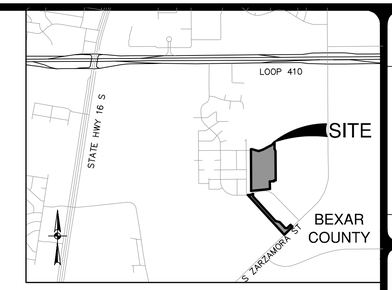

LOCATION MAP

NOT-TO-SCALE

SCALE: 1"= 100'

0' 100' 200' 300'

GRADING LEGEND

PROJECT LIMITS	
100 YR FLOODPLAIN	
EXISTING CONTOUR	976
PROPOSED CONTOUR	970
FLOW ARROW (EXISTING)	
FLOW ARROW (PROPOSED)	
MINIMUM FINISHED FLOOR ELEVATION	FF = XXXX.XX
TREES TO REMAIN	

GRADING NOTES:

1. ALL MATERIALS AND CONSTRUCTION PROCEDURES WITHIN THIS SCOPE OF WORK WHERE NOT SPECIFICALLY COVERED IN THE SPECIFICATIONS OR GEOTECHNICAL REPORT SHALL CONFORM TO ALL APPLICABLE CITY, COUNTY AND TXDOT STANDARD SPECIFICATIONS FOR PUBLIC WORKS CONSTRUCTION (LATEST EDITION).

2. SITE PREPARATION, GRADING, EXCAVATION AND FILL SHALL BE PERFORMED IN ACCORDANCE WITH THE PROJECT GEOTECHNICAL REPORT AND SPECIFICATIONS.

3. ALL SELECT FILL MATERIAL PROVIDED SHALL BE APPROVED BY THE GEOTECHNICAL ENGINEER PRIOR TO PLACING AND COMPACTING.

4. ALL ELEVATIONS AND PROPOSED CONTOURS SHOWN ON THIS GRADING PLAN REFLECT FINISHED GRADES. THE THICKNESS OF PAVING, BASE, GRASS, TOPSOIL, AND MULCH MUST BE SUBTRACTED TO OBTAIN SUBGRADE ELEVATIONS.

5. THE CONTRACTOR SHALL IMMEDIATELY NOTIFY THE ENGINEER OF ANY QUESTIONS THAT MAY ARISE CONCERNING THE INTENT, PLACEMENT, OR LIMITS OF DIMENSIONS OR GRADES NECESSARY FOR CONSTRUCTION OF THIS PROJECT.

6. THE CONTRACTOR SHALL VERIFY THE SUITABILITY OF ALL EXISTING AND PROPOSED SITE CONDITIONS INCLUDING GRADES AND DIMENSIONS BEFORE COMMENCEMENT OF CONSTRUCTION. THE ENGINEER SHALL BE NOTIFIED IMMEDIATELY OF ANY DISCREPANCIES.

7. THE CONTRACTOR SHALL BE RESPONSIBLE FOR ACQUIRING ALL PERMITS, TESTS, APPROVALS AND ACCEPTANCES REQUIRED TO COMPLETE CONSTRUCTION OF THIS PROJECT.

8. THE CONTRACTOR SHALL REMOVE TOP SOIL, GRASS, ROOTS, DEBRIS, ETC. AND DISPOSE OFF SITE THOSE MATERIALS NOT SUITABLE FOR EMBANKMENT AND TOPSOIL. CLEAN STRIPPINGS AND TOPSOIL MAY BE STOCKPILED ON SITE FOR REUSE IN A LOCATION SPECIFIED BY THE OWNER.

9. THE SITE CONTRACTOR SHALL BE RESPONSIBLE FOR SITE STABILIZATION. ALL DISTURBED AREAS SHALL BE REVEGETATED IN ACCORDANCE WITH PROJECT SPECIFICATIONS AND TPDES/SWPPP REQUIREMENTS. REFERENCE THE LANDSCAPE ARCHITECT'S PLAN, IF APPLICABLE.

10. THE CONTRACTOR SHALL TAKE ALL NECESSARY PRECAUTIONS (USE OF SILT FENCES, ETC.) TO KEEP DRAINAGE AND SILT FROM WASHING ONTO ADJACENT PROPERTY, STREETS, OR DRAINAGE WAYS. CONTRACTOR SHALL IMMEDIATELY REMOVE SILT/DEBRIS WHICH WASHES OFFSITE OR INTO EXISTING STORM DRAIN SYSTEMS. (SEE SWPPP PLANS & TPDES BOOK).

11. THE CONTRACTOR SHALL OBTAIN GRADES SHOWN HEREON WITHIN +/- ONE-TENTH (0.10) FOOT.

12. IN PROPOSED PAVING AREAS, STREET DESIGN PLANS SHALL CONTROL. ALL EARTHEN SLOPES SHALL BE A MAXIMUM OF 3:1 AND A MINIMUM OF 1.0% UNLESS OTHERWISE SHOWN.

13. THE CONTRACTOR SHALL PROVIDE A SMOOTH TRANSITION BETWEEN EXISTING SITE AND PROPOSED IMPROVEMENTS.

14. THE CONTRACTOR SHALL BE RESPONSIBLE FOR RESTORING TO ITS ORIGINAL, OR BETTER, CONDITION ANY DAMAGE DONE TO EXISTING TREES, BUILDINGS, UTILITIES, FENCES, PAVEMENT, CURBS, OR DRIVEWAYS (NO SEPARATE PAY ITEMS).

15. THE CONTRACTOR SHALL EXERCISE EXTREME CAUTION IN WORKING NEAR UTILITIES, GAS LINES, SEWER, OR EXISTING APPURTENANCES. PRIOR TO PERFORMING ANY EXCAVATION, CONTRACTOR SHALL CONTACT ALL UTILITY COMPANIES AND ASSURE HIMSELF THAT ALL UTILITIES HAVE BEEN ADEQUATELY LOCATED AND IDENTIFIED. THE ENGINEER SHALL BE NOTIFIED IF ANY UTILITY CONFLICTS ARE DISCOVERED.

16. UTILITIES SHOWN ON THE PLANS ARE FROM INFORMATION SOURCES AVAILABLE AT THE TIME OF DESIGN BUT MAY NOT REPRESENT ALL EXISTING UTILITIES ON SITE. THE CONTRACTOR WILL BE RESPONSIBLE FOR DETERMINING EXACT LOCATION OF ALL UTILITIES WHETHER SHOWN ON THE PLANS OR NOT. THE CONTRACTOR SHALL UNCOVER EXISTING UTILITIES PRIOR TO CONSTRUCTION AND VERIFY SIZE, GRADE AND LOCATION. THE CONTRACTOR SHALL NOTIFY THE ENGINEER IMMEDIATELY OF ANY DEVIATIONS FROM PLANS PRIOR TO BEGINNING CONSTRUCTION. ANY DAMAGE TO EXISTING UTILITIES, WHETHER SHOWN ON THE PLANS OR NOT, SHALL BE THE CONTRACTORS RESPONSIBILITY TO REPAIR, AT HIS OWN EXPENSE.

17. POSITIVE DRAINAGE SHALL BE MAINTAINED THROUGHOUT THE SCOPE OF THE PROJECT. DRAINAGE SHALL BE DIRECTED AWAY FROM ALL BUILDING FOUNDATIONS. CONTRACTOR SHOULD TAKE PRECAUTIONS NOT TO ALLOW ANY PONDING OF WATER.

18. FOR FILL PLACEMENT ON HILL SIDES OR STEEP SLOPE AREAS, THE CONTRACTOR SHALL REFERENCE THE PROJECT SPECIFICATIONS AND GEOTECHNICAL REPORT FOR SPECIAL INSTRUCTIONS REGARDING BENCHING.

19. NO WORK SHALL BE PERFORMED IN A PUBLIC RIGHT-OF-WAY WITHOUT A PERMIT.

NO.	REVISION	DATE

STATE OF TEXAS
JON D. ADAME
82567
LICENSED
PROFESSIONAL ENGINEER

Jon Adame
2-21-24

PAPE-DAWSON ENGINEERS
SAN ANTONIO I AUSTIN I HOUSTON I FORT WORTH I DALLAS
2000 NW LOOP 410 I SAN ANTONIO, TX 78213 I 210.375.9000
TEXAS ENGINEERING FIRM #470 I TEXAS SURVEYING FIRM #10028800

SMILEY TRACT UNIT 1

SAN ANTONIO, TEXAS

OVERALL GRADING PLAN

PLAT NO. 22-11800482
JOB NO. 11100-97
DATE AUGUST 2023
DESIGNER AA
CHECKED VS DRAWN AA
SHEET C7.00

Date: Feb 21, 2024, 2:17pm User ID: aaky
File: P:\111\00\97\Design\Civil\GR0A-11100097.dwg

THIS DOCUMENT HAS BEEN PRODUCED FROM MATERIAL THAT WAS STORED AND/OR TRANSMITTED ELECTRONICALLY AND MAY HAVE BEEN INADVERTENTLY ALTERED. RELY ONLY ON FINAL HARDCOPY MATERIALS BEARING THE CONSULTANT'S ORIGINAL SIGNATURE AND SEAL. AERIAL IMAGERY PROVIDED BY GOOGLE© UNLESS OTHERWISE NOTED. Imagery © 2016,CAPCOG,Digital Globe,Texas Orthoimagery Program, USDA Farm Service Agency.

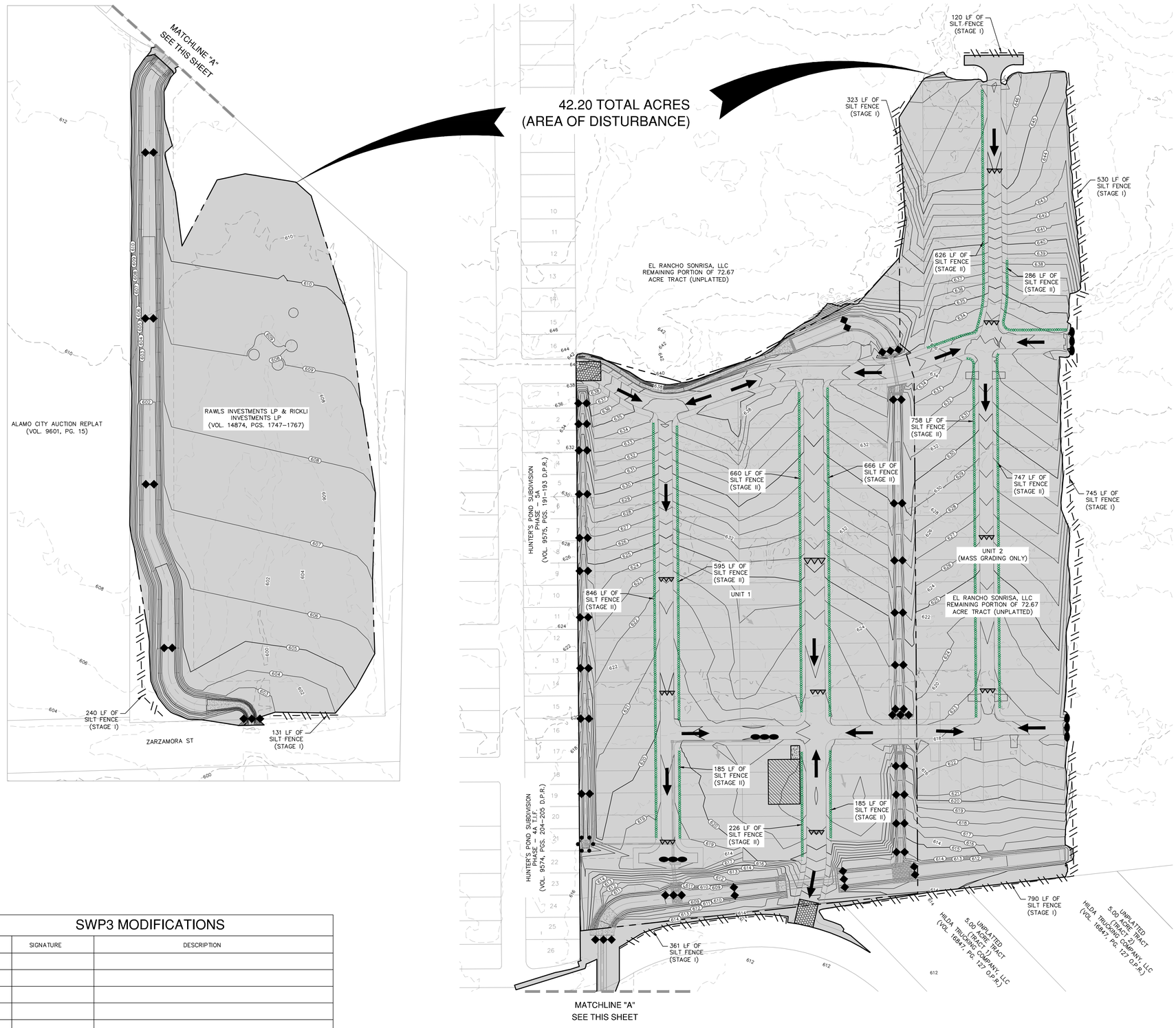

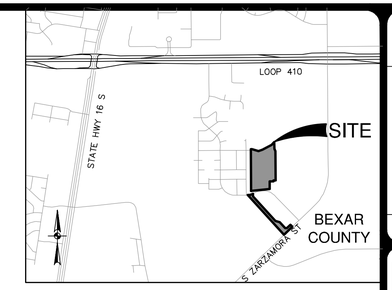

LOCATION MAP

NOT–TO–SCALE

SCALE: 1"= 100'

0' 100' 200' 300'

SWPPP LEGEND

- PROJECT LIMITS
- EXISTING CONTOUR (976)
- PROPOSED CONTOUR (970)
- FLOW ARROW (EXISTING)
- FLOW ARROW (PROPOSED)
- SILT FENCE (STAGE I)
- SILT FENCE (STAGE II)
- ROCK BERM (TO BE REMOVED POST CONSTRUCTION)
- ROCK DAM
- GRAVEL FILTER BAGS
- EARTHEN BERM W/POLYLINER AND SPILLWAY (BERMS ARE TO SPAN ACROSS PROPOSED STREET SECTION APPROX. 28–40 FEET WIDE FROM CURB TO CURB)
- GRATE INLET PROTECTION
- LIMITS OF DISTURBED AREA
- STABILIZED CONSTRUCTION ENTRANCE/EXIT (FIELD LOCATE)
- CONSTRUCTION EQUIPMENT, VEHICLE & MATERIALS STORAGE AREA (FIELD LOCATE)
- CONCRETE TRUCK WASH–OUT PIT (FIELD LOCATE)

GENERAL NOTES

1. DO NOT DISTURB VEGETATED AREAS (TREES, GRASS, WEEDS, BRUSH, ETC.) ANY MORE THAN NECESSARY FOR CONSTRUCTION.

2. CONSTRUCTION ENTRANCE/EXIT LOCATION, CONCRETE WASH–OUT PIT, AND CONSTRUCTION EQUIPMENT AND MATERIAL STORAGE YARD TO BE DETERMINED IN THE FIELD.

3. STORM WATER POLLUTION PREVENTION CONTROLS MAY NEED TO BE MODIFIED IN THE FIELD TO ACCOMPLISH THE DESIRED EFFECT. ALL MODIFICATIONS ARE TO BE NOTED ON THIS EXHIBIT AND SIGNED AND DATED BY THE RESPONSIBLE PARTY.

4. RESTRICT ENTRY/EXIT TO THE PROJECT SITE TO DESIGNATED LOCATIONS BY USE OF ADEQUATE FENCING, IF NECESSARY.

5. ALL STORM WATER POLLUTION PREVENTION CONTROLS ARE TO BE MAINTAINED AND IN WORKING CONDITIONS AT ALL TIMES.

6. FOR A COMPLETE LISTING OF TEMPORARY STORM WATER POLLUTION PREVENTION CONTROLS REFER TO THE TPDES STORM WATER POLLUTION PREVENTION PLAN.

7. STORM WATER POLLUTION PREVENTION STRUCTURES SHOULD BE CONSTRUCTED WITHIN THE SITE BOUNDARIES. SOME OF THESE FEATURES MAY BE SHOWN OUTSIDE THE SITE BOUNDARIES ON THIS PLAN FOR VISUAL CLARITY.

8. AS SOON AS PRACTICAL, ALL DISTURBED SOIL THAT WILL NOT BE COVERED BY IMPERVIOUS COVER SUCH AS PARKWAY AREAS, EASEMENT AREAS, EMBANKMENT SLOPES, ETC. WILL BE STABILIZED PER APPLICABLE PROJECT SPECIFICATIONS.

9. BEST MANAGEMENT PRACTICES MAY BE INSTALLED IN STAGES TO COINCIDE WITH THE DISTURBANCE OF UPGRADIENT AREAS.

10. BEST MANAGEMENT PRACTICES MAY BE REMOVED IN STAGES ONCE THE WATERSHED FOR THAT PORTION CONTROLLED BY THE BEST MANAGEMENT PRACTICES HAS BEEN STABILIZED IN ACCORDANCE WITH TPDES REQUIREMENTS.

11. UPON COMPLETION OF THE PROJECT, INCLUDING SITE STABILIZATION, AND BEFORE FINAL PAYMENT IS ISSUED, CONTRACTOR SHALL REMOVE ALL SEDIMENT AND EROSION CONTROL MEASURES, PAYING SPECIAL ATTENTION TO ROCK BERMS IN DRAINAGE FEATURES.

12. WHERE VEGETATED FILTER STRIPS ARE INDICATED, CONTRACTOR SHALL VERIFY THAT SUFFICIENT VEGETATION EXISTS, OTHERWISE CONTRACTOR SHALL PLACE SILT FENCING IN LIEU OF VEGETATED FILTER STRIP.

13. SHADED AREA DENOTES LIMITS OF DISTURBED AREAS. OTHER AREAS WITHIN THE PROJECT LIMITS, WITH THE EXCEPTION OF A CONSTRUCTION EQUIPMENT AND MATERIAL STORAGE YARD, ARE NOT A PART OF THIS TPDES STORM WATER POLLUTION PREVENTION PLAN (SWP3) AND WILL NOT BE DISTURBED BY CIVIL CONSTRUCTION ACTIVITIES. HOUSE CONSTRUCTION ACTIVITIES WILL REQUIRE A SEPARATE STORM WATER POLLUTION PREVENTION PLAN.

14. PRIOR TO BEGINNING CONSTRUCTION, CONTRACTOR SHALL COORDINATE PLACEMENT OF TEMPORARY BEST MANAGEMENT PRACTICES WITHIN TXDOT RIGHT–OF–WAY WITH TXDOT.

15. CPS ENERGY WILL FUNCTION AS A SECONDARY OPERATOR ON THIS PROJECT AND WILL BE INSTALLING ELECTRIC UTILITIES FOR ON–SITE CONSTRUCTION AND OFF–SITE FEED TO THE PROJECT.

THE ENGINEERING SEAL HAS BEEN AFFIXED TO THIS SHEET ONLY FOR THE PURPOSE OF DEMONSTRATING COMPLIANCE WITH THE TPDES–STORM WATER POLLUTION PREVENTION PLAN (SWP3) REGULATIONS.

THIS SHEET HAS BEEN PREPARED FOR PURPOSES OF THE SWP3 ONLY. ALL OTHER CIVIL ENGINEERING RELATED INFORMATION SHOULD BE ACQUIRED FROM THE APPROPRIATE SHEET IN THE CIVIL IMPROVEMENT PLANS.

EXHIBIT 2

SWP3 MODIFICATIONS

DATE	SIGNATURE	DESCRIPTION

NO.	REVISION	DATE

STATE OF TEXAS
JON D. ADAME
82567
LICENSED PROFESSIONAL ENGINEER

Jon Adame
2-21-24

PAPE-DAWSON ENGINEERS
SAN ANTONIO I AUSTIN I HOUSTON I FORT WORTH I DALLAS
2000 NW LOOP 410 I SAN ANTONIO, TX 78213 I 210.375.9000
TEXAS ENGINEERING FIRM #470 I TEXAS SURVEYING FIRM #10028800

SMILEY TRACT UNIT 1

SAN ANTONIO, TEXAS

STORM WATER POLLUTION PREVENTION PLAN

PLAT NO. 22-11800482
JOB NO. 11100–97
DATE AUGUST 2023
DESIGNER AA
CHECKED VS DRAWN AA
SHEET C8.00

Date: Feb 21, 2024, 2:17pm User ID: ackty
File: P:\111\00\97\Design\Civil\SWPP-11100d97.dwg

THIS DOCUMENT HAS BEEN PRODUCED FROM MATERIAL THAT WAS STORED AND/OR TRANSMITTED ELECTRONICALLY AND MAY HAVE BEEN INADVERTENTLY ALTERED. RELY ONLY ON FINAL HARDCOPY MATERIALS BEARING THE CONSULTANT'S ORIGINAL SIGNATURE AND SEAL. AERIAL IMAGERY PROVIDED BY GOOGLE© UNLESS OTHERWISE NOTED. Imagery © 2016,CAPCOG,Digital Globe,Texas Orthoimagery Program, USDA Farm Service Agency.

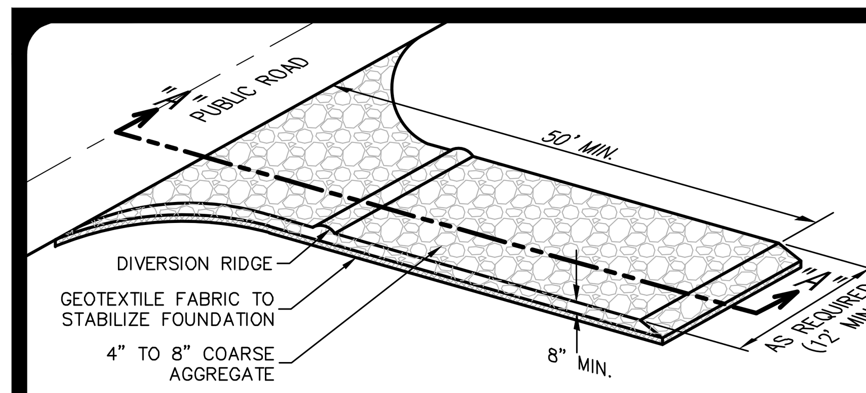

SCHEMATIC OF TEMPORARY CONSTRUCTION ENTRANCE/EXIT

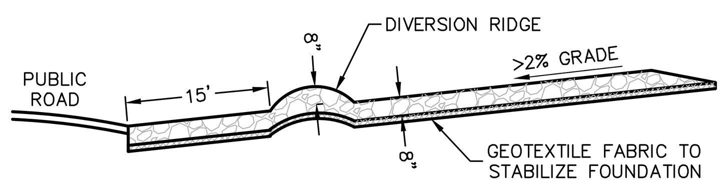

SECTION "A-A" OF A CONSTRUCTION ENTRANCE/EXIT

MATERIALS
1. THE AGGREGATE SHOULD CONSIST OF 4–INCH TO 8–INCH WASHED STONE OVER A STABLE FOUNDATION AS SPECIFIED IN THE PLAN.

2. THE AGGREGATE SHOULD BE PLACED WITH A MINIMUM THICKNESS OF 8–INCHES.

3. THE GEOTEXTILE FABRIC SHOULD BE DESIGNED SPECIFICALLY FOR USE AS A SOIL FILTRATION MEDIA WITH AN APPROXIMATE WEIGHT OF 6 OZ/YD², A MULLEN BURST RATING OF 140 LB/IN², AND AN EQUIVALENT OPENING SIZE GREATER THAN A NUMBER 50 SIEVE.

4. IF A WASHING FACILITY IS REQUIRED, A LEVEL AREA WITH A MINIMUM OF 4–INCH DIAMETER WASHED STONE OR COMMERCIAL ROCK SHOULD BE INCLUDED IN THE PLANS. DIVERT WASTEWATER TO A SEDIMENT TRAP OR BASIN.

INSTALLATION
1. AVOID CURVES ON PUBLIC ROADS AND STEEP SLOPES. REMOVE VEGETATION AND OTHER OBJECTIONABLE MATERIAL FROM THE FOUNDATION AREA. GRADE CROWN FOUNDATION FOR POSITIVE DRAINAGE.

2. THE MINIMUM WIDTH OF THE ENTRANCE/EXIT SHOULD BE 12 FEET OR THE FULL WIDTH OF EXIT ROADWAY, WHICHEVER IS GREATER.

3. THE CONSTRUCTION ENTRANCE SHOULD BE AT LEAST 50 FEET LONG.

4. IF THE SLOPE TOWARD THE ROAD EXCEEDS 2%, CONSTRUCT A RIDGE, 6–INCHES TO 8–INCHES HIGH WITH 3:1 (H:V) SIDE SLOPES, ACROSS THE FOUNDATION APPROXIMATELY 15 FEET FROM THE ENTRANCE TO DIVERT RUNOFF AWAY FROM THE PUBLIC ROAD.

5. PLACE GEOTEXTILE FABRIC AND GRADE FOUNDATION TO IMPROVE STABILITY, ESPECIALLY WHERE WET CONDITIONS ARE ANTICIPATED.

6. PLACE STONE TO DIMENSIONS AND GRADE SHOWN ON PLANS. LEAVE SURFACE SMOOTH AND SLOPE FOR DRAINAGE.

7. DIVERT ALL SURFACE RUNOFF AND DRAINAGE FROM THE STONE PAD TO A SEDIMENT TRAP OR BASIN.

8. INSTALL PIPE UNDER PAD AS NEEDED TO MAINTAIN PROPER PUBLIC ROAD DRAINAGE.

COMMON TROUBLE POINTS
1. INADEQUATE RUNOFF CONTROL–SEDIMENT WASHES ONTO PUBLIC ROAD.

2. STONE TOO SMALL OR GEOTEXTILE FABRIC ABSENT, RESULTS IN MUDDY CONDITION AS STONE IS PRESSED INTO SOIL.

3. PAD TOO SHORT FOR HEAVY CONSTRUCTION TRAFFIC–EXTEND PAD BEYOND THE MINIMUM 50–FOOT LENGTH AS NECESSARY.

4. PAD NOT FLARED SUFFICIENTLY AT ROAD SURFACE, RESULTS IN MUD BEING TRACKED ON TO ROAD AND POSSIBLE DAMAGE TO ROAD.

5. UNSTABLE FOUNDATION – USE GEOTEXTILE FABRIC UNDER PAD AND/OR IMPROVE FOUNDATION DRAINAGE.

INSPECTION AND MAINTENANCE GUIDELINES
1. THE ENTRANCE SHOULD BE MAINTAINED IN A CONDITION, WHICH WILL PREVENT TRACKING OR FLOWING OF SEDIMENT ONTO PUBLIC RIGHTS–OF–WAY. THIS MAY REQUIRE PERIODIC TOP DRESSING WITH ADDITIONAL STONE AS CONDITIONS DEMAND AND REPAIR AND/OR CLEANOUT OF ANY MEASURES USED TO TRAP SEDIMENT.

2. ALL SEDIMENT SPILLED, DROPPED, WASHED OR TRACKED ONTO PUBLIC RIGHTS–OF–WAY SHOULD BE REMOVED IMMEDIATELY BY CONTRACTOR.

3. WHEN NECESSARY, WHEELS SHOULD BE CLEANED TO REMOVE SEDIMENT PRIOR TO ENTRANCE ONTO PUBLIC RIGHT–OF–WAY.

4. WHEN WASHING IS REQUIRED, IT SHOULD BE DONE ON AN AREA STABILIZED WITH CRUSHED STONE THAT DRAINS INTO AN APPROVED SEDIMENT TRAP OR SEDIMENT BASIN.

5. ALL SEDIMENT SHOULD BE PREVENTED FROM ENTERING ANY STORM DRAIN, DITCH OR WATER COURSE BY USING APPROVED METHODS.

STABILIZED CONSTRUCTION ENTRANCE/EXIT DETAIL

NOT–TO–SCALE

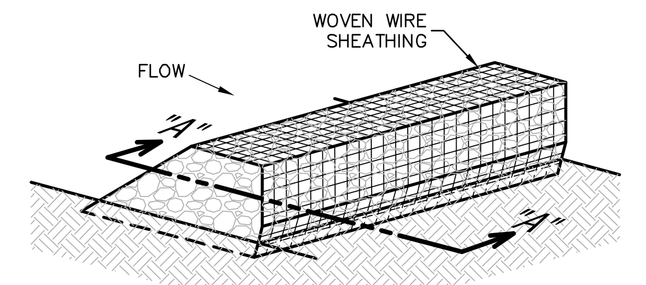

ISOMETRIC PLAN VIEW

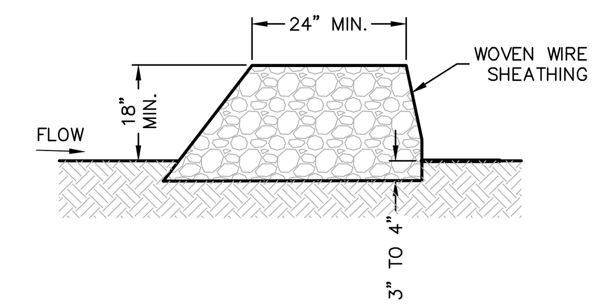

SECTION "A-A"

ROCK BERMS
THE PURPOSE OF A ROCK BERM IS TO SERVE AS A CHECK DAM IN AREAS OF CONCENTRATED FLOW, TO INTERCEPT SEDIMENT–LADEN RUNOFF, DETAIN THE SEDIMENT AND RELEASE THE WATER IN SHEET FLOW. THE ROCK BERM SHOULD BE USED WHEN THE CONTRIBUTING DRAINAGE AREA IS LESS THAN 5 ACRES. ROCK BERMS ARE USED IN AREAS WHERE THE VOLUME OF RUNOFF IS TOO GREAT FOR A SILT FENCE TO CONTAIN. THEY ARE LESS EFFECTIVE FOR SEDIMENT REMOVAL THAN SILT FENCES, PARTICULARLY FOR FINE PARTICLES, BUT ARE ABLE TO WITHSTAND HIGHER FLOWS THAN A SILT FENCE. AS SUCH, ROCK BERMS ARE OFTEN USED IN AREAS OF CHANNEL FLOWS (DITCHES, GULLIES, ETC.). ROCK BERMS ARE MOST EFFECTIVE AT REDUCING BED LOAD IN CHANNELS AND SHOULD NOT BE SUBSTITUTED FOR OTHER EROSION AND SEDIMENT CONTROL MEASURES FARTHER UP THE WATERSHED.

INSPECTION AND MAINTENANCE GUIDELINES
1. INSPECTION SHOULD BE MADE WEEKLY AND AFTER EACH RAINFALL BY THE RESPONSIBLE PARTY. FOR INSTALLATIONS IN STREAMBEDS, ADDITIONAL DAILY INSPECTIONS SHOULD BE MADE.

2. REMOVE SEDIMENT AND OTHER DEBRIS WHEN BUILDUP REACHES 6 INCHES AND DISPOSE OF THE ACCUMULATED SILT IN AN APPROVED MANNER THAT WILL NOT CAUSE ANY ADDITIONAL SILTATION.

3. REPAIR ANY LOOSE WIRE SHEATHING.

4. THE BERM SHOULD BE RESHAPED AS NEEDED DURING INSPECTION.

5. THE BERM SHOULD BE REPLACED WHEN THE STRUCTURE CEASES TO FUNCTION AS INTENDED DUE TO SILT ACCUMULATION AMONG THE ROCKS, WASHOUT, CONSTRUCTION TRAFFIC DAMAGE, ETC.

6. THE ROCK BERM SHOULD BE LEFT IN PLACE UNTIL ALL UPSTREAM AREAS ARE STABILIZED AND ACCUMULATED SILT REMOVED.

MATERIALS
1. THE BERM STRUCTURE SHOULD BE SECURED WITH A WOVEN WIRE SHEATHING HAVING MAXIMUM OPENING OF 1 INCH AND A MINIMUM WIRE DIAMETER OF 20 GAUGE GALVANIZED AND SHOULD BE SECURED WITH SHOAT RINGS.

2. CLEAN, OPEN GRADED 3–INCH TO 5–INCH DIAMETER ROCK SHOULD BE USED, EXCEPT IN AREAS WHERE HIGH VELOCITIES OR LARGE VOLUMES OF FLOW ARE EXPECTED, WHERE 5–INCH TO 8–INCH DIAMETER ROCKS MAY BE USED.

INSTALLATION
1. LAY OUT THE WOVEN WIRE SHEATHING PERPENDICULAR TO THE FLOW LINE. THE SHEATHING SHOULD BE 20 GAUGE WOVEN WIRE MESH WITH 1 INCH OPENINGS.

2. BERM SHOULD HAVE A TOP WIDTH OF 2 FEET MINIMUM WITH SIDE SLOPES BEING 2:1 (H:V) OR FLATTER.

3. PLACE THE ROCK ALONG THE SHEATHING AS SHOWN IN THE DIAGRAM TO A HEIGHT NOT LESS THAN 18".

4. WRAP THE WIRE SHEATHING AROUND THE ROCK AND SECURE WITH TIE WIRE SO THAT THE ENDS OF THE SHEATHING OVERLAP AT LEAST 2 INCHES, AND THE BERM RETAINS ITS SHAPE WHEN WALKED UPON.

5. BERM SHOULD BE BUILT ALONG THE CONTOUR AT ZERO PERCENT GRADE OR AS NEAR AS POSSIBLE.

6. THE ENDS OF THE BERM SHOULD BE TIED INTO EXISTING UPSLOPE GRADE AND THE BERM SHOULD BE BURIED IN A TRENCH APPROXIMATELY 3 TO 4 INCHES DEEP TO PREVENT FAILURE OF THE CONTROL.

COMMON TROUBLE POINTS
1. INSUFFICIENT BERM HEIGHT OR LENGTH (RUNOFF QUICKLY ESCAPES OVER THE TOP OR AROUND THE SIDES OF BERM).

2. BERM NOT INSTALLED PERPENDICULAR TO FLOW LINE (RUNOFF ESCAPING AROUND ONE SIDE).

ROCK BERM DETAIL

NOT–TO–SCALE

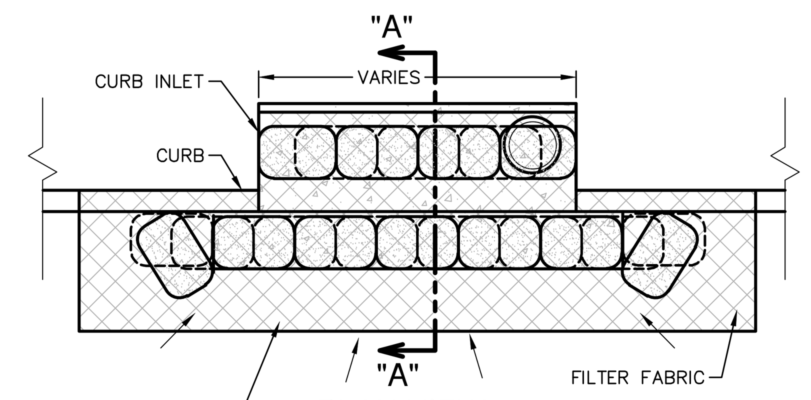

PLAN VIEW

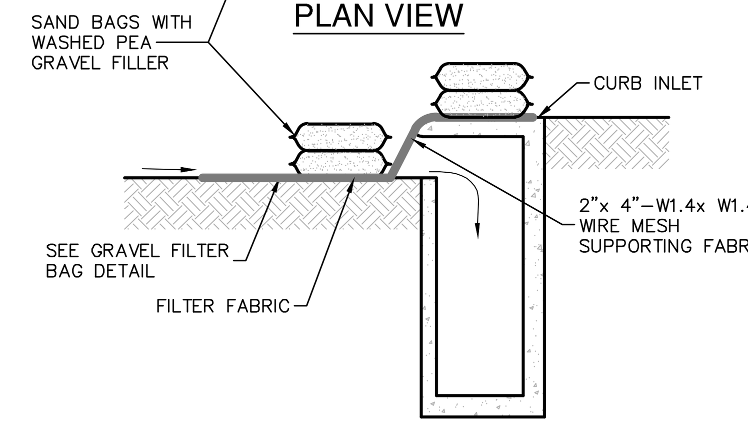

SECTION "A-A"

GENERAL NOTES
1. CONTRACTOR TO INSTALL 2"x4"–W1.4xW1.4 WIRE MESH SUPPORTING FILTER FABRIC OVER THE INLET OPENING. FABRIC MUST BE SECURED TO WIRE BACKING WITH CLIPS OR WIRE TIES AT THIS LOCATION. SAND BAGS FILLED WITH WASHED PEA GRAVEL SHOULD BE PLACED ON TOP OF WIRE MESH ON TOP OF THE INLET AS SHOWN ON THIS DETAIL TO HOLD WIRE MESH IN PLACE. SANDBAGS FILLED WITH WASHED PEA GRAVEL SHOULD ALSO BE PLACED ALONG THE GUTTER AS SHOWN ON THIS DETAIL TO HOLD WIRE MESH IN PLACE. SAND BAGS TO BE STACKED TO FORM A CONTINUOUS BARRIER AROUND INLETS.

2. THE BAGS SHOULD BE TIGHTLY ABUTTED AGAINST EACH OTHER TO PREVENT RUNOFF FROM FLOWING BETWEEN THE BAGS.

INSPECTION AND MAINTENANCE GUIDELINES
1. INSPECTION SHOULD BE MADE WEEKLY AND AFTER EACH RAINFALL. REPAIR OR REPLACEMENT SHOULD BE MADE PROMPTLY AS NEEDED BY THE CONTRACTOR.

2. REMOVE SEDIMENT WHEN BUILDUP REACHES A DEPTH OF 3 INCHES. REMOVED SEDIMENT SHOULD BE DEPOSITED IN A SUITABLE AREA AND IN SUCH A MANNER THAT IT WILL NOT ERODE.

3. CHECK PLACEMENT OF DEVICE TO PREVENT GAPS BETWEEN DEVICE AND CURB.

4. INSPECT FILTER FABRIC AND PATCH OR REPLACE IF TORN OR MISSING.

5. STRUCTURES SHOULD BE REMOVED AND THE AREA STABILIZED ONLY AFTER THE REMAINING DRAINAGE AREA HAS BEEN PROPERLY STABILIZED.

BAGGED GRAVEL CURB INLET PROTECTION DETAIL

NOT–TO–SCALE

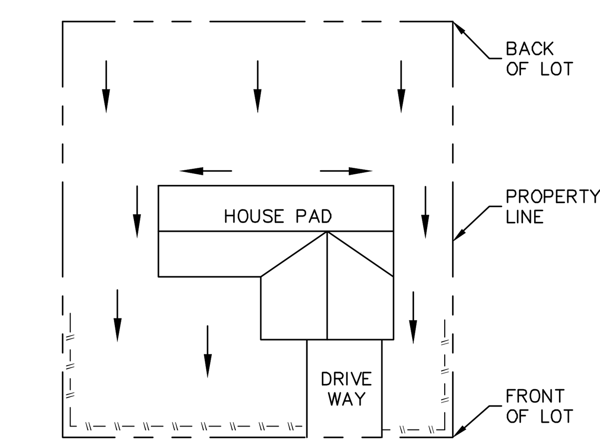

LOT TYPE-A

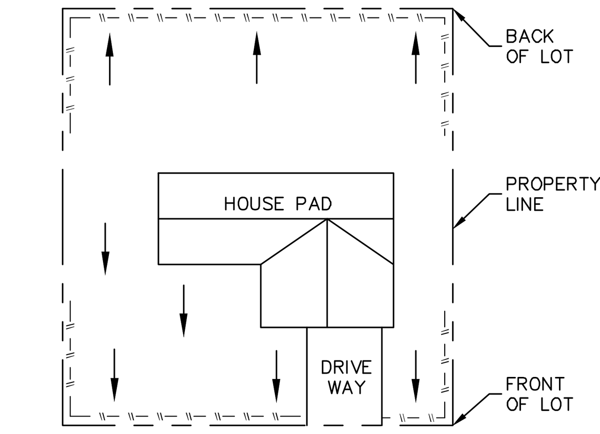

LOT TYPE-B

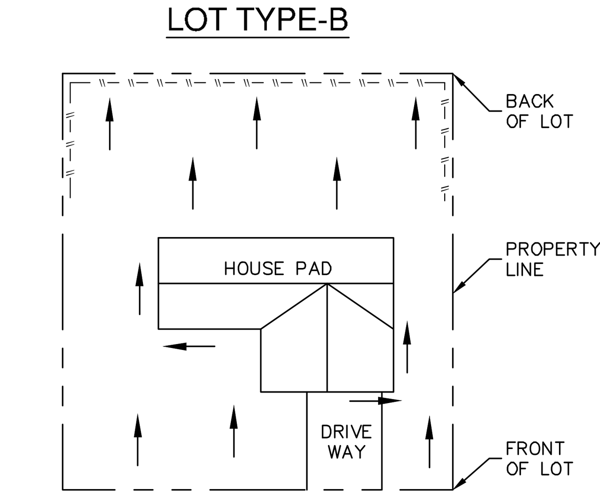

LOT TYPE-C

NOTE: SILT FENCE TO BE INSTALLED PER THESE DETAILS AND LOCATED ON THE DOWNGRADIENT SIDE OF EACH LOT LINE OR LIMITS OF CLEARING AS GENERALLY SHOWN ON THE OVERALL SITE PLAN.

LEGEND
SILT FENCE
DRAINAGE FLOW

TYPICAL HOUSE LOT LAYOUTS

NOT–TO–SCALE

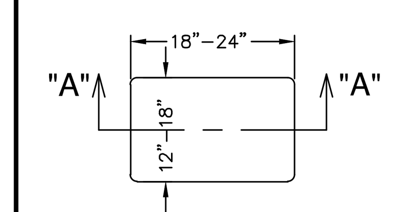

PLAN VIEW

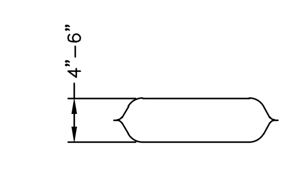

SECTION "A-A"

NOTES:
1. THE FILTER BAG MATERIAL SHALL BE MADE OF POLYPROPYLENE, POLYETHYLENE OR POLYAMIDE WOVEN FABRIC, MIN. UNIT WEIGHT OF 4 OUNCES/SY, HAVE A MULLEN BURST STRENGTH EXCEEDING 300 PSI AND ULTRAVIOLET STABILITY EXCEEDING 70%.

2. THE FILTER BAG SHALL BE FILLED WITH CLEAN, MEDIUM WASHED PEA GRAVEL TO COARSE GRAVEL (0.31 TO 0.75 INCH DIAMETER).

3. SAND SHALL NOT BE USED TO FILL THE FILTER BAGS.

GRAVEL FILTER BAG DETAIL

NOT–TO–SCALE

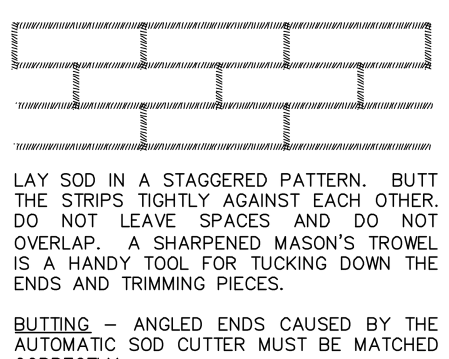

BUTTING – ANGLED ENDS CAUSED BY THE AUTOMATIC SOD CUTTER MUST BE MATCHED CORRECTLY.

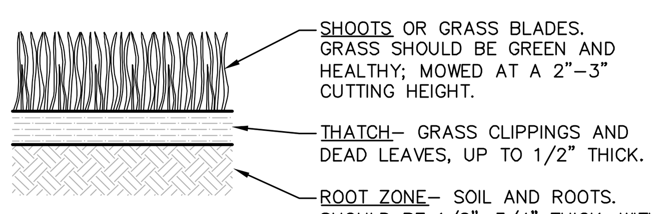

APPEARANCE OF GOOD SOD

NOTES:
1. ROLL SOD IMMEDIATELY TO ACHIEVE FIRM CONTACT WITH THE SOIL.

2. WATER TO A DEPTH OF 4" AS NEEDED. WATER WELL AS SOON AS THE SOD IS LAID.

3. MOW WHEN THE SOD IS ESTABLISHED – IN 2–3 WEEKS. SET THE MOWER HIGH (2"–3").

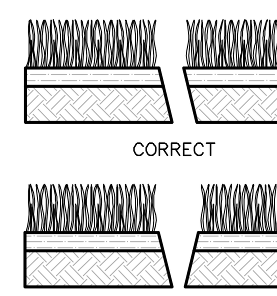

SOD INSTALLATION

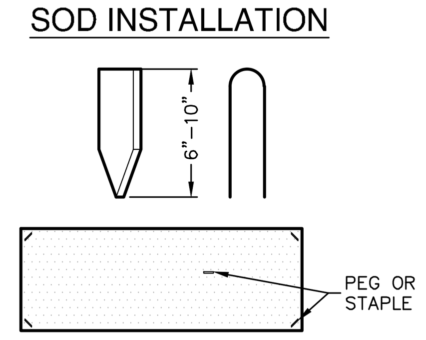

USE PEGS OR STAPLES TO FASTEN SOD FIRMLY – AT THE ENDS OF STRIPS AND IN THE CENTER, OR EVERY 3–4 FEET IF THE STRIPS ARE LONG. WHEN READY TO MOW, DRIVE PEGS OR STAPLES FLUSH WITH THE GROUND.

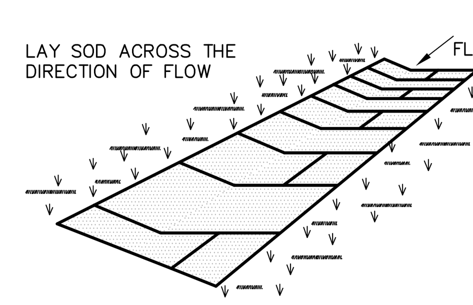

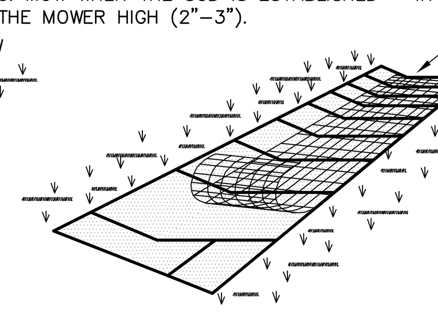

IN CRITICAL AREAS, SECURE SOD WITH NETTING. USE STAPLES.

MATERIALS
1. SOD SHOULD BE MACHINE CUT AT A UNIFORM SOIL THICKNESS OF 3/4" INCH (± 1/4" INCH) AT THE TIME OF CUTTING. THIS THICKNESS SHOULD EXCLUDE SHOOT GROWTH AND THATCH.

2. PIECES OF SOD SHOULD BE CUT TO THE SUPPLIER'S STANDARD WIDTH AND LENGTH, WITH A MAXIMUM ALLOWABLE DEVIATION IN ANY DIMENSION OF 5%. TORN OR UNEVEN PADS SHOULD NOT BE ACCEPTABLE.

3. STANDARD SIZE SECTIONS OF SOD SHOULD BE STRONG ENOUGH TO SUPPORT THEIR OWN WEIGHT AND RETAIN THEIR SIZE AND SHAPE WHEN SUSPENDED FROM A FIRM GRASP ON ONE END OF THE SECTION.

4. SOD SHOULD BE HARVESTED, DELIVERED, AND INSTALLED WITHIN A PERIOD OF 36 HOURS.

SITE PREPARATION
1. PRIOR TO SOIL PREPARATION, AREAS TO BE SODDED SHOULD BE BROUGHT TO FINAL GRADE IN ACCORDANCE WITH THE APPROVED PLAN.

2. THE SURFACE SHOULD BE CLEARED OF ALL TRASH, DEBRIS AND OF ALL ROOTS, BRUSH, WIRE, GRADE STAKES AND OTHER OBJECTS THAT WOULD INTERFERE WITH PLANTING, FERTILIZING OR MAINTENANCE OPERATIONS.

3. FERTILIZE ACCORDING TO SOIL TESTS. FERTILIZER NEEDS CAN BE DETERMINED BY A SOIL TESTING LABORATORY OR REGIONAL RECOMMENDATIONS CAN BE MADE BY COUNTY AGRICULTURAL EXTENSION AGENTS. FERTILIZER SHOULD BE WORKED INTO THE SOIL TO A DEPTH OF 3 INCHES WITH A DISC, SPRINGTOOTH HARROW OR OTHER SUITABLE EQUIPMENT. ON SLOPING LAND, THE FINAL HARROWING OR DISCING OPERATION SHOULD BE ON THE CONTOUR.

INSTALLATION IN CHANNELS
1. SOD STRIPS IN WATERWAYS SHOULD BE LAID PERPENDICULAR TO THE DIRECTION OF FLOW. CARE SHOULD BE TAKEN TO BUTT ENDS OF STRIPS TIGHTLY (SEE FIGURE ABOVE).

2. AFTER ROLLING OR TAMPING, SOD SHOULD BE PEGGED OR STAPLED TO RESIST WASHOUT DURING THE ESTABLISHMENT PERIOD. MESH OR OTHER NETTING MAY BE PEGGED OVER THE SOD FOR EXTRA PROTECTION IN CRITICAL AREAS.

GENERAL INSTALLATION (VA. DEPT. OF CONSERVATION, 1992)
1. SOD SHOULD NOT BE CUT OR LAID IN EXCESSIVELY WET OR DRY WEATHER. SOD ALSO SHOULD NOT BE LAID ON SOIL SURFACES THAT ARE FROZEN.

2. DURING PERIODS OF HIGH TEMPERATURE, THE SOIL SHOULD BE LIGHTLY IRRIGATED IMMEDIATELY PRIOR TO LAYING THE SOD, TO COOL THE SOIL AND REDUCE ROOT BURNING AND DIEBACK.

3. THE FIRST ROW OF SOD SHOULD BE LAID IN A STRAIGHT LINE WITH SUBSEQUENT ROWS PLACED PARALLEL TO AND BUTTING TIGHTLY AGAINST EACH OTHER. LATERAL JOINTS SHOULD BE STAGGERED TO PROMOTE MORE UNIFORM GROWTH AND STRENGTH. CARE SHOULD BE EXERCISED TO ENSURE THAT SOD IS NOT STRETCHED OR OVERLAPPED AND THAT ALL JOINTS ARE BUTTED TIGHT IN ORDER TO PREVENT VOIDS WHICH WOULD CAUSE DRYING OF THE ROOTS (SEE FIGURE ABOVE).

4. ON SLOPES 3:1 OR GREATER, OR WHEREVER EROSION MAY BE A PROBLEM, SOD SHOULD BE LAID WITH STAGGERED JOINTS AND SECURED BY STAPLING OR OTHER APPROVED METHODS. SOD SHOULD BE INSTALLED WITH THE LENGTH PERPENDICULAR TO THE SLOPE (ON CONTOUR).

5. AS SODDING OF CLEARLY DEFINED AREAS IS COMPLETED, SOD SHOULD BE ROLLED OR TAMPED TO PROVIDE FIRM CONTACT BETWEEN ROOTS AND SOIL.

6. AFTER ROLLING, SOD SHOULD BE IRRIGATED TO A DEPTH SUFFICIENT THAT THE UNDERSIDE OF THE SOD PAD AND THE SOIL 4 INCHES BELOW THE SOD IS THOROUGHLY WET.

7. UNTIL SUCH TIME A GOOD ROOT SYSTEM BECOMES DEVELOPED, IN THE ABSENCE OF ADEQUATE RAINFALL, WATERING SHOULD BE PERFORMED AS OFTEN AS NECESSARY TO MAINTAIN MOIST SOIL TO A DEPTH OF AT LEAST 4 INCHES.

8. THE FIRST MOWING SHOULD NOT BE ATTEMPTED UNTIL THE SOD IS FIRMLY ROOTED, USUALLY 2–3 WEEKS. NOT MORE THAN ONE THIRD OF THE GRASS LEAF SHOULD BE REMOVED AT ANY ONE CUTTING.

INSPECTION AND MAINTENANCE GUIDELINES
1. SOD SHOULD BE INSPECTED WEEKLY AND AFTER EACH RAIN EVENT TO LOCATE AND REPAIR ANY DAMAGE.

2. DAMAGE FROM STORMS OR NORMAL CONSTRUCTION ACTIVITIES SUCH AS TIRE RUTS OR DISTURBANCE OF SWALE STABILIZATION SHOULD BE REPAIRED AS SOON AS PRACTICAL.

SOD INSTALLATION DETAIL

NOT–TO–SCALE

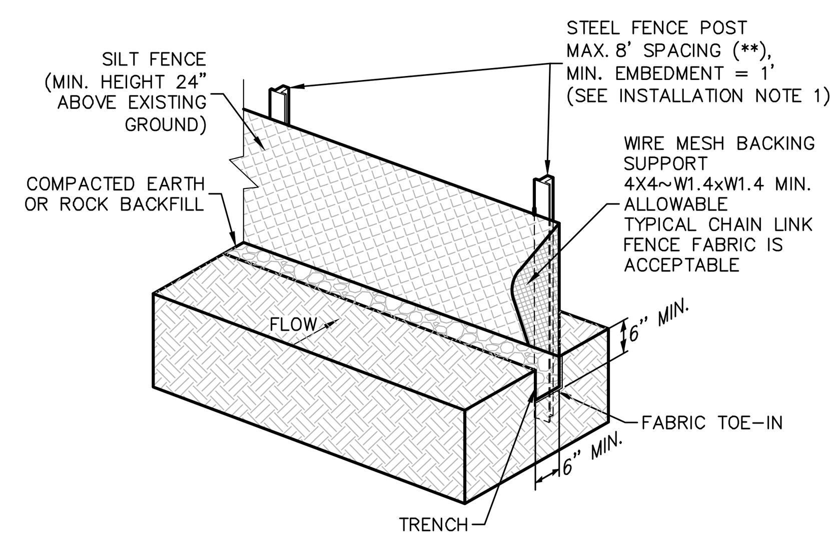

**STEEL POSTS, WHICH SUPPORT THE SILT FENCE, SHOULD BE INSTALLED ON A SLIGHT ANGLE TOWARD THE ANTICIPATED RUNOFF SOURCE. POST MUST BE EMBEDDED A MINIMUM OF 1–FOOT DEEP AND SPACED NOT MORE THAN 8 FEET ON CENTER. WHERE WATER CONCENTRATES, THE MAXIMUM SPACING SHOULD BE 6 FEET. (RG–348, SECTION 1.4.3)

ISOMETRIC PLAN VIEW

SILT FENCE
A SILT FENCE IS A BARRIER CONSISTING OF GEOTEXTILE FABRIC SUPPORTED BY METAL POSTS TO PREVENT SOIL AND SEDIMENT LOSS FROM A SITE. WHEN PROPERLY USED, SILT FENCES CAN BE HIGHLY EFFECTIVE AT CONTROLLING SEDIMENT FROM DISTURBED AREAS. THEY CAUSE RUNOFF TO POND, ALLOWING HEAVIER SOLIDS TO SETTLE OUT. IF NOT PROPERLY INSTALLED, SILT FENCES ARE NOT LIKELY TO BE EFFECTIVE.

THE PURPOSE OF A SILT FENCE IS TO INTERCEPT AND DETAIN WATER–BORN SEDIMENT FROM UNPROTECTED AREAS OF A LIMITED EXTENT. SILT FENCE IS USED DURING THE PERIOD OF CONSTRUCTION NEAR THE PERIMETER OF A DISTURBED AREA TO INTERCEPT SEDIMENT WHILE ALLOWING WATER TO PERCOLATE THROUGH. THIS FENCE SHOULD REMAIN IN PLACE UNTIL THE DISTURBED AREA IS PERMANENTLY STABILIZED. SILT FENCE SHOULD NOT BE USED WHERE THERE IS A CONCENTRATION OF WATER IN A CHANNEL OR DRAINAGE WAY. IF CONCENTRATED FLOW OCCURS AFTER INSTALLATION, CORRECTIVE ACTION MUST BE TAKEN SUCH AS PLACING A ROCK BERM IN THE AREAS OF CONCENTRATED FLOW.

SILT FENCING WITHIN THE SITE MAY BE TEMPORARILY MOVED DURING THE DAY TO ALLOW CONSTRUCTION ACTIVITY PROVIDED IT IS REPLACED AND PROPERLY ANCHORED TO THE GROUND AT THE END OF THE DAY. SILT FENCES ON THE PERIMETER OF THE SITE OR AROUND DRAINAGE WAYS SHOULD NOT BE MOVED AT ANY TIME.

MATERIALS
1. SILT FENCE MATERIAL SHOULD BE POLYPROPYLENE, POLYETHYLENE, OR POLYAMIDE WOVEN OR NONWOVEN FABRIC. THE FABRIC SHOULD BE 36 INCHES, WITH A MINIMUM UNIT WEIGHT OF 4.5 OZ/YD, MULLEN BURST STRENGTH EXCEEDING 190 LB/IN2, ULTRAVIOLET STABILITY EXCEEDING 70%, AND MINIMUM APPARENT OPENING SIZE OF U.S. SIEVE NUMBER 30.

2. FENCE POSTS SHOULD BE MADE OF HOT ROLLED STEEL, AT LEAST 4 FEET LONG WITH TEE OR Y–BAR CROSS SECTION, SURFACE PAINTED OR GALVANIZED, MINIMUM WEIGHT 1.25 LB/FT, AND BRINDELL HARDNESS EXCEEDING 140.

3. WOVEN WIRE BACKING TO SUPPORT THE FABRIC SHOULD BE GALVANIZED 2" X 4" WELDED WIRE, 12 GAUGE MINIMUM.

INSTALLATION
1. STEEL POSTS, WHICH SUPPORT THE SILT FENCE, SHOULD BE INSTALLED ON A SLIGHT ANGLE TOWARD THE ANTICIPATED RUNOFF SOURCE. POSTS MUST BE EMBEDDED A MINIMUM OF 1–FOOT DEEP AND SPACED NOT MORE THAN 8 FEET ON CENTER. WHERE WATER CONCENTRATES, THE MAXIMUM SPACING SHOULD BE 6 FEET.

2. LAY OUT FENCING DOWN–SLOPE OF DISTURBED AREA, FOLLOWING THE CONTOUR AS CLOSELY AS POSSIBLE. THE FENCE SHOULD BE SITED SO THAT THE MAXIMUM DRAINAGE AREA IS ¼ ACRE/100 FEET OF FENCE.

3. THE TOE OF THE SILT FENCE SHOULD BE TRENCHED IN WITH A SPADE OR MECHANICAL TRENCHER, SO THAT THE DOWN–SLOPE FACE OF THE TRENCH IS FLAT AND PERPENDICULAR TO THE LINE OF FLOW. WHERE FENCE CANNOT BE TRENCHED IN (E.G., PAVEMENT OR ROCK OUTCROP), WEIGHT FABRIC FLAP WITH 3 INCHES OF PEA GRAVEL ON UPHILL SIDE TO PREVENT FLOW FROM SEEPING UNDER FENCE.

4. THE TRENCH MUST BE A MINIMUM OF 6 INCHES DEEP AND 6 INCHES WIDE TO ALLOW FOR THE SILT FENCE FABRIC TO BE LAID IN THE GROUND AND BACKFILLED WITH COMPACTED MATERIAL.

5. SILT FENCE SHOULD BE SECURELY FASTENED TO EACH STEEL SUPPORT POST OR TO WOVEN WIRE, WHICH IS IN TURN ATTACHED TO THE STEEL FENCE POST. THERE SHOULD BE A 3–FOOT OVERLAP, SECURELY FASTENED WHERE ENDS OF FABRIC MEET.

6. SILT FENCE SHOULD BE REMOVED WHEN THE SITE IS COMPLETELY STABILIZED SO AS NOT TO BLOCK OR IMPEDE STORM FLOW OR DRAINAGE.

COMMON TROUBLE POINTS
1. FENCE NOT INSTALLED ALONG THE CONTOUR CAUSING WATER TO CONCENTRATE AND FLOW OVER THE FENCE.

2. FABRIC NOT SEATED SECURELY TO GROUND (RUNOFF PASSING UNDER FENCE).

3. FENCE NOT INSTALLED PERPENDICULAR TO FLOW LINE (RUNOFF ESCAPING AROUND SIDES).

4. FENCE TREATING TOO LARGE AN AREA, OR EXCESSIVE CHANNEL FLOW (RUNOFF OVERTOPS OR COLLAPSES FENCE).

INSPECTION AND MAINTENANCE GUIDELINES
1. INSPECT ALL FENCING WEEKLY, AND AFTER RAINFALL.

2. REMOVE SEDIMENT WHEN BUILDUP REACHES 6 INCHES.

3. REPLACE TORN FABRIC OR INSTALL A SECOND LINE OF FENCING PARALLEL TO THE TORN SECTION.

4. REPLACE OR REPAIR SECTIONS CRUSHED OR COLLAPSED IN THE COURSE OF CONSTRUCTION ACTIVITY. IF A SECTION OF FENCE IS OBSTRUCTING VEHICULAR ACCESS, CONSIDER RELOCATING IT TO A SPOT WHERE IT WILL PROVIDE EQUAL PROTECTION, BUT WILL NOT OBSTRUCT VEHICLES. A TRIANGULAR FILTER DIKE MAY BE PREFERABLE TO A SILT FENCE AT COMMON VEHICLE ACCESS POINTS.

5. WHEN CONSTRUCTION IS COMPLETE, THE SEDIMENT SHOULD BE DISPOSED OF IN A MANNER THAT WILL NOT CAUSE ADDITIONAL SILTATION AND THE PRIOR LOCATION OF THE SILT FENCE SHOULD BE REVEGETATED. THE FENCE ITSELF SHOULD BE DISPOSED OF IN AN APPROVED LANDFILL.

SILT FENCE DETAIL

NOT–TO–SCALE

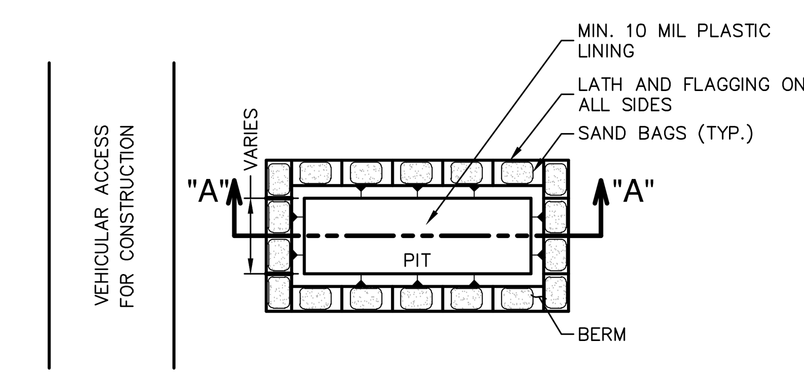

PLAN VIEW

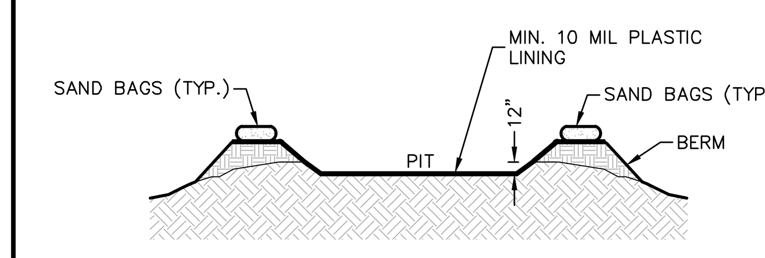

SECTION "A-A"

GENERAL NOTES
1. DETAIL ABOVE ILLUSTRATES MINIMUM DIMENSIONS. PIT CAN BE INCREASED IN SIZE DEPENDING ON EXPECTED FREQUENCY OF USE.

2. WASHOUT PIT SHALL BE LOCATED IN AN AREA EASILY ACCESSIBLE TO CONSTRUCTION TRAFFIC.

3. WASHOUT PIT SHALL NOT BE LOCATED IN AREAS SUBJECT TO INUNDATION FROM STORM WATER RUNOFF.

4. LOCATE WASHOUT AREA AT LEAST 50 FEET FROM SENSITIVE FEATURES, STORM DRAINS, OPEN DITCHES OR WATER BODIES.

5. TEMPORARY CONCRETE WASHOUT FACILITY SHOULD BE CONSTRUCTED WITH SUFFICIENT QUANTITY AND VOLUME TO CONTAIN ALL LIQUID AND CONCRETE WASTE GENERATED BY WASHOUT OPERATIONS.

MATERIALS
PLASTIC LINING MATERIAL SHOULD BE A MINIMUM OF 10 MIL IN POLYETHYLENE SHEETING AND SHOULD BE FREE OF HOLES, TEARS, OR OTHER DEFECTS THAT COMPROMISE THE IMPERMEABILITY OF THE MATERIAL.

MAINTENANCE
1. WHEN TEMPORARY CONCRETE WASHOUT FACILITIES ARE NO LONGER REQUIRED FOR THE WORK, THE HARDENED CONCRETE SHOULD BE REMOVED AND DISPOSED OF.

2. MATERIALS USED TO CONSTRUCT TEMPORARY CONCRETE WASHOUT FACILITIES SHOULD BE REMOVED FROM THE SITE OF THE WORK AND DISPOSED OF.

3. HOLES, DEPRESSIONS OR OTHER GROUND DISTURBANCES CAUSED BY THE REMOVAL OF THE TEMPORARY CONCRETE WASHOUT FACILITIES SHOULD BE BACKFILLED AND REPAIRED.

CONCRETE TRUCK WASHOUT PIT DETAIL

NOT–TO–SCALE

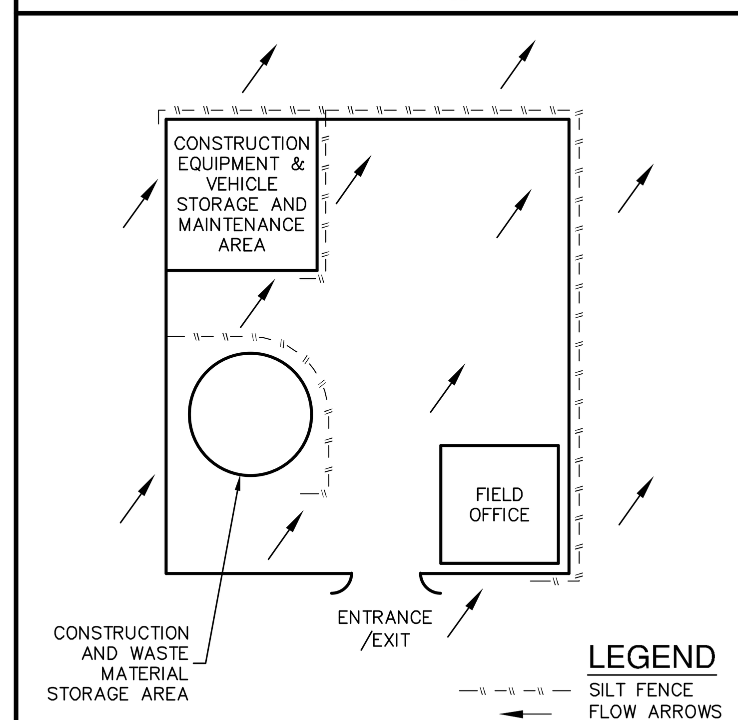

LEGEND
SILT FENCE
FLOW ARROWS

CONSTRUCTION STAGING AREA

NOT–TO–SCALE

THE ENGINEERING SEAL HAS BEEN AFFIXED TO THIS SHEET ONLY FOR THE PURPOSE OF DEMONSTRATING COMPLIANCE WITH THE TPDES–STORM WATER POLLUTION PREVENTION PLAN (SWP3) REGULATIONS.

THIS SHEET HAS BEEN PREPARED FOR PURPOSES OF THE SWP3 ONLY. ALL OTHER CIVIL ENGINEERING RELATED INFORMATION SHOULD BE ACQUIRED FROM THE APPROPRIATE SHEET IN THE CIVIL IMPROVEMENT PLANS.

EXHIBIT 3

NO.	REVISION	DATE

STATE OF TEXAS
JON D. ADAME
82567
LICENSED
PROFESSIONAL ENGINEER
Jon Adame
12-01-23

PAPE-DAWSON ENGINEERS
SAN ANTONIO I AUSTIN I HOUSTON I FORT WORTH I DALLAS
2000 NW LOOP 410 I SAN ANTONIO, TX 78213 I 210.375.9000
TEXAS ENGINEERING FIRM #470 I TEXAS SURVEYING FIRM #10028800

SMILEY TRACT UNIT 1
SAN ANTONIO, TEXAS
STORM WATER POLLUTION PREVENTION PLAN DETAILS

PLAT NO. 22-11800482
JOB NO. 11100–97
DATE AUGUST 2023
DESIGNER AA
CHECKED VS DRAWN AA
SHEET C8.10

Date: Dec 01, 2023, 6:59pm User ID: adavila
File: P:\111\00\97\Design\Civil\SWDT-1110097.dwg

THIS DOCUMENT HAS BEEN PRODUCED FROM MATERIAL THAT WAS STORED AND/OR TRANSMITTED ELECTRONICALLY AND MAY HAVE BEEN INADVERTENTLY ALTERED. RELY ONLY ON FINAL HARDCOPY MATERIALS BEARING THE CONSULTANT'S ORIGINAL SIGNATURE AND SEAL. AERIAL IMAGERY PROVIDED BY GOOGLE© UNLESS OTHERWISE NOTED. Imagery © 2016,CAPCOG,Digital Globe,Texas Orthoimagery Program, USDA Farm Service Agency.