SPANISH TRAILS-UNIT 2 EAST

SAN ANTONIO, TEXAS

CIVIL CONSTRUCTION PLANS

LOCATION MAP

NOT-TO-SCALE

Sheet List Table

Sheet Title	Sheet Description	Sheet No.
COVER SHEET		C0.00
MASTER DRAINAGE PLAN		C1.00
DRAIN A	PLAN AND PROFILE	C1.01
DRAIN B AND DRAIN C	PLAN AND PROFILE	C1.02
DRAINAGE DETAILS	SHEET 1 OF 2	C1.10
DRAINAGE DETAILS	SHEET 2 OF 2	C1.20
ISLAS RD	PLAN AND PROFILE	C2.00
BARRIADA STREET	PLAN AND PROFILE (STA. 10+00.00 TO 19+50.00)	C2.01
BARRIADA STREET	PLAN AND PROFILE (STA. 19+50.00 TO END)	C2.02
LA BARISTA DRIVE	PLAN AND PROFILE	C2.03
CASITA MIA STREET & PERRITO DRIVE	PLAN AND PROFILE	C2.04
BINIBECA	PLAN AND PROFILE	C2.05
ALMA DRIVE	WIDENING AND SIDEWALK IMPROVEMENTS	C2.06
STREET DETAILS		C2.10
OVERALL SIGNAGE PLAN		C3.00
SIGNAGE DETAILS	SHEET 1 OF 2	C3.10
SIGNAGE DETAILS	SHEET 2 OF 2	C3.20
OVERALL SANITARY SEWER PLAN	SHEET 1 OF 2	C4.00
OVERALL SANITARY SEWER PLAN	SHEET 2 OF 2	C4.01
SANITARY SEWER LINE E	PLAN AND PROFILE (STA. 10+00.00 TO 20+50.00)	C4.02
SANITARY SEWER LINE E	PLAN AND PROFILE (STA. 20+50.00 TO END)	C4.03
SANITARY SEWER LINE F	PLAN AND PROFILE	C4.04
SANITARY SEWER LINE G	PLAN AND PROFILE	C4.05
SANITARY SEWER NOTES		C4.10
SANITARY SEWER DETAILS		C4.20
OVERALL WATER DISTRIBUTION PLAN	SHEET 1 OF 2	C5.00
OVERALL WATER DISTRIBUTION PLAN	SHEET 2 OF 2	C5.01
WATER DISTRIBUTION NOTES		C5.10
WATER DISTRIBUTION DETAILS		C5.20
OVERALL UTILITY PLAN		C6.00
GRADING PLAN		C7.00
STORMWATER POLLUTION PREVENTION PLAN		C8.00
STORMWATER POLLUTION PREVENTION DETAILS		C8.10

PREPARED FOR:

K.B. HOME LONE STAR, INC.
4800 FREDERICKSBURG RD
SAN ANTONIO, TEXAS 78229

DECEMBER 2023

STATE OF TEXAS
REBECCA ANN CARROLL
92666
LICENSED
PROFESSIONAL ENGINEER

PAPE-DAWSON ENGINEERS
SAN ANTONIO I AUSTIN I HOUSTON I FORT WORTH I DALLAS
2000 NW LOOP 410 I SAN ANTONIO, TX 78213 I 210.375.9000
TEXAS ENGINEERING FIRM #470 I TEXAS SURVEYING FIRM #10028800

WASTEWATER COLLECTION LOWER
WASTEWATER TREATMENT DOS RIOS/LEON CREEK

DEVELOPER'S NAME: K.B. HOME LONE STAR, INC.
ADDRESS: 4800 FREDERICKSBURG RD
CITY: SAN ANTONIO STATE: TEXAS ZIP: 78229
PHONE# (210) 301-2886 FAX# (210) 366-2378
SAWS BLOCK MAP# 190562 TOTAL EDU'S 120 TOTAL ACREAGE 20.67
TOTAL LINEAR FOOTAGE OF PIPE: 2562 8"SS PLAT NO. 22-11800121
NUMBER OF LOTS 120 SAWS JOB NO. 22-1628

WATER (SAWS PRESSURE ZONE 828)

DEVELOPER'S NAME: K.B. HOME LONE STAR, INC.
ADDRESS: 4800 FREDERICKSBURG RD
CITY: SAN ANTONIO STATE: TEXAS ZIP: 78229
PHONE# (210) 301-2886 FAX# (210) 366-2378
SAWS BLOCK MAP# 190562 TOTAL EDU'S 120 TOTAL ACREAGE 20.67
TOTAL LINEAR FOOTAGE OF PIPE: 3304 8"W PLAT NO. 22-11800121
NUMBER OF LOTS 120 SAWS JOB NO. 22-1134

SHEET C0.00

PLAT NO. 22-11800121 PD JOB NO. 12044-05 SPANISH TRAILS-UNIT 2 EAST

Date: Dec 04, 2023, 8:43am User ID: gkillebrew
File: P:\120\44\05\Design\Civil\CV120440 5.dwg

THIS DOCUMENT HAS BEEN PRODUCED FROM MATERIAL THAT WAS STORED AND/OR TRANSMITTED ELECTRONICALLY AND MAY HAVE BEEN INADVERTENTLY ALTERED. RELY ONLY ON FINAL HARDCOPY MATERIALS BEARING THE CONSULTANT'S ORIGINAL SIGNATURE AND SEAL. AERIAL IMAGERY PROVIDED BY GOOGLE® UNLESS OTHERWISE NOTED. Imagery © 2015,CAPCOG,Digital Globe,Texas OrthoImagery Program, USDA Farm Service Agency.

Existing Conditions Calculations

Ref. Point	Structure / Description	Drainage Areas #	Area (Ac)	C	Total Flowpath (ft)	Overland/Sheet Flow (Seelye) L_O (FT)	S_O (ft/ft)	T_O* (MIN)	Shallow Concentrated Flow - 1** L_{SC} (FT)	Condition***	Slope (ft/ft)	V_{SC} (FPS)	T_{SC}** (MIN)	Channelized Flow** L_{CH} (FT)	V_{CH} (FPS)	T_{CH}** (MIN)	$T_{C\text{-}TOT}$	Rational Method Q=CIA IDF Curve: CoSA_A14_PA5 Return Year	Intensity (in/hr)	Q (cfs)
1	Curb Inlet/Street Capacity	D	8.79	0.44	890	185	0.015	17	705	S	0.010	2.8	4.2		-	-	21	5	4.38	16.9
																	21	25	6.02	23.3
																	21	100	7.52	29.1
2	Curb Inlet/Street Capacity	E	9.62	0.44	1,050	230	0.013	20	820	S	0.016	3.6	3.8		-	-	23	5	4.18	17.7
																	23	25	5.75	24.3
																	23	100	7.17	30.3
3	Storm Drain	D+E	18.41	0.44	1,050	230	0.013	20	820	S	0.016	3.6	3.8		-	-	23	5	4.18	33.9
																	23	25	5.75	46.6
																	23	100	7.17	58.1

Rational Method Time of Concentration
*Seelye Chart or TR-55 Eqn. 3-3
**As Calculated using Mannings or TR-55 Figure 3-1 or 6 ft/s

$$T_o = \frac{(0.007(n*L)^{0.8})}{(P2^{.5}*S^{.4})} * 60 = \frac{k}{n} R^{2/3} S_o^{1/2}$$

From TR-55 Figure 3-1**

$$k = 1.486\ ft^{1/3}/s$$

S: For Streets: n = 0.018, R = 0.2 (Adapted from Mannings)
P: For Paved: n = 0.025, R = 0.2
U: For Unpaved: n = 0.05, R = 0.4
D: For Default: v = 6 fps

Proposed Conditions Calculations

Ref. Point	Structure / Description	Drainage Areas #	Area (Ac)	C	Total Flowpath (ft)	Overland/Sheet Flow (Seelye) L_O (FT)	S_O (ft/ft)	T_O* (MIN)	Shallow Concentrated Flow - 1** L_{SC} (FT)	Condition***	Slope (ft/ft)	V_{SC} (FPS)	T_{SC}** (MIN)	Channelized Flow** L_{CH} (FT)	V_{CH} (FPS)	T_{CH}** (MIN)	$T_{C\text{-}TOT}$	Rational Method Q=CIA IDF Curve: CoSA_A14_PA4 Return Year	Intensity (in/hr)	Q (cfs)
1	Curb Inlet/Street Capacity	D	8.79	0.77	890	185	0.015	17	705	S	0.010	2.8	4.2		-	-	21	5	4.40	29.8
																	21	25	6.05	40.9
																	21	100	7.52	50.9
2	Curb Inlet/Street Capacity	E	9.62	0.77	1,050	230	0.013	20	820	S	0.016	3.6	3.8		-	-	23	5	4.21	31.2
																	23	25	5.77	42.7
																	23	100	7.17	53.1
3	Storm Drain	D+E	18.41	0.77	1,050	230	0.013	20	820	S	0.016	3.6	3.8		-	-	23	5	4.21	59.7
																	23	25	5.77	81.8
																	23	100	7.17	101.6

Rational Method Time of Concentration
*Seelye Chart or TR-55 Eqn. 3-3
**As Calculated using Mannings or TR-55 Figure 3-1 or 6 ft/s

$$T_o = \frac{(0.007(n*L)^{0.8})}{(P2^{.5}*S^{.4})} * 60 = \frac{k}{n} R^{2/3} S_o^{1/2}$$

From TR-55 Figure 3-1**

$$k = 1.486\ ft^{1/3}/s$$

S: For Streets: n = 0.018, R = 0.2 (Adapted from Mannings)
P: For Paved: n = 0.025, R = 0.2
U: For Unpaved: n = 0.05, R = 0.4
D: For Default: v = 6 fps

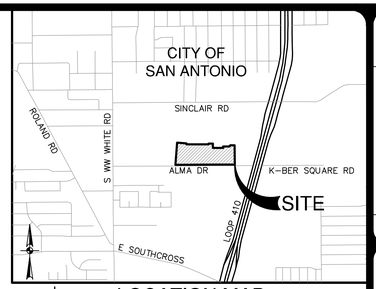

LOCATION MAP
NOT-TO-SCALE

SCALE: 1"= 100'
0' 100' 200' 300'

MASTER DRAINAGE LEGEND

- UNIT BOUNDARY
- 100 YR FEMA FLOODPLAIN
- DRAINAGE AREA BOUNDARY
- Lo=246' — OVERLAND FLOW PATH
- Lsc=246' — SHALLOW CONCENTRATED FLOW PATH
- Lc=246' — CONCENTRATED FLOW PATH
- 690 — EXISTING CONTOUR
- 11 — DRAINAGE CALCULATION POINT
- A,B,C — LOT GRADING

NO.	REVISION	DATE

3/12/2024

STATE OF TEXAS
REBECCA ANN CARROLL
92666
LICENSED PROFESSIONAL ENGINEER

PAPE-DAWSON ENGINEERS
SAN ANTONIO I AUSTIN I HOUSTON I FORT WORTH I DALLAS
2000 NW LOOP 410 I SAN ANTONIO, TX 78213 I 210.375.9000
TEXAS ENGINEERING FIRM #470 I TEXAS SURVEYING FIRM #10028800

SPANISH TRAILS-UNIT 2 EAST
SAN ANTONIO, TEXAS
MASTER DRAINAGE PLAN

PLAT NO. 22-11800121
JOB NO. 12044-05
DATE MARCH 2024
DESIGNER AC
CHECKED DRAWN AC
SHEET C1.00

Date: Mar 12, 2024, 11:36am User ID: gkilbebrew
File: P:\120\44\05\Design\Civil\DRMP\204405.dwg

THIS DOCUMENT HAS BEEN PRODUCED FROM MATERIAL THAT WAS STORED AND/OR TRANSMITTED ELECTRONICALLY AND MAY HAVE BEEN INADVERTENTLY ALTERED. RELY ONLY ON FINAL HARDCOPY MATERIALS BEARING THE CONSULTANT'S ORIGINAL SIGNATURE AND SEAL. AERIAL IMAGERY PROVIDED BY GOOGLE© UNLESS OTHERWISE NOTED. Imagery © 2016,CAPCOG,Digital Globe,Texas Orthoimagery Program, USDA Farm Service Agency.

1 - 42" UFCMP
STA. 1+25.00 TO 3+17.48
HYDRAULIC CALCULATION

Q25 = 81.80 CFS
n = 0.013
S = 2.85%
Sf = 0.66%
dn = 3.50'
Vn = 8.50 FPS

1 - 30" RCP
STA. 3+42.16 TO 4+03.39
HYDRAULIC CALCULATION

Q25 = 40.90 CFS
n = 0.013
S = 1.00%
Sf = 0.99%
dn = 2.44'
Vn = 8.39 FPS

1 - 30" RCP
STA. 7+76.91 TO 11+66.54
HYDRAULIC CALCULATION

Q25 = 40.90 CFS
n = 0.013
S = 0.90%
Sf = 0.90%
dn = 2.46'
Vn = 8.36 FPS

1 - 36" RCP
STA. 3+19.98 TO 3+37.36
HYDRAULIC CALCULATION

Q25 = 40.90 + (42.70/2) = 62.25 CFS
n = 0.013
S = 1.00%
Sf = 0.87%
dn = 2.61'
Vn = 9.53 FPS

1 - 30" RCP
STA. 4+08.39 TO 7+71.91
HYDRAULIC CALCULATION

Q25 = 40.90 CFS
n = 0.013
S = 0.90%
Sf = 0.90%
dn = 2.19'
Vn = 8.97 FPS

1 - 24" RCP
STA. 11+71.54 TO 11+90.79
HYDRAULIC CALCULATION

Q25 = 40.90/2 = 20.45 CFS
n = 0.013
S = 0.60%
Sf = 0.82%
dn = 2.00'
Vn = 6.51 FPS

HYDRAULIC CALCULATIONS–2–10' CURB INLETS

TOTAL Q = 40.9 CFS (20.45 CFS EACH INLET)

Q_{25} = 20.45 CFS

$Q_{25} = CA\sqrt{2gh}$ (ORIFICE FLOW EQN.)

A = L(0.52), h = 0.50, g = 32.2, c = 0.70

$$L = \frac{20.45\ \text{CFS}}{(0.70)\ (0.52)\sqrt{2\ (32.2)\ (0.50)}}$$

L = 9.90 FT USE 1 ~ 10 FT CURB INLET EACH SIDE

CHECK WITH WEIR FORMULA

$$h = \left(\frac{Q}{(CL)}\right)^{2/3} = \left(\frac{20.45}{(3.087)\ (10)}\right)^{2/3} = 0.76\ \text{FT.}$$

h = 0.76 < 0.79 OK

HYDRAULIC CALCULATIONS–2–15' CURB INLETS

TOTAL Q_{25} = 42.7 CFS (21.35 CFS EACH INLET)

Q_{25} = 21.35 CFS

$Q_{25} = CA\sqrt{2gh}$ (ORIFICE FLOW EQN.)

A = L(0.52), h = 0.50, g = 32.2, c = 0.70

$$L = \frac{21.35\ \text{CFS}}{(0.70)\ (0.52)\sqrt{2\ (32.2)\ (0.50)}}$$

L = 10.34 FT USE 1 ~ 15 FT CURB INLET EACH SIDE

CHECK WITH WEIR FORMULA

$$h = \left(\frac{Q}{(CL)}\right)^{2/3} = \left(\frac{21.35}{(3.087)\ (15)}\right)^{2/3} = 0.60\ \text{FT.}$$

h = 0.60 < 0.79 OK

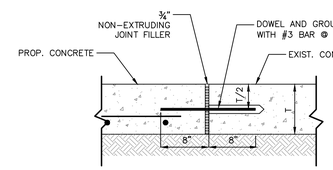

CONCRETE TO CONCRETE JUNCTION DETAIL

NOT-TO-SCALE

SCALE: 1"= 50'
0' 50' 100' 150'

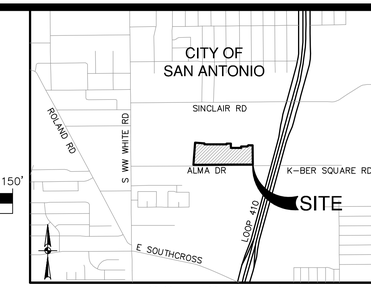

LOCATION MAP

NOT-TO-SCALE

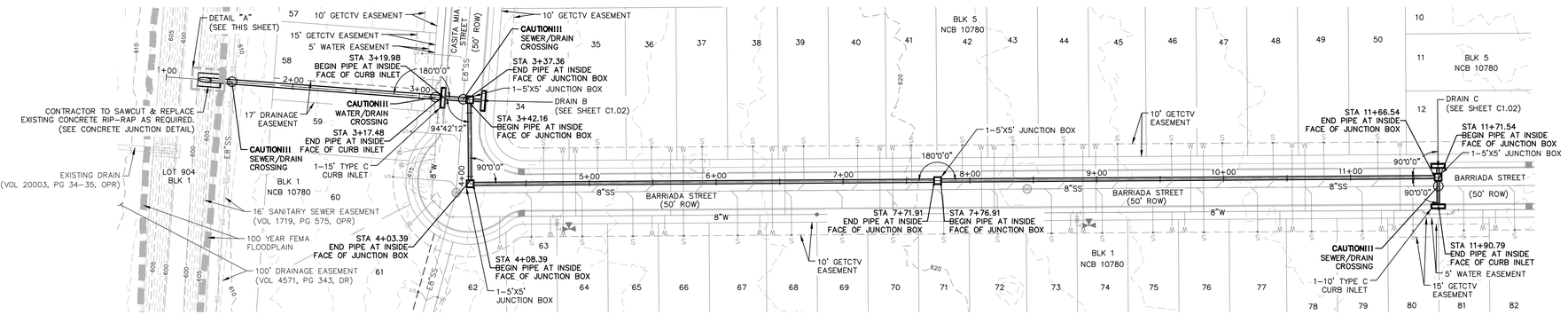

DRAIN "A"
STA. 1+00.00 TO END

VERTICAL SCALE: 1" = 5'
HORIZONTAL SCALE: 1" = 50'

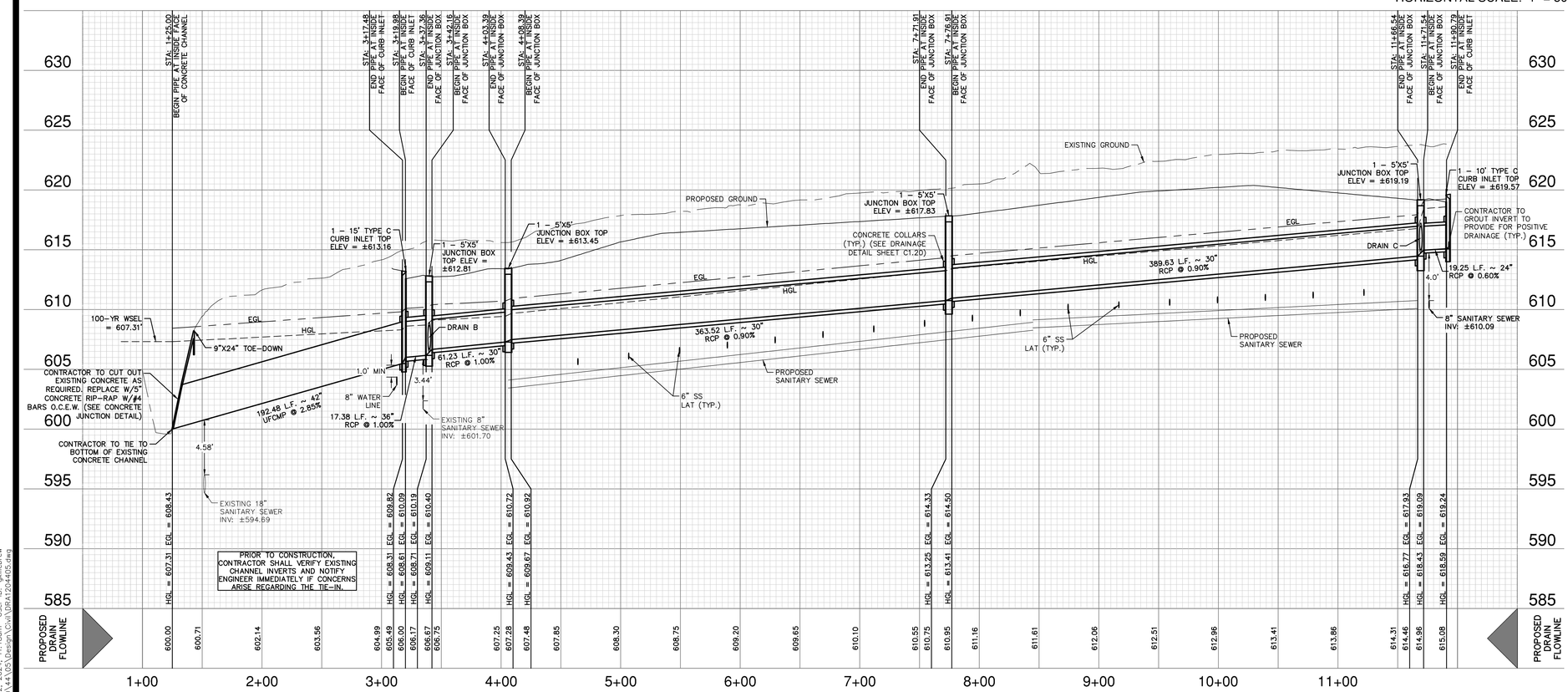

PRIOR TO CONSTRUCTION, CONTRACTOR SHALL VERIFY EXISTING CHANNEL INVERTS AND NOTIFY ENGINEER IMMEDIATELY IF CONCERNS ARISE REGARDING THE TIE-IN.

DRAINAGE LEGEND

PROJECT LIMITS	
EXISTING CONTOUR	690
PROPOSED WATER	W
PROPOSED SEWER	SS
EXISTING WATER	W
EXISTING SEWER	SS
100-YEAR LOMR DFIRM FLOODPLAIN	
100-YEAR (ATLAS-14) ULTIMATE DEVELOPMENT FLOODPLAIN	

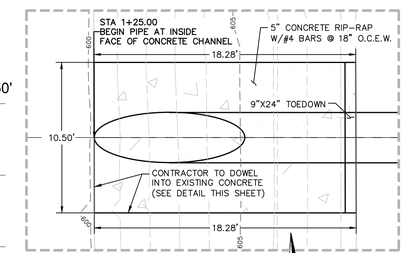

DETAIL "A"

SCALE: 1" = 5'

DRAINAGE & GRADING NOTES:

1. A ROW PERMIT MUST BE OBTAINED BEFORE WORKING IN ROW. CONTRACTOR SHALL COORDINATE A TRAFFIC CONTROL PLAN FOR ALL WORK WITHIN THE ROW. ADDITIONAL WARNING SIGNS MAY BE RECOMMENDED BY THE ENGINEER ONCE THE ROADWAYS ARE CONSTRUCTED.
2. THE CONTRACTOR WILL BE RESPONSIBLE FOR DETERMINING EXACT LOCATION OF ALL UTILITIES AND DRAINAGE STRUCTURES WHETHER SHOWN ON THE PLANS OR NOT. THE CONTRACTOR SHALL UNCOVER EXISTING UTILITIES PRIOR TO CONSTRUCTION TO VERIFY SIZE, GRADE, AND LOCATION. THE CONTRACTOR SHALL NOTIFY THE ENGINEER IMMEDIATELY OF ANY DEVIATIONS FROM PLANS PRIOR TO BEGINNING CONSTRUCTION. ANY DAMAGE TO EXISTING UTILITIES, WHETHER SHOWN ON THE PLANS OR NOT, SHALL BE THE CONTRACTOR'S RESPONSIBILITY TO REPAIR, AT HIS EXPENSE.
3. ALL CONCRETE FOR TXDOT DRAINAGE STRUCTURES SHALL MEET TXDOT SPECIFICATIONS. ALL OTHER CONCRETE SHALL BE CLASS "A" 3000 PSI CYLINDER STRENGTH IN 28 DAYS.
4. REFERENCE DRAINAGE DETAILS FOR PIPE TRENCH DETAILS, BOX CULVERT, HEADWALL, AND WINGWALL CONSTRUCTION DETAILS, AND BOX CULVERT BEDDING AND EXCAVATION LIMITS.
5. CONTRACTOR SHALL GROUT ALL CURB INLETS AND JUNCTION BOXES TO PROVIDE FOR POSITIVE DRAINAGE.
6. EARTHEN CHANNELS WILL BE VEGETATED BY SEEDING OR SODDING. 85% OF THE CHANNEL SURFACE MUST HAVE ESTABLISHED VEGETATION BEFORE THE CITY OF SAN ANTONIO WILL ACCEPT.
7. CONTRACTOR SHALL MATCH TOP OF CHANNEL TO NATURAL GROUND AND MAINTAIN A MINIMUM CHANNEL DEPTH OF "D" AS SHOWN IN THE PROFILE.

TRENCH EXCAVATION SAFETY PROTECTION:

CONTRACTOR AND/ OR CONTRACTOR'S INDEPENDENTLY RETAINED EMPLOYEE OR STRUCTURAL DESIGN/ GEOTECHNICAL/ SAFETY/EQUIPMENT CONSULTANT, IF ANY, SHALL REVIEW THESE PLANS AND ANY AVAILABLE GEOTECHNICAL INFORMATION AND THE ANTICIPATED INSTALLATION SITES WITHIN THE PROJECT WORK AREA IN ORDER TO IMPLEMENT CONTRACTOR'S TRENCH EXCAVATION SAFETY PROTECTION SYSTEMS, PROGRAMS AND /OR PROCEDURES FOR THE PROJECT DESCRIBED IN THE CONTRACT DOCUMENTS. THE CONTRACTOR'S IMPLEMENTATION OF THESE SYSTEMS, PROGRAMS AND/OR PROCEDURES SHALL PROVIDE FOR ADEQUATE TRENCH EXCAVATION SAFETY PROTECTION THAT COMPLY WITH AS A MINIMUM, OSHA STANDARDS FOR TRENCH EXCAVATIONS. SPECIFICALLY, CONTRACTOR AND/OR CONTRACTOR'S INDEPENDENTLY RETAINED EMPLOYEE OR SAFETY CONSULTANT SHALL IMPLEMENT A TRENCH SAFETY PROGRAM IN ACCORDANCE WITH OSHA STANDARDS GOVERNING THE PRESENCE AND ACTIVITIES OF INDIVIDUALS WORKING IN AND AROUND TRENCH EXCAVATION.

CAUTION!!

CONTRACTOR SHALL BE REQUIRED TO LOCATE ALL PUBLIC OR PRIVATE UTILITIES INCLUDING BUT NOT LIMITING TO: WATER, SEWER, TELEPHONE AND FIBER OPTIC LINES, SITE LIGHTING ELECTRIC, SECONDARY ELECTRIC, PRIMARY ELECTRICAL DUCTBANKS, LANDSCAPE IRRIGATION FACILITIES, AND GAS LINES. ANY UTILITY CONFLICTS THAT ARISE SHOULD BE COMMUNICATED TO THE ENGINEER IMMEDIATELY AND PRIOR TO CONSTRUCTION. THE CONTRACTOR SHALL CONTACT 1-800-DIG-TESS A MINIMUM OF 48 HOURS PRIOR TO THE START OF CONSTRUCTION. ANY DAMAGE TO EXISTING UTILITIES SHALL BE THE SOLE RESPONSIBILITY OF THE CONTRACTOR AND THE REPAIR SHALL BE AT CONTRACTOR'S SOLE EXPENSE WHETHER THE UTILITY IS SHOWN ON THESE PLANS OR NOT.

NO.	REVISION	DATE

3/12/2024

STATE OF TEXAS
REBECCA ANN CARROLL
92666
LICENSED
PROFESSIONAL ENGINEER

PAPE-DAWSON ENGINEERS
SAN ANTONIO I AUSTIN I HOUSTON I FORT WORTH I DALLAS
2000 NW LOOP 410 I SAN ANTONIO, TX 78213 I 210.375.9000
TEXAS ENGINEERING FIRM #470 I TEXAS SURVEYING FIRM #10028800

SPANISH TRAILS-UNIT 2 EAST
SAN ANTONIO, TEXAS

DRAIN A
PLAN AND PROFILE

PHASE 2B

PLAT NO. 22-11800121
JOB NO. 12044-05
DATE MARCH 2024
DESIGNER AC
CHECKED ____ DRAWN AC
SHEET C1.01

Date: Mar 12, 2024, 11:18am User ID: gkilebrew
File: P:\120\44\05\Design\Civil\DRA12044005.dwg

THIS DOCUMENT HAS BEEN PRODUCED FROM MATERIAL THAT WAS STORED AND/OR TRANSMITTED ELECTRONICALLY AND MAY HAVE BEEN INADVERTENTLY ALTERED. RELY ONLY ON FINAL HARDCOPY MATERIALS BEARING THE CONSULTANT'S ORIGINAL SIGNATURE AND SEAL. AERIAL IMAGERY PROVIDED BY GOOGLE© UNLESS OTHERWISE NOTED. Imagery © 2016,CAPCOG,Digital Globe,Texas Orthoimagery Program, USDA Farm Service Agency.

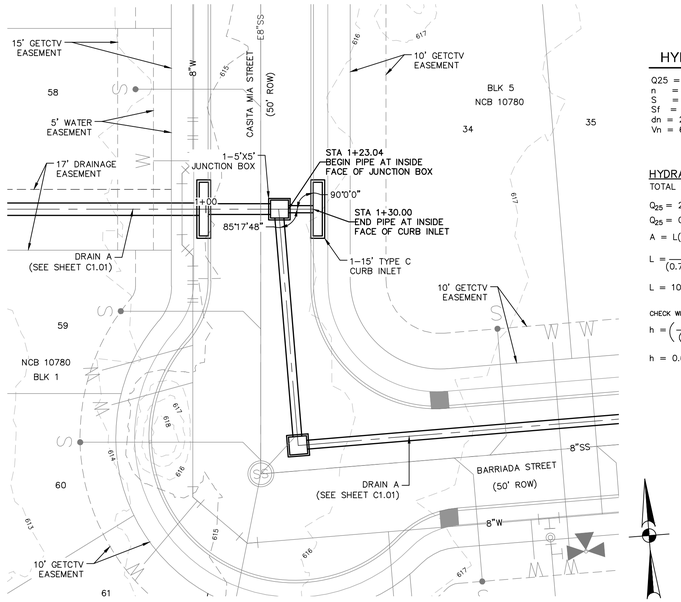

1 - 24" RCP HYDRAULIC CALCULATION

$Q25 = 42.7/2 = 21.35$ CFS
$n = 0.013$
$S = 0.60\%$
$Sf = 0.89\%$
$dn = 2.00'$
$Vn = 6.80$ FPS

HYDRAULIC CALCULATIONS–2–15' CURB INLETS

TOTAL $Q_{25} = 42.7$ CFS (21.35 CFS EACH INLET)

$Q_{25} = 21.35$ CFS

$Q_{25} = CA\sqrt{2gh}$ (ORIFICE FLOW EQN.)

$A = L(0.52)$, $h = 0.50$, $g = 32.2$, $c = 0.70$

$$L = \frac{21.35 \text{ CFS}}{(0.70)\ (0.52)\sqrt{2\ (32.2)\ (0.50)}}$$

L = 10.34 FT USE 1 ~ 15 FT CURB INLET EACH SIDE

CHECK WITH WEIR FORMULA

$$h = \left(\frac{Q}{(CL)}\right)^{2/3} = \left(\frac{21.35}{(3.087)\ (15)}\right)^{2/3} = 0.60 \text{ FT.}$$

h = 0.60 < 0.79 OK

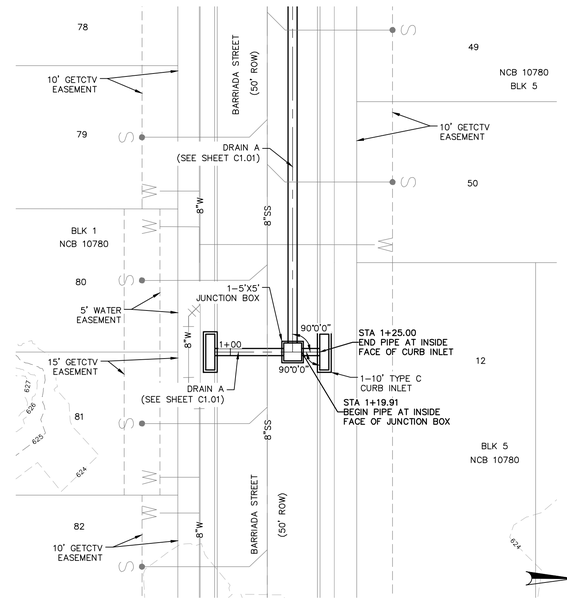

SCALE: 1"= 20'

0' 20' 40' 60'

1 - 24" RCP HYDRAULIC CALCULATION

$Q25 = 40.9/2 = 20.45$ CFS
$n = 0.013$
$S = 0.60\%$
$Sf = 0.82\%$
$dn = 2.00'$
$Vn = 6.51$ FPS

HYDRAULIC CALCULATIONS–2–10' CURB INLETS

TOTAL Q = 40.9 CFS (20.45 CFS EACH INLET)

$Q_{25} = 20.45$ CFS

$Q_{25} = CA\sqrt{2gh}$ (ORIFICE FLOW EQN.)

$A = L(0.52)$, $h = 0.50$, $g = 32.2$, $c = 0.70$

$$L = \frac{20.45 \text{ CFS}}{(0.70)\ (0.52)\sqrt{2\ (32.2)\ (0.50)}}$$

L = 9.90 FT USE 1 ~ 10 FT CURB INLET EACH SIDE

CHECK WITH WEIR FORMULA

$$h = \left(\frac{Q}{(CL)}\right)^{2/3} = \left(\frac{20.45}{(3.087)\ (10)}\right)^{2/3} = 0.76 \text{ FT.}$$

h = 0.76 < 0.79 OK

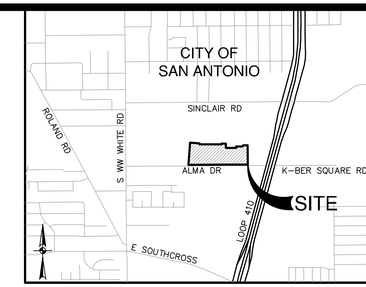

LOCATION MAP

NOT-TO-SCALE

DRAINAGE LEGEND

PROJECT LIMITS	
EXISTING CONTOUR	690
PROPOSED WATER	W
PROPOSED SEWER	SS
EXISTING WATER	W
EXISTING SEWER	SS
100–YEAR LOMR DFIRM FLOODPLAIN	
100–YEAR (ATLAS–14) ULTIMATE DEVELOPMENT FLOODPLAIN	

DRAIN "B"
STA. 1+00.00 TO END

VERTICAL SCALE: 1" = 5'
HORIZONTAL SCALE: 1" = 20'

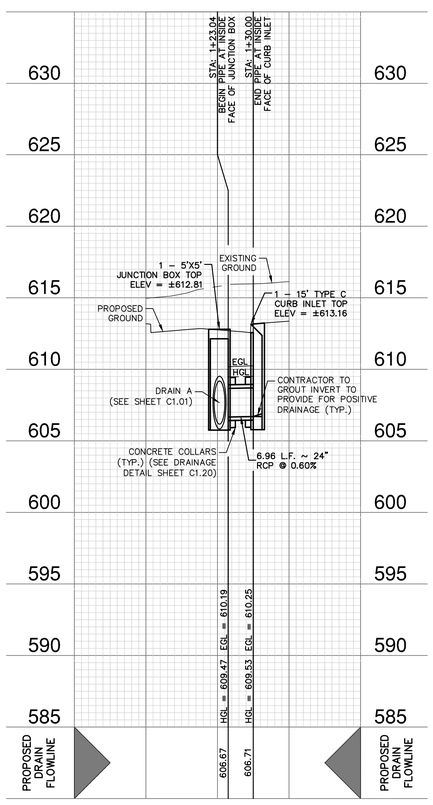

DRAIN "C"
STA. 1+00.00 TO END

VERTICAL SCALE: 1" = 5'
HORIZONTAL SCALE: 1" = 20'

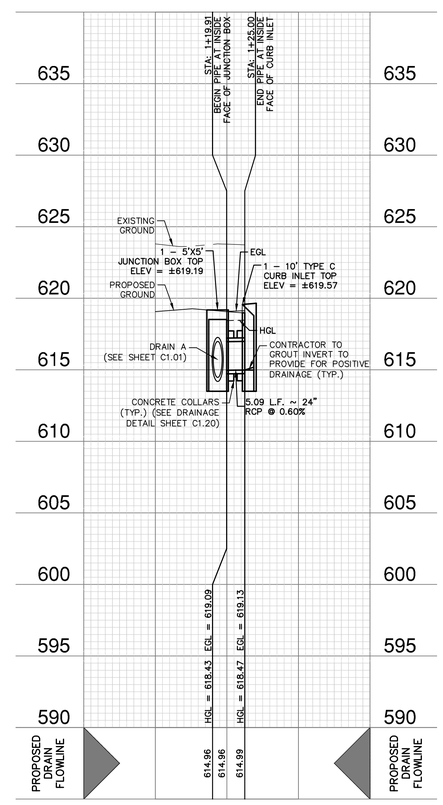

DRAINAGE & GRADING NOTES:

1. A ROW PERMIT MUST BE OBTAINED BEFORE WORKING IN ROW. CONTRACTOR SHALL COORDINATE A TRAFFIC CONTROL PLAN FOR ALL WORK WITHIN THE ROW. ADDITIONAL WARNING SIGNS MAY BE RECOMMENDED BY THE ENGINEER ONCE THE ROADWAYS ARE CONSTRUCTED.
2. THE CONTRACTOR WILL BE RESPONSIBLE FOR DETERMINING EXACT LOCATION OF ALL UTILITIES AND DRAINAGE STRUCTURES WHETHER SHOWN ON THE PLANS OR NOT. THE CONTRACTOR SHALL UNCOVER EXISTING UTILITIES PRIOR TO CONSTRUCTION TO VERIFY SIZE, GRADE, AND LOCATION. THE CONTRACTOR SHALL NOTIFY THE ENGINEER IMMEDIATELY OF ANY DEVIATIONS FROM PLANS PRIOR TO BEGINNING CONSTRUCTION. ANY DAMAGE TO EXISTING UTILITIES, WHETHER SHOWN ON THE PLANS OR NOT, SHALL BE THE CONTRACTOR'S RESPONSIBILITY TO REPAIR, AT HIS EXPENSE.
3. ALL CONCRETE FOR TXDOT DRAINAGE STRUCTURES SHALL MEET TXDOT SPECIFICATIONS. ALL OTHER CONCRETE SHALL BE CLASS "A" 3000 PSI CYLINDER STRENGTH IN 28 DAYS.
4. REFERENCE DRAINAGE DETAILS FOR PIPE TRENCH DETAILS, BOX CULVERT, HEADWALL, AND WINGWALL CONSTRUCTION DETAILS, AND BOX CULVERT BEDDING AND EXCAVATION LIMITS.
5. CONTRACTOR SHALL GROUT ALL CURB INLETS AND JUNCTION BOXES TO PROVIDE FOR POSITIVE DRAINAGE.
6. EARTHEN CHANNELS WILL BE VEGETATED BY SEEDING OR SODDING. 85% OF THE CHANNEL SURFACE MUST HAVE ESTABLISHED VEGETATION BEFORE THE CITY OF SAN ANTONIO WILL ACCEPT.
7. CONTRACTOR SHALL MATCH TOP OF CHANNEL TO NATURAL GROUND AND MAINTAIN A MINIMUM CHANNEL DEPTH OF "D" AS SHOWN IN THE PROFILE.

TRENCH EXCAVATION SAFETY PROTECTION:

CONTRACTOR AND/ OR CONTRACTOR'S INDEPENDENTLY RETAINED EMPLOYEE OR STRUCTURAL DESIGN/ GEOTECHNICAL/ SAFETY/EQUIPMENT CONSULTANT, IF ANY, SHALL REVIEW THESE PLANS AND ANY AVAILABLE GEOTECHNICAL INFORMATION AND THE ANTICIPATED INSTALLATION SITES WITHIN THE PROJECT WORK AREA IN ORDER TO IMPLEMENT CONTRACTOR'S TRENCH EXCAVATION SAFETY PROTECTION SYSTEMS, PROGRAMS AND /OR PROCEDURES FOR THE PROJECT DESCRIBED IN THE CONTRACT DOCUMENTS. THE CONTRACTOR'S IMPLEMENTATION OF THESE SYSTEMS, PROGRAMS AND/OR PROCEDURES SHALL PROVIDE FOR ADEQUATE TRENCH EXCAVATION SAFETY PROTECTION THAT COMPLY WITH AS A MINIMUM, OSHA STANDARDS FOR TRENCH EXCAVATIONS. SPECIFICALLY, CONTRACTOR AND/OR CONTRACTOR'S INDEPENDENTLY RETAINED EMPLOYEE OR SAFETY CONSULTANT SHALL IMPLEMENT A TRENCH SAFETY PROGRAM IN ACCORDANCE WITH OSHA STANDARDS GOVERNING THE PRESENCE AND ACTIVITIES OF INDIVIDUALS WORKING IN AND AROUND TRENCH EXCAVATION.

CAUTION!!

CONTRACTOR SHALL BE REQUIRED TO LOCATE ALL PUBLIC OR PRIVATE UTILITIES INCLUDING BUT NOT LIMITING TO: WATER, SEWER, TELEPHONE AND FIBER OPTIC LINES, SITE LIGHTING ELECTRIC, SECONDARY ELECTRIC, PRIMARY ELECTRICAL DUCTBANKS, LANDSCAPE IRRIGATION FACILITIES, AND GAS LINES. ANY UTILITY CONFLICTS THAT ARISE SHOULD BE COMMUNICATED TO THE ENGINEER IMMEDIATELY AND PRIOR TO CONSTRUCTION. THE CONTRACTOR SHALL CONTACT 1–800–DIG–TESS A MINIMUM OF 48 HOURS PRIOR TO THE START OF CONSTRUCTION. ANY DAMAGE TO EXISTING UTILITIES SHALL BE THE SOLE RESPONSIBILITY OF THE CONTRACTOR AND THE REPAIR SHALL BE AT CONTRACTOR'S SOLE EXPENSE WHETHER THE UTILITY IS SHOWN ON THESE PLANS OR NOT.

NO.	REVISION	DATE

3/12/2024

STATE OF TEXAS
REBECCA ANN CARROLL
92666
LICENSED
PROFESSIONAL ENGINEER

PAPE-DAWSON ENGINEERS
SAN ANTONIO I AUSTIN I HOUSTON I FORT WORTH I DALLAS
2000 NW LOOP 410 I SAN ANTONIO, TX 78213 I 210.375.9000
TEXAS ENGINEERING FIRM #470 I TEXAS SURVEYING FIRM #10028800

SPANISH TRAILS-UNIT 2 EAST

SAN ANTONIO, TEXAS

DRAIN B AND DRAIN C
PLAN AND PROFILE

PHASE 2B

PLAT NO. 22-11800121
JOB NO. 12044–05
DATE MARCH 2024
DESIGNER AC
CHECKED ____ DRAWN AC
SHEET C1.02

Date: Mar 12, 2024, 11:22am User ID: gkillebrew
File: P:\120\44\DS\Design\Civil\DRB\2044DS.dwg

THIS DOCUMENT HAS BEEN PRODUCED FROM MATERIAL THAT WAS STORED AND/OR TRANSMITTED ELECTRONICALLY AND MAY HAVE BEEN INADVERTENTLY ALTERED. RELY ONLY ON FINAL HARDCOPY MATERIALS BEARING THE CONSULTANT'S ORIGINAL SIGNATURE AND SEAL. AERIAL IMAGERY PROVIDED BY GOOGLE© UNLESS OTHERWISE NOTED. Imagery © 2016,CAPCOG,Digital Globe,Texas Orthoimagery Program, USDA Farm Service Agency.

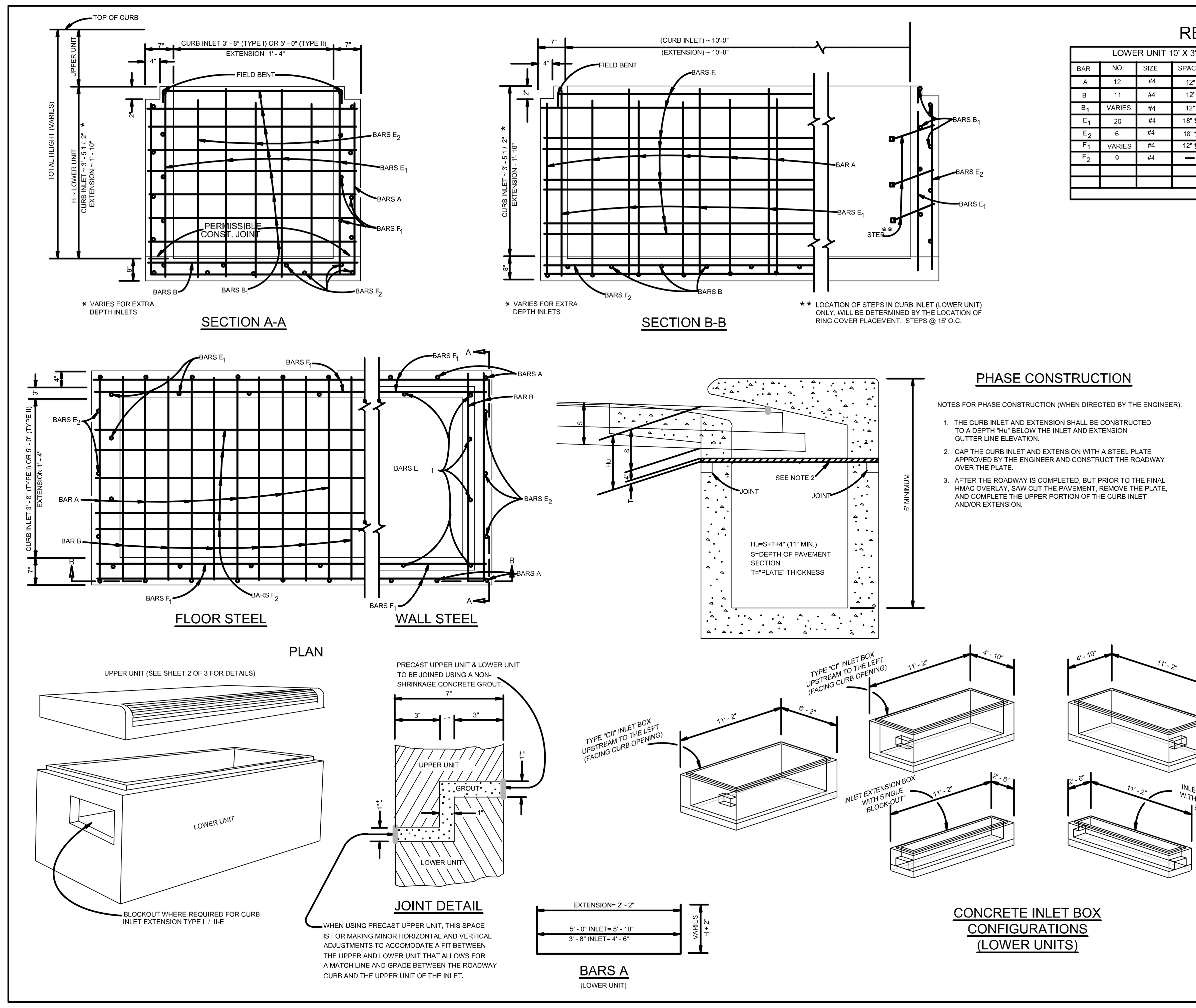

PHASE CONSTRUCTION

NOTES FOR PHASE CONSTRUCTION (WHEN DIRECTED BY THE ENGINEER):

1. THE CURB INLET AND EXTENSION SHALL BE CONSTRUCTED TO A DEPTH "Hu" BELOW THE INLET AND EXTENSION GUTTER LINE ELEVATION.
2. CAP THE CURB INLET AND EXTENSION WITH A STEEL PLATE APPROVED BY THE ENGINEER AND CONSTRUCT THE ROADWAY OVER THE PLATE.
3. AFTER THE ROADWAY IS COMPLETED, BUT PRIOR TO THE FINAL HMAC OVERLAY, SAW CUT THE PAVEMENT, REMOVE THE PLATE, AND COMPLETE THE UPPER PORTION OF THE CURB INLET AND/OR EXTENSION.

GENERAL NOTES

1. 5' INLETS AND 5' EXTENSIONS MUST BE IN ACCORDANCE WITH THE LATEST TXDOT CURB INLET TYPE "C" AND EXTENSION TYPE "E" (IL-C).
2. TYPE "C-II" INLET TO BE USED ONLY WHEN STORM DRAIN PIPE IS IN-LINE WITH CURB INLET AND APPROVED BY THE ENGINEER.
3. QUANTITIES SHOWN ARE FOR CONTRACTORS INFORMATION ONLY.
4. CONCRETE FOR STRUCTURES SHALL BE CLASS "A", 3000 PSI IN 28 DAYS.
5. ALL DIMENSIONS RELATING TO REINFORCING STEEL ARE TO CENTER OF BARS.
6. ALL REINFORCING STEEL SHALL HAVE A MINIMUM COVER OF 1 1 / 2".
7. ALL REINFORCING STEEL SHALL CONFORM TO A.S.T.M. A-615, GRADE 60 REQUIREMENTS.
8. ALL EXPOSED CORNERS SHALL BE CHAMFERED 3 / 4".
9. DEPRESSION SLAB SHALL RECEIVE A WOOD FLOAT FINISH.
10. FACE OF INLET TO CONFORM TO FACE OF CURB LINE.
11. ALL BARS INTERCEPTING MANHOLE RING & COVER SHALL BE CUT OR BENT.
12. PAYMENT FOR ALL EXCAVATION, BACK-FILLING, CONCRETE, REINFORCING STEEL, RING AND COVER, CURB ARMOR AND STEPS SHALL BE INCLUDED IN THE UNIT COST OF ITEM 403 "STORM SEWER JUNCTION BOXES AND INLETS".
13. CAST IRON MANHOLE RING AND COVER TO BE PLACED NEXT TO OUTLET PIPE, EXCEPT FOR VERTICAL OUTLET PIPE IN WHICH CASE MANHOLE RING AND COVER WILL BE OFFSET.
14. GALVANIZED BOLTS, NUTS, WASHERS, PLATES AND GASKETS ARE SUBSIDIARY TO INLETS.
15. THE CONTRACTOR SHALL PROVIDE AN ADEQUATE MEANS TO LIFT AND PLACE THE INLETS, WHEN USING PRECAST UNITS.
16. ALL BARS AT PIPE BLOCKOUT LOCATIONS SHALL BE CUT OR BEND.
17. ALL LOWER UNITS SHALL RECEIVE INVERT MORTAR SHAPING.
18. PIPE BLOCKOUTS IN INLET WALLS SHOULD NOT EXCEED 3" BEYOND THE OUTER SHELL OF THE PIPE, TAKING INTO ACCOUNT THE SKEW OF THE PIPE, AS NECESSARY. CONSTRUCTION JOINT MAY BE RAISED A MAXIMUM OF 6".

MAY 2009

CITY OF SAN ANTONIO

CAPITAL IMPROVEMENTS MANAGEMENT SERVICES DEPARTMENT

TYPE "C" INLET (TYPE I & II) & INLET EXTENSION STANDARDS

SHEET 1 OF 3

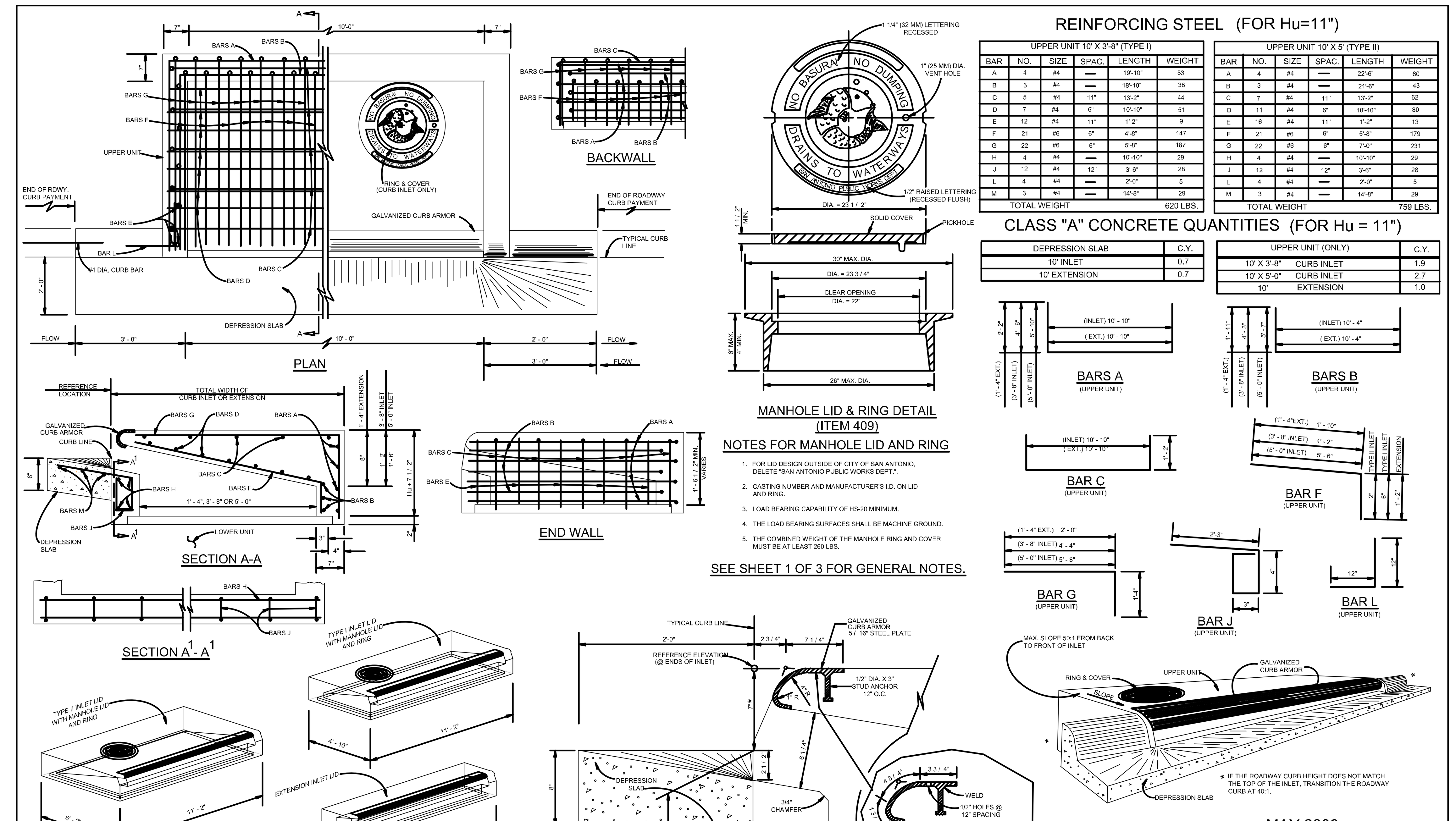

MANHOLE LID & RING DETAIL (ITEM 409)

NOTES FOR MANHOLE LID AND RING

1. FOR LID DESIGN OUTSIDE OF CITY OF SAN ANTONIO, DELETE "SAN ANTONIO PUBLIC WORKS DEPT.".
2. CASTING NUMBER AND MANUFACTURER'S I.D. ON LID AND RING.
3. LOAD BEARING CAPABILITY OF HS-20 MINIMUM.
4. THE LOAD BEARING SURFACES SHALL BE MACHINE GROUND.
5. THE COMBINED WEIGHT OF THE MANHOLE RING AND COVER MUST BE AT LEAST 260 LBS.

SEE SHEET 1 OF 3 FOR GENERAL NOTES.

MAY 2009

CITY OF SAN ANTONIO

CAPITAL IMPROVEMENTS MANAGEMENT SERVICES DEPARTMENT

TYPE "C" INLET (TYPE I & II) & INLET EXTENSION STANDARDS

SHEET 2 OF 3

% SUBMITTAL	PROJECT NO.:	DATE:
DRWN. BY: V. VASQUEZ	DSGN. BY: L.E. MALTOS, P.E.	CHKD. BY: R.S. HOSSEINI, P.E.	SHEET NO.: OF

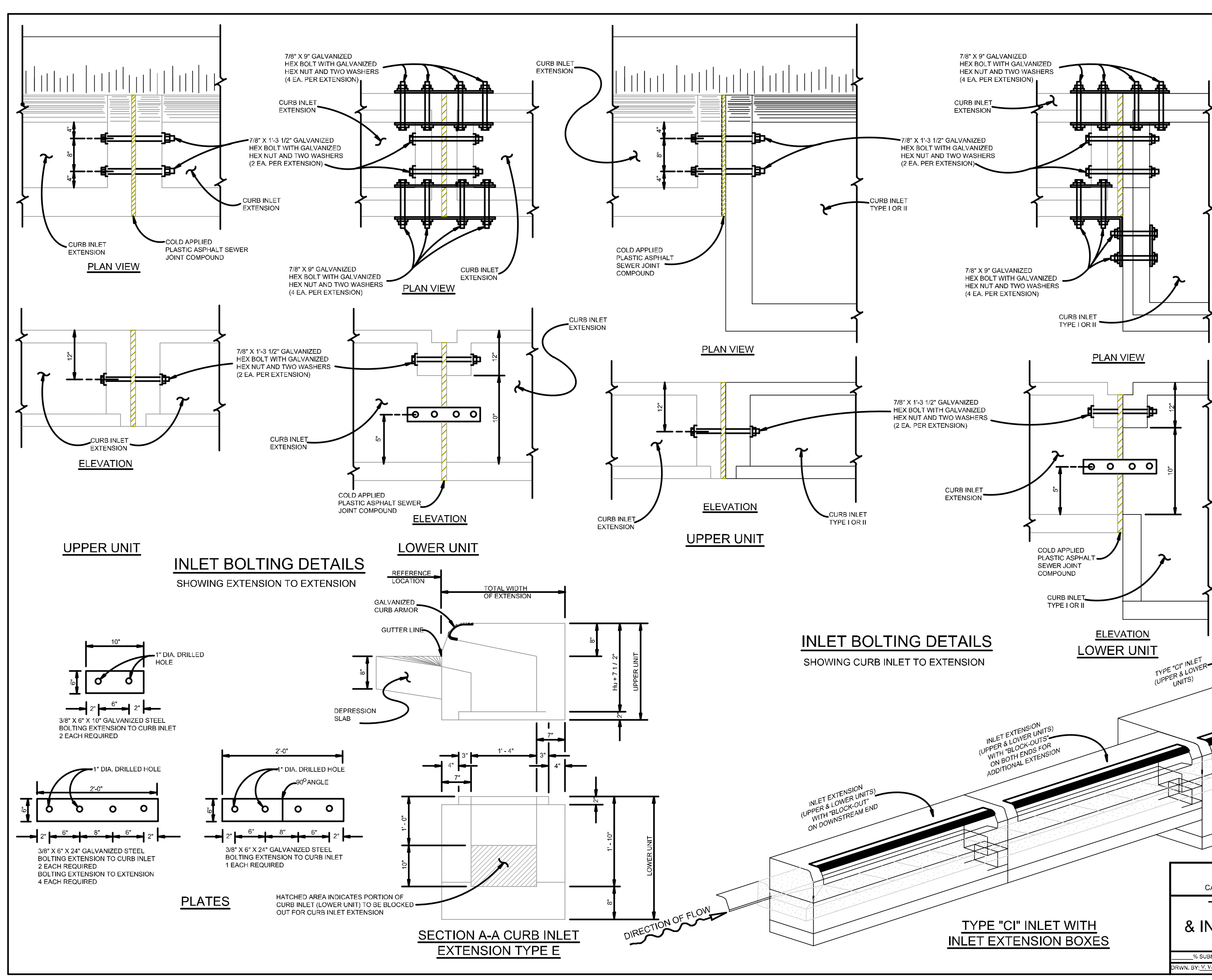

F_2	5	#4	—	10' - 10"	36
REINFORCING STEEL				LBS.	254
CLASS. "A" CONCRETE				C.Y.	1.4

GENERAL NOTES

1. WHEN INLET EXTENSIONS ARE REQUIRED FOR ON GRADE INLETS WITH EXTENSION(S) SHALL BE PLACED ON THE UPSTREAM END OF THE INLET.
2. FOR CURB INLET EXTENSION REINFORCING STEEL NOTES & VARIOUS OTHER APPLICABLE DETAILS NOT FOUND ON THIS SHEET, REFER TO SHEETS 1 & 2.

MAY 2009

CITY OF SAN ANTONIO

CAPITAL IMPROVEMENTS MANAGEMENT SERVICES DEPARTMENT

TYPE "C" INLET (TYPE I & II) & INLET EXTENSION STANDARDS

SHEET 3 OF 3

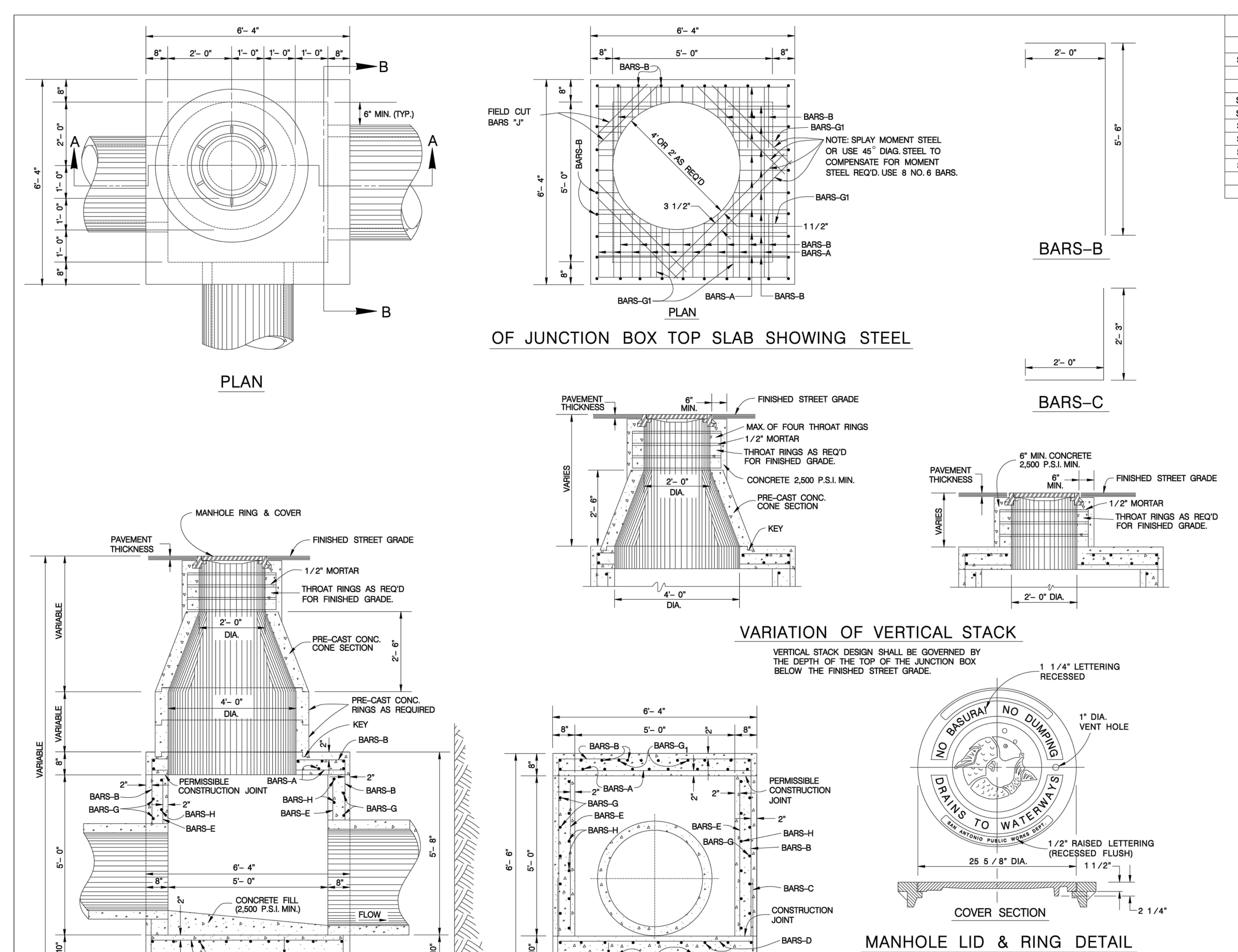

MANHOLE LID & RING DETAIL

SCALE: 1 : 16

NOTES FOR MANHOLE LID AND RING

1. FOR LID DESIGN OUTSIDE OF CITY OF SAN ANTONIO, DELETE "SAN ANTONIO PUBLIC WORKS DEPT.".
2. CASTING NUMBER AND MANUFACTURER'S I.D. ON LID AND RING.
3. LOAD BEARING CAPABILITY OF HS–20 MINIMUM.
4. THE LOAD BEARING SURFACES SHALL BE MACHINE GROUND.
5. THE COMBINED WEIGHT OF THE MANHOLE RING AND COVER MUST BE AT LEAST 260 LBS.

SCHEDULE FOR REINFORCING STEEL

SHAPE	BAR	NO.	SIZE	SPACING	LENGTH	WEIGHT
STRAIGHT	A	18	4	9" O.C.	6'– 1"	73
	B	36	5	8" O.C.	7'– 6"	282
	C	36	5	8" O.C.	4'– 3"	160
STRAIGHT	D	18	4	9" O.C.	6'– 1"	73
STRAIGHT	E	20	3	12" O.C.	4'– 11"	37
STRAIGHT	G	20	4	12" O.C.	6'– 1"	81
STRAIGHT	G_1	8	4	AS SHOWN	6'– 1"	33
STRAIGHT	H	24	3	12" O.C.	5'– 5"	49
STRAIGHT	J	8	6	3 1/2" O.C.	4'– 11"	59
					TOTAL	847 lbs.

CLASS "A" CONCRETE – 5.03 CU. YDS. (DOES NOT EXCLUDE MANHOLE OPENINGS OR PIPE OPENING)

* NOTE: BAR SIZE AND SPACING BASED ON SPANS AS SHOWN – ANY REVISIONS TO THESE SPANS SHALL INCLUDE A RE–DESIGN ON STEEL REQD.

1. CONCRETE FOR STRUCTURE SHALL BE CLASS "A" 3,000 P.S.I. AT 28 DAYS.
2. ALL EXPOSED EDGES SHALL BE CHAMFERED 3/4".
3. REINFORCING STEEL SHALL BE NEW BILLET STEEL, INTERMEDIATE GRADE, ASTM A–15. THE DEFORMATION SHALL CONFORM TO ASTM A–305.
4. ALL DIMENSIONS RELATING TO REINFORCING STEEL ARE TO CENTER OF BARS.
5. ALL BARS INTERCEPTING MANHOLE OPENING AND REINFORCED CONCRETE PIPE SHALL BE FIELD–CUT.
6. WHERE LAPPING OF BARS IS REQUIRED, A MINIMUM LAP OF 33 DIAMETERS SHALL BE USED.
7. INVERT OF JUNCTION BOX TO BE SHAPED WITH CONCRETE FILL (2,500 P.S.I. MIN.) TO EFFECT DRAINAGE TO OUTLET PIPE. COST SUBSIDIARY TO CLASS "A" CONCRETE (JUNCTION BOXES).
8. PAYMENT FOR ALL EXCAVATION, BACKFILLING, CONCRETE, REINFORCING STEEL, VERTICAL STACK, RING AND COVER SHALL BE INCLUDED IN THE UNIT COST OF ITEM 403 – "STORM SEWER JUNCTION BOXES AND INLETS".

FILL TO SPRING LINE OF PIPE WITH 2,500 P.S.I. CONCRETE NON–PAY ITEM. COST SUBSIDIARY TO CLASS "A" CONCRETE (JUNCTION BOX).

CURVED DEFLECTOR DETAIL

JANUARY 2005

CITY OF SAN ANTONIO

CAPITAL IMPROVEMENTS MANAGEMENT SERVICES DEPARTMENT

5'x5'x5' JUNCTION BOX STANDARDS

NO.	REVISION	DATE

12/4/2023

STATE OF TEXAS — REBECCA ANN CARROLL — 92666 — LICENSED PROFESSIONAL ENGINEER

PAPE-DAWSON ENGINEERS

SAN ANTONIO I AUSTIN I HOUSTON I FORT WORTH I DALLAS
2000 NW LOOP 410 I SAN ANTONIO, TX 78213 I 210.375.9000
TEXAS ENGINEERING FIRM #470 I TEXAS SURVEYING FIRM #10028800

SPANISH TRAILS-UNIT 2 EAST

SAN ANTONIO, TEXAS

DRAINAGE DETAILS SHEET 1 OF 2

PHASE 2B

PLAT NO. 22-11800121

JOB NO. 12044–05

DATE DECEMBER 2023

DESIGNER AC

CHECKED ____ DRAWN AC

SHEET C1.10

Date: Dec 04, 2023, 8:45am User ID: gkillebrew
File: P:\120\44\05\Design\Civil\DRD1120440S.dwg

THIS DOCUMENT HAS BEEN PRODUCED FROM MATERIAL THAT WAS STORED AND/OR TRANSMITTED ELECTRONICALLY AND MAY HAVE BEEN INADVERTENTLY ALTERED. RELY ONLY ON FINAL HARDCOPY MATERIALS BEARING THE CONSULTANT'S ORIGINAL SIGNATURE AND SEAL. AERIAL IMAGERY PROVIDED BY GOOGLE© UNLESS OTHERWISE NOTED. Imagery © 2016,CAPCOG,Digital Globe,Texas Orthoimagery Program, USDA Farm Service Agency.

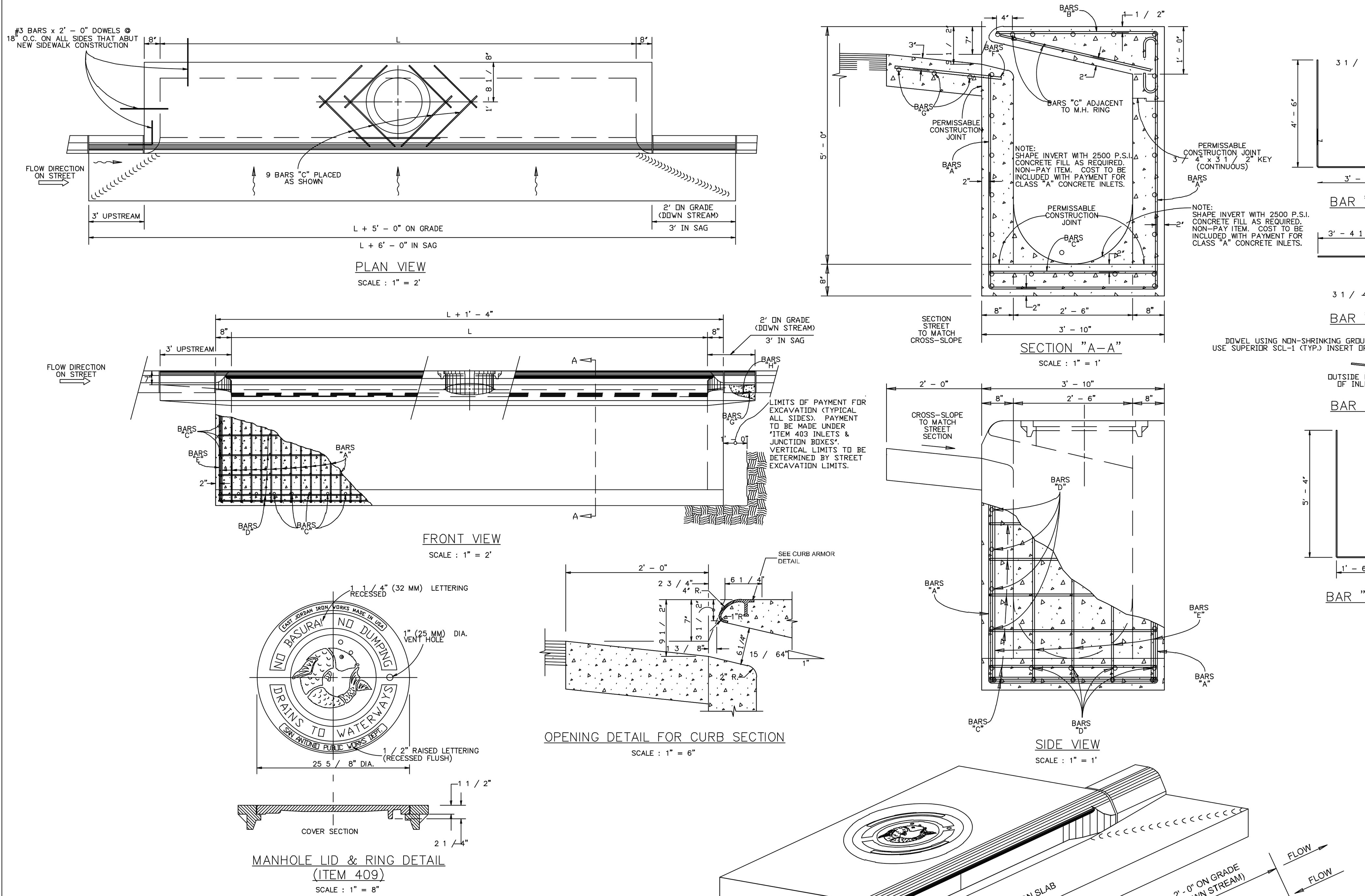

NOTES FOR MANHOLE LID AND RING

1. FOR LID DESIGN OUTSIDE OF CITY OF SAN ANTONIO, DELETE " SAN ANTONIO PUBLIC WORKS DEPT.".
2. CASTING NUMBER AND MANUFACTOR'S I.D. ON LID AND RING.
3. LOAD BEARING CAPABILITY OF HS–20 MINIMUM.
4. THE LOAD BEARING SURFACES SHALL BE MACHINE GROUND.
5. THE COMBINED WEIGHT OF THE MANHOLE RING AND COVER MUST BE AT LEAST 260 LBS.

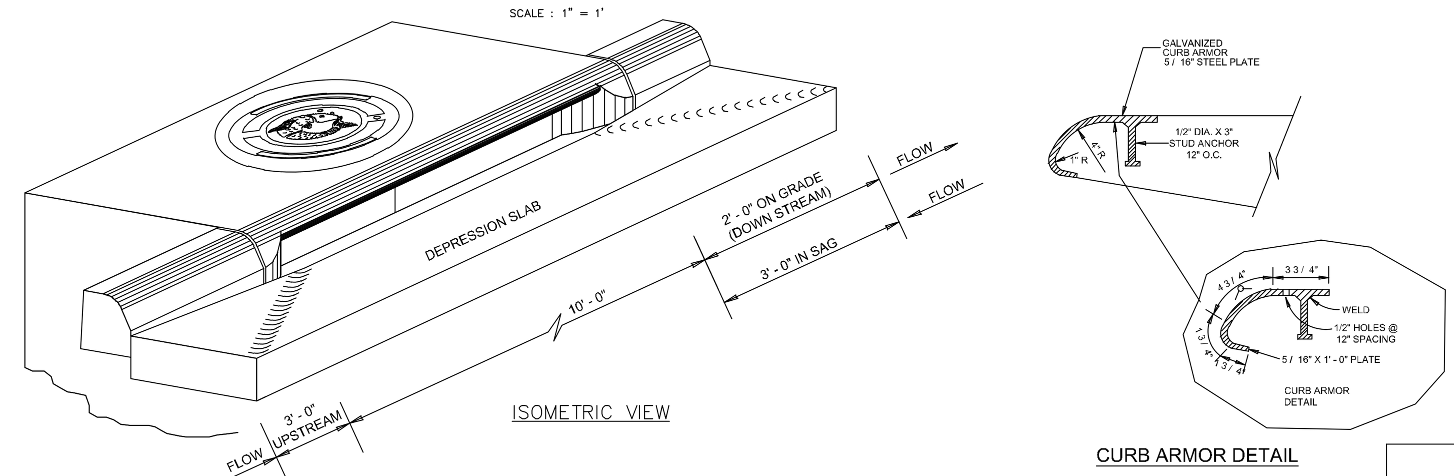

INLET LENGTH	BAR	NO.	SIZE	SPACING	LENGTH	WEIGHT
L=5' – 0"	A	15	4	5" O.C.	13' – 9 1/2"	138
	B	15	6	5" O.C.	5' – 1 3/4"	52
	C	30	6	9" O.C.	3' – 6"	70
	D	22	4	10" O.C.	6' – 1"	89
	E	10	4	10 1/2" O.C.	6' – 10"	46
	F	6	5	12" O.C.	2' – 3"	27
	G	3	4	12" O.C.	9' – 8"	20
	H	5	5	12" O.C.	1' – 8"	9
* CONCRETE TOTAL=3.53 CU. YDS. M.H. CASTING=260 LBS. STEEL TOTAL=438 LBS.						
L=10' – 0"	A	27	4	5" O.C.	13' – 9 1/2"	249
	B	27	6	5" O.C.	5' – 1 3/4"	93
	C	37	6	9" O.C.	3' – 6"	87
	D	22	4	10" O.C.	11' – 1"	163
	E	10	4	10 1/2" O.C.	6' – 10"	46
	F	12	5	12" O.C.	2' – 3"	27
	G	3	4	12" O.C.	14' – 8"	30
	H	5	5	12" O.C.	1' – 8"	9
* CONCRETE TOTAL=5.75 CU. YDS. M.H. CASTING=260 LBS. STEEL TOTAL=704 LBS.						
L=15' – 0"	A	39	4	5" O.C.	13' – 9 1/2"	359
	B	39	6	5" O.C.	5' – 1 3/4"	134
	C	43	6	9" O.C.	3' – 6"	101
	D	22	4	10" O.C.	16' – 1"	236
	E	10	4	10 1/2" O.C.	6' – 10"	46
	F	17	5	12" O.C.	2' – 3"	38
	G	3	4	12" O.C.	19' – 8"	40
	H	5	5	12" O.C.	1' – 8"	9
* CONCRETE TOTAL=7.97 CU. YDS. M.H. CASTING=260 LBS. STEEL TOTAL=963 LBS.						
L=20' – 0"	A	51	4	5" O.C.	13' – 9 1/2"	470
	B	51	6	5" O.C.	5' – 1 3/4"	175
	C	50	6	9" O.C.	3' – 6"	117
	D	22	4	10" O.C.	21' – 1"	310
	E	10	4	10 1/2" O.C.	6' – 10"	46
	F	22	5	12" O.C.	2' – 3"	50
	G	3	4	12" O.C.	24' – 8"	50
	H	5	5	12" O.C.	1' – 8"	9
* CONCRETE TOTAL=10.19 CU. YDS. M.H. CASTING=260 LBS. STEEL TOTAL=1227 LBS.						

* THESE FIGURES DO NOT EXCLUDE CONCRETE & STEEL INTERCEPTED BY MANHOLE AND REINFORCED CONC. PIPE.
* INCLUDES CONCRETE GUTTER FOR ON GRADE INLET. REDUCE BY .05 C.Y. FOR INLETS IN SUMP.

GENERAL NOTES:

1. ALL BARS INTERCEPTING MANHOLE RING & REINFORCING CONCRETE PIPE SHALL BE FIELD CUT.
2. CONCRETE FOR STRUCTURES SHALL BE CLASS "A", 3000 PSI IN 28 DAYS.
3. ALL DIMENSIONS RELATING TO REINFORCING STEEL ARE TO CENTER BARS.
4. ALL EXPOSED CORNERS SHALL BE CHAMFERED TO 3 / 4"
5. CONSTRUCTION JOINT SHOWN AT FLOWLINE MAY BE RAISED A MAXIMUM OF 6" AT THE. CONTRACTOR'S DISCRETION. ADJUST LENGTH OF VERTICAL STEEL AS REQUIRED.
6. ALL REINFORCING STEEL SHALL CONFORM TO A.S.T.M. A–615, GRADE 60 REQUIREMENTS.
7. INVERT OF DROP INLET TO BE SHAPED WITH CONCRETE FILL TO AFFECT DRAINAGE TO OUTLET PIPE.
8. DELETE 4 "C" BARS FROM SCHEDULE QUANTITIES IF MANHOLE RING AND COVER ARE PLACED AT END OF INLET.
9. CAST IRON MANHOLE RING AND COVER TO BE PLACED NEXT TO OUTLET PIPE, EXCEPT FOR VERTICAL OUTLET PIPE IN WHICH CASE MANHOLE RING AND COVER WILL BE OFFSET.
10. PAYMENT FOR ALL EXCAVATION, BACK FILLING, CONCRETE, REINFORCING STEEL, RING AND COVER SHALL BE INCLUDED IN THE UNIT COST OF ITEM 403 "STORM SEWER JUNCTION BOXES AND INLETS".

STANDARD PLANS
CITY OF SAN ANTONIO, TEXAS
DEPARTMENT OF PUBLIC WORKS

TYPE "C" INLET
STANDARDS

DRAWN BY: V. VASQUEZ — CHECKED BY: NAT HARDY, P.E. — SCALE: SEE ABOVE

CURB INLET DETAILS

N.T.S.

1. CONCRETE FOR STRUCTURE SHALL BE CLASS "A," 3,000 P.S.I. AT 28 DAYS.
2. ALL EXPOSED EDGES SHALL BE CHAMFERED 3/4".
3. REINFORCING STEEL SHALL BE NEW BILLET STEEL, INTERMEDIATE GRADE, ASTM. A–15. THE DEFORMATION SHALL CONFORM TO ASTM. A–305.
4. ALL DIMENSIONS RELATING TO REINFORCING STEEL ARE TO CENTER OF BARS.
5. ALL BARS INTERCEPTING MANHOLE OPENING AND REINFORCED CONCRETE PIPE SHALL BE FIELD–CUT.
6. WHERE LAPPING OF BARS IS REQUIRED, A MINIMUM LAP OF 33 DIAMETERS SHALL BE USED.
7. INVERT OF JUNCTION BOX TO BE SHAPED WITH CONCRETE FILL (3,000 P.S.I. MIN.) TO EFFECT DRAINAGE TO OUTLET PIPE. COST SUBSIDIARY TO CLASS "A" CONCRETE (JUNCTION BOXES).

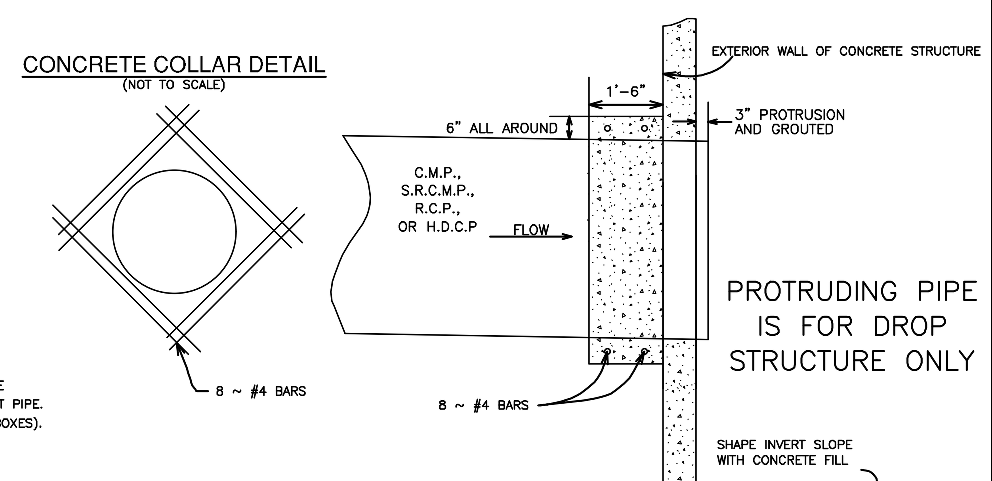

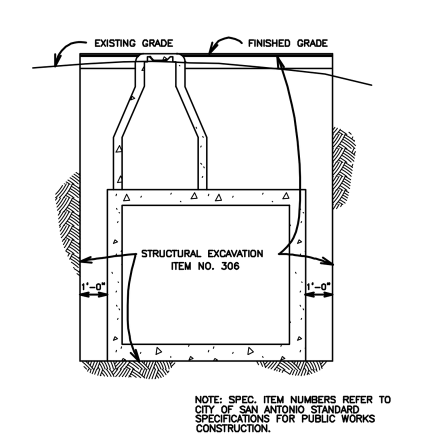

STRUCTURAL EXCAVATION AT JUNCTION BOXES

(NOT TO SCALE)

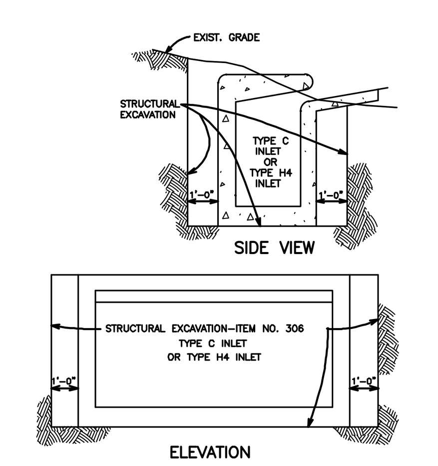

STRUCTURAL EXCAVATION AT DRAINAGE INLETS

(NOT TO SCALE)

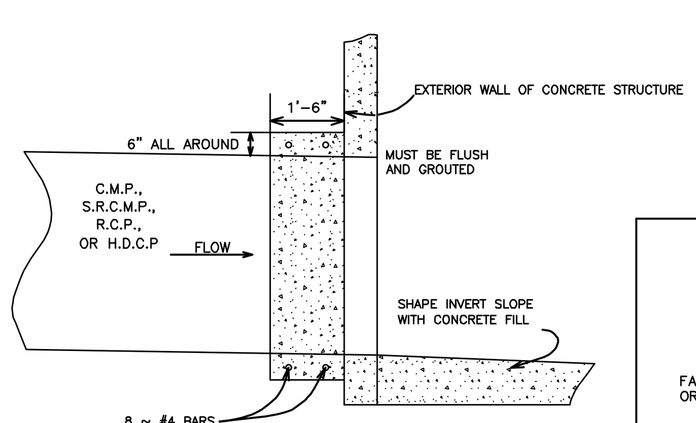

PIPE FLUSH WITH INVERT

JANUARY 2006

STANDARD PLANS
CITY OF SAN ANTONIO, TEXAS
DEVELOPMENT SERVICES

CONCRETE COLLAR DETAIL

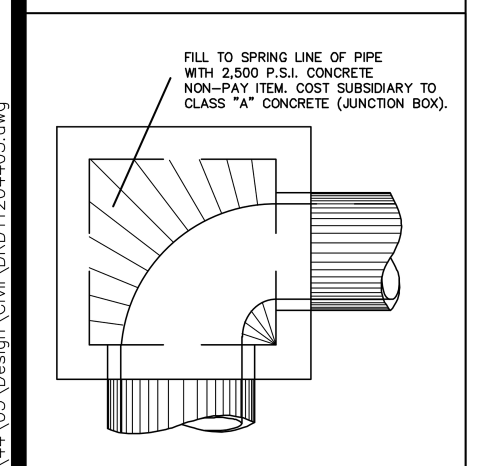

CURVED DEFLECTOR DETAIL

(NOT TO SCALE)

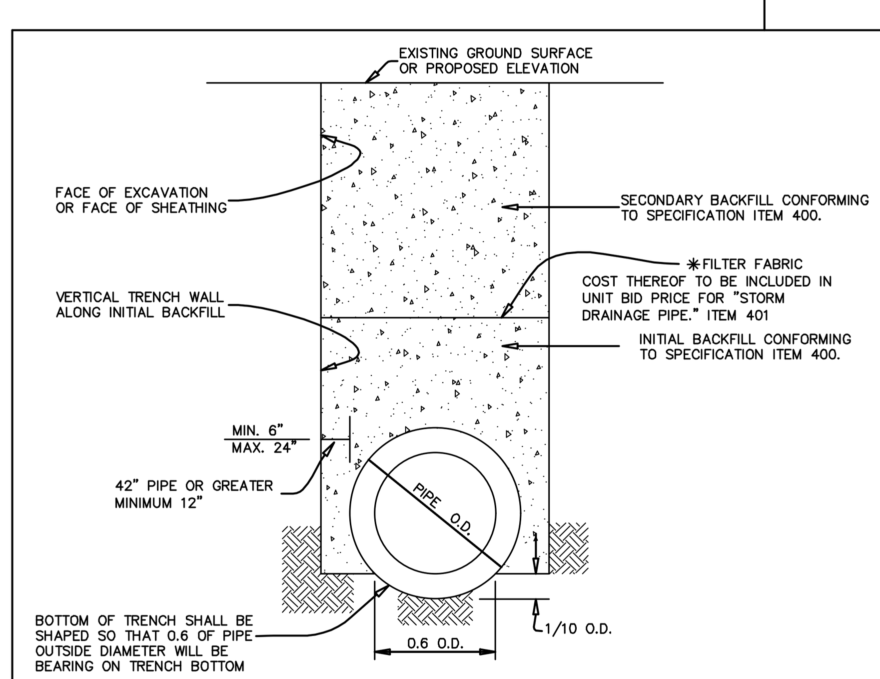

TYPICAL DETAIL FOR R.C.P.

NOT–TO–SCALE

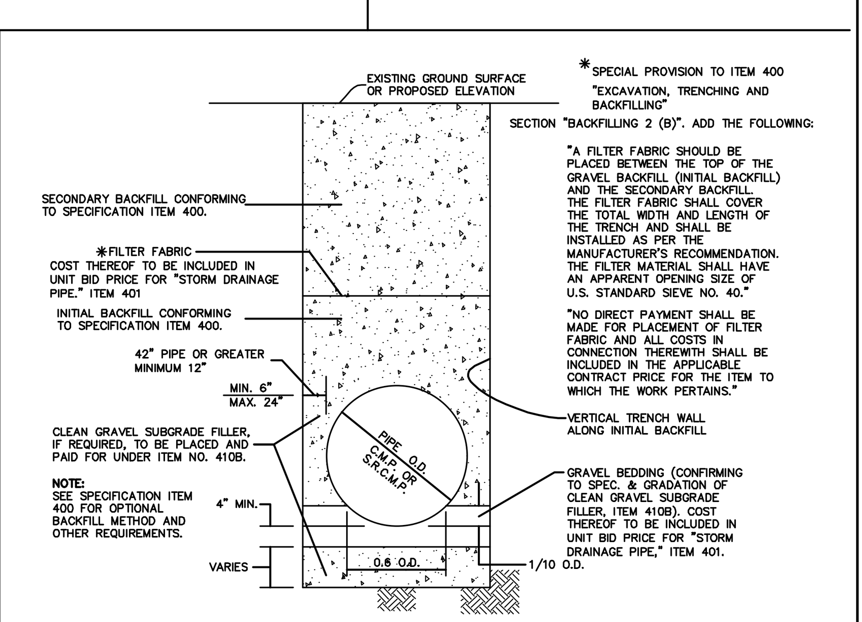

TYPICAL DETAIL FOR C.M.P. AND S.R.C.M.P.

NOT TO SCALE

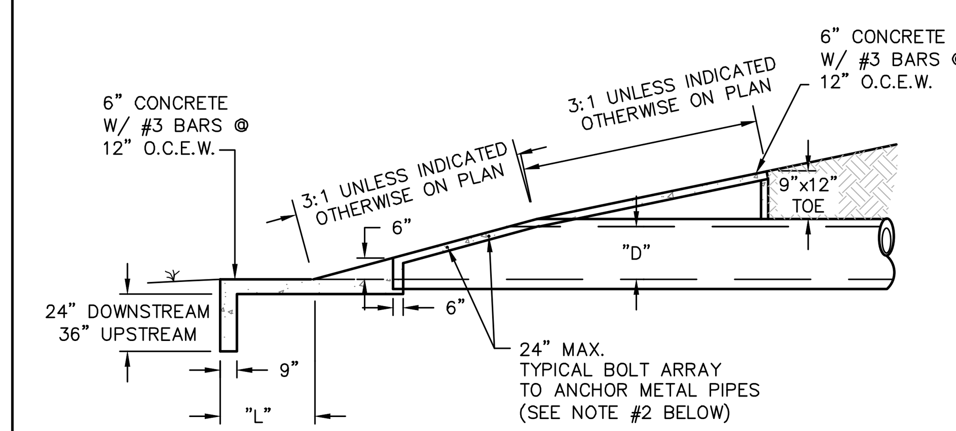

LONGITUDINAL SECTION FOR CIRCULAR & ARCH PIPES

NOT–TO–SCALE

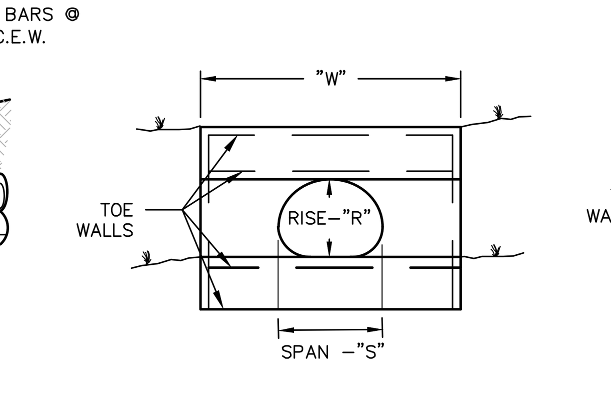

SINGLE C.M.P. ARCH PIPE CULVERT

NOT–TO–SCALE

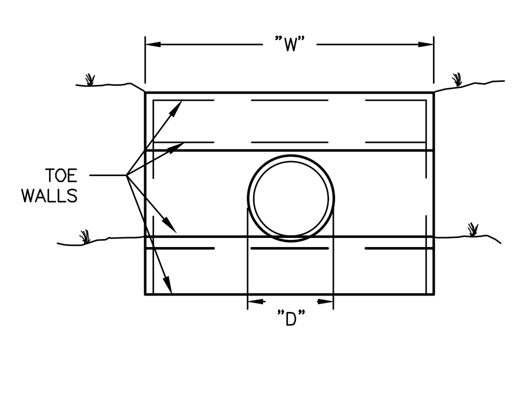

SINGLE CIRCULAR PIPE CULVERT

(CMP OR RCP)

NOT–TO–SCALE

DIMENSIONS FOR CIRCULAR (CMP AND RCP) PIPE CULVERT

"D" INSIDE DIA. OF PIPE	"L"	"G"		SINGLE	DOUBLE	TRIPLE	QUADRUPLE
		CGM	RCP	"W"			
18"	2'–0"	1'–2"	0'–9"	4'–6"	7'–2"	9'–10"	12'–6"
21"	2'–6"	1'–3"	0'–10"	5'–3"	8'–4"	11'–4"	13'–4"
24"	3'–0"	1'–5"	0'–11"	6'–0"	9'–5"	12'–10"	16'–3"
30"	4'–0"	1'–8"	1'–1"	7'–6"	11'–8"	15'–10"	20'–0"
36"	5'–0"	1'–11"	1'–3"	9'–0"	13'–11"	18'–10"	23'–9"
42"	6'–0"	2'–2"	1'–5"	10'–6"	16'–2"	21'–10"	27'–6"
48"	7'–0"	2'–5"	1'–7"	12'–0"	18'–5"	24'–10"	31'–3"
54"	8'–0"	2'–10"	1'–11"	13'–6"	20'–10"	28'–2"	35'–6"
60"	9'–0"	3–2"	2'–0"	15'–0"	23'–2"	31'–4"	39'–6"

"G" IS MEASURED BETWEEN THE OTHER SURFACES OF THE PIPES.

DIMENSIONS FOR C.M.P. ARCH PIPE CULVERTS

DESIGN SIZE	APPROX ARCH DIM. RISE "R"	SPAN "S"	"L"	"G"	SINGLE	DOUBLE	TRIPLE	QUADRUPLE
					"W"			
2	21"	15"	2'–0"	1'–2"	4'–3"	7'–2"	10'–1"	13'–0"
3	28"	20"	3'–0"	1'–5"	5'–8"	9'–5"	13'–2"	16'–11"
4	35"	24"	4'–0"	1'–8"	6'–11"	11'–6"	16'–1"	20'–8"
5	42"	29"	5'–0"	1'–11"	8'–4"	13'–9"	19'–2"	24'–7"
6	49"	33"	6'–0"	2'–2"	9'–7"	15'–10"	22'–1"	28'–4"
7	57"	38"	7'–0"	2'–5"	11'–1"	18'–3"	25'–5"	32'–7"
8	64"	43"	8'–0"	2'–10"	12'–5"	20'–8"	28'–10"	37'–0"
9	71"	47"	9'–0"	3'–2"	13'–9"	22'–10"	31'–11"	41'–0"

BASED ON 2–2/3" X 1/2" CORRUGATION
"G" IS MEASURED BETWEEN THE OTHER SURFACES OF THE PIPES.

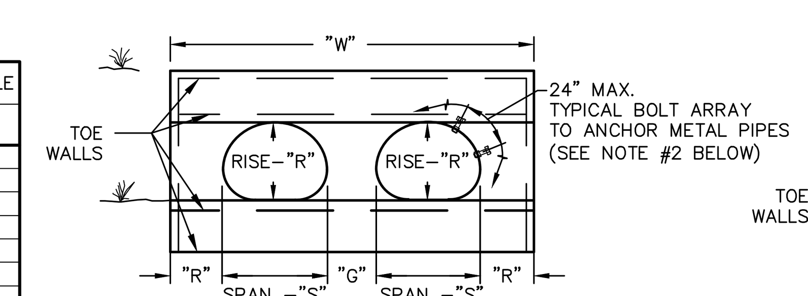

MULTIPLE C.M.P. ARCH PIPE CULVERT

NOT–TO–SCALE

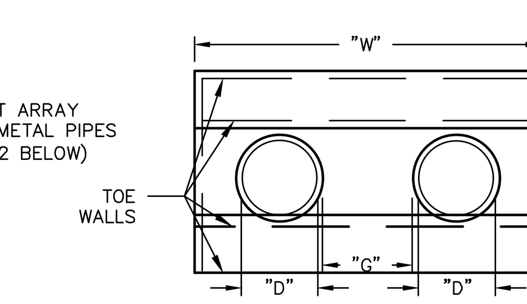

MULTIPLE CIRCULAR PIPE CULVERT

(CMP OR RCP)

NOT–TO–SCALE

NOTES:

1. CONCRETE SHALL BE CLASS "A" 3000 PSI
2. ALL METAL PIPES (CIRCULAR AND/OR ARCH) SHALL HAVE 5/8" X 6" GALVANIZED BOLTS WITH 2 HEX NUTS AT 24" CENTERS TO ANCHOR THE PIPE TO THE CONCRETE. THIS WILL BE SUBSIDIARY TO THE RIPRAP HEADWALL.
3. FOR CONCRETE ARCH PIPES THE CMP ARCH PIPE CULVERT DIMENSIONS WILL HAVE TO BE ADJUSTED FOR THE PIPE WALL THICKNESS.
4. FOR PIPES LARGER THAN SHOWN. USE THE CLEAR DISTANCE BETWEEN PIPES SHOWN IN TXDOT ITEMS 460 AND/OR 464.
5. IF THE SIDES OF THE HEADWALL IS ADJACENT TO A RIPRAP SLOPE AND IF THE TOP OF THE HEADWALL IS ADJACENT TO THE ROADWAY FOUNDATION OR RIPRAP SLOPE. THE SIDE AND TOP TOE WALLS MAY BE ELIMINATED IF APPROVED BY THE ENGINEER.

RH-15 HEADWALL

NO.	REVISION	DATE

12/5/2023

PAPE-DAWSON ENGINEERS
SAN ANTONIO I AUSTIN I HOUSTON I FORT WORTH I DALLAS
2000 NW LOOP 410 I SAN ANTONIO, TX 78213 I 210.375.9000
TEXAS ENGINEERING FIRM #470 I TEXAS SURVEYING FIRM #10028800

SPANISH TRAILS-UNIT 2 EAST

SAN ANTONIO, TEXAS

DRAINAGE DETAILS SHEET 2 OF 2

PHASE 2B

PLAT NO. 22-11800121
JOB NO. 12044–05
DATE DECEMBER 2023
DESIGNER AC
CHECKED ____ DRAWN AC
SHEET C1.20

Date: Dec 05, 2023, 1:09pm User ID: gkillebrew
File: P:\120\44\05\Design\Civil\DR0T1204405.dwg
THIS DOCUMENT HAS BEEN PRODUCED FROM MATERIAL THAT WAS STORED AND/OR TRANSMITTED ELECTRONICALLY AND MAY HAVE BEEN INADVERTENTLY ALTERED. RELY ONLY ON FINAL HARDCOPY MATERIALS BEARING THE CONSULTANT'S ORIGINAL SIGNATURE AND SEAL. AERIAL IMAGERY PROVIDED BY GOOGLE© UNLESS OTHERWISE NOTED. Imagery © 2016,CAPCOG,Digital Globe,Texas Orthoimagery Program, USDA Farm Service Agency.

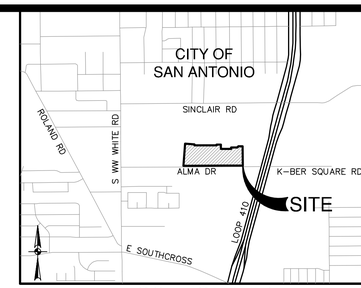

LOCATION MAP

NOT-TO-SCALE

SCALE: 1"= 50'

0' 50' 100' 150'

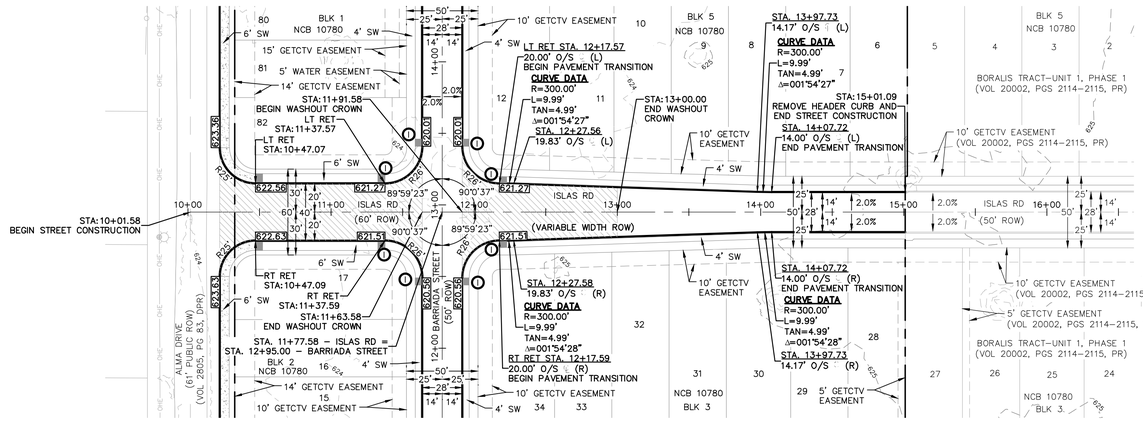

ISLAS RD
STA. 10+00.00 TO END

VERTICAL SCALE: 1" = 5'
HORIZONTAL SCALE: 1" = 50'

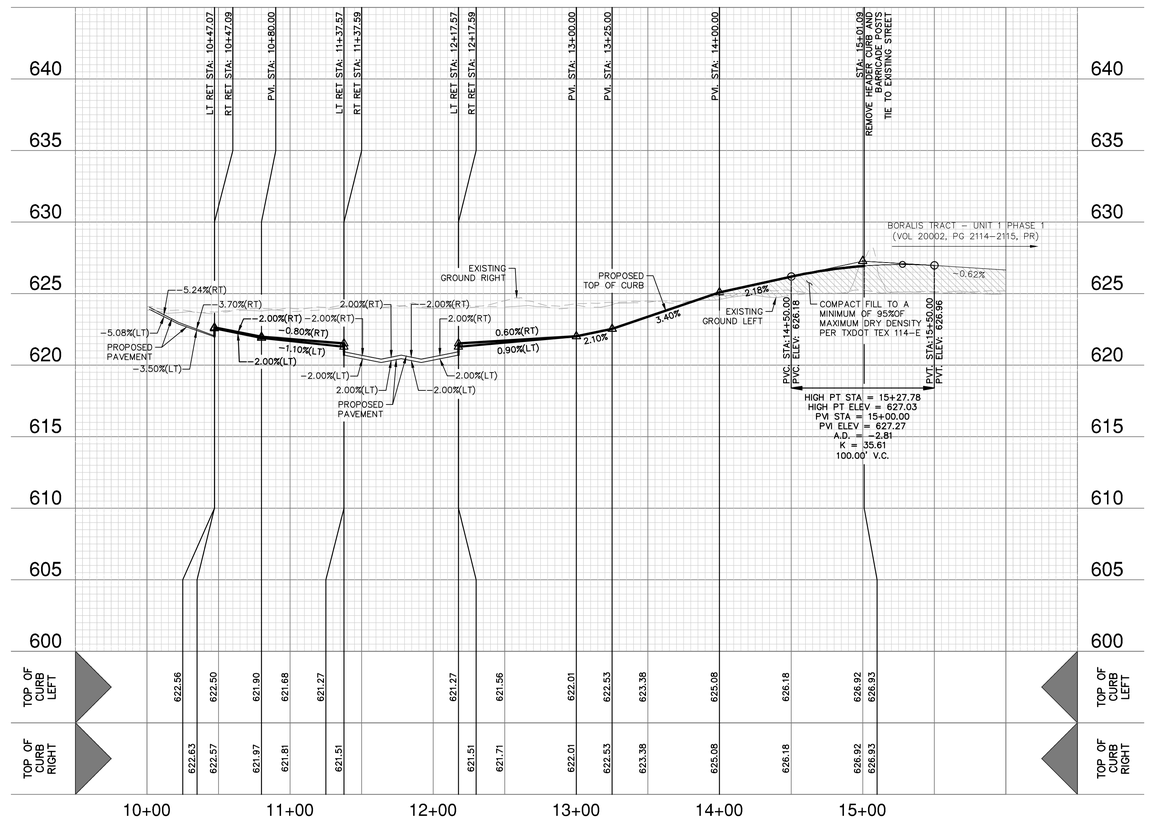

STREET LEGEND

PROJECT LIMITS	
WHEELCHAIR RAMP	
POINT OF CURVATURE	PC
POINT OF TANGENCY	PT
RETURN	RET
TOP OF CURB SPOT ELEVATION	975.50
WASHOUT CROWN SECTION	
PROPOSED SIDEWALK [SW] (HOMEBUILDER'S RESPONSIBILITY)	
PROPOSED CONCRETE SIDEWALK [SW] (CONTRACTOR'S RESPONSIBILITY)	
DRIVEWAY	

STREET NOTES:

1. A ROW PERMIT MUST BE OBTAINED BEFORE WORKING IN ROW. CONTRACTOR SHALL COORDINATE A TRAFFIC CONTROL PLAN FOR ALL WORK WITHIN THE ROW. ADDITIONAL WARNING SIGNS MAY BE RECOMMENDED BY THE ENGINEER ONCE THE ROADWAYS ARE CONSTRUCTED.
2. CONTRACTOR SHALL MATCH EXISTING PAVEMENT AT TIE-IN. IF EXISTING PAVEMENT ELEVATION DIFFERS SIGNIFICANTLY, CONTRACTOR SHALL NOTIFY THE ENGINEER PRIOR TO CONTINUING WORK.
3. SIDEWALKS SHALL BE CONSTRUCTED 3-FT FROM THE BACK OF CURB FOR ALL LOCATIONS WHERE THE SIDEWALK IS SHOWN OFFSET. REFER TO STREET DETAIL SHEET FOR SIDEWALK AND RAMP DETAILS.
4. NO PERMANENT STRUCTURES HIGHER THAN 3 FEET, AND LOWER THAN 8 FEET ABOVE THE PAVEMENT, INCLUDING STRUCTURES, WALLS, FENCES, AND VEGETATION, SHALL BE CONSTRUCTED OR ALLOWED WITHIN THE CLEAR VISION EASEMENT. CONTRACTOR SHALL GRADE AREAS WITHIN CLEAR VISION EASEMENTS SUCH THAT THE ELEVATION WITHIN THE CLEAR VISION EASEMENT IS NOT HIGHER THAN 3 FEET ABOVE THE ADJACENT TOP OF PAVEMENT.
5. DRIVEWAYS SHOWN ON THIS PLAN ARE FOR THE SOLE PURPOSE OF INDICATING A POTENTIAL CONFLICT WITH CURB RAMP, DRAINAGE INFRASTRUCTURE, OR OTHER CONFLICT. DRIVEWAY LOCATION IS SUBJECT TO CHANGE BASED ON HOME SELECTION AND FINAL LOT DESIGN.
6. CHANGES IN THE SIDEWALK LOCATION FOR A MAXIMUM LINEAR DISTANCE OF TWO HUNDRED (200) FEET ARE PERMITTED TO BE APPROVED BY THE FIELD INSPECTOR WITHOUT AMENDING THE STREET PLAN OR UTILITY LAYOUT PER UDC SECTION 35-506 (Q)(6).
7. THE CONSTRUCTION OF SIDEWALKS ADJACENT TO ALL 900 SERIES LOTS WILL BE THE RESPONSIBILITY OF THE DEVELOPER AS SHOWN ON THE OVERALL SIGNAGE PLAN.

NO.	REVISION	DATE

3/13/2024

STATE OF TEXAS
REBECCA ANN CARROLL
92666
LICENSED
PROFESSIONAL ENGINEER

PAPE-DAWSON ENGINEERS
SAN ANTONIO I AUSTIN I HOUSTON I FORT WORTH I DALLAS
2000 NW LOOP 410 I SAN ANTONIO, TX 78213 I 210.375.9000
TEXAS ENGINEERING FIRM #470 I TEXAS SURVEYING FIRM #10028800

SPANISH TRAILS-UNIT 2 EAST

SAN ANTONIO, TEXAS

ISLAS RD
PLAN AND PROFILE

PHASE 2A

PLAT NO.	22-11800121
JOB NO.	12044-05
DATE	MARCH 2024
DESIGNER	AC
CHECKED	DRAWN AC
SHEET	C2.00

Date: Mar 13, 2024, 1:42pm User ID: gcillebrew
File: P:\120\44\05\Design\Civil\ISLAS RD.dwg

THIS DOCUMENT HAS BEEN PRODUCED FROM MATERIAL THAT WAS STORED AND/OR TRANSMITTED ELECTRONICALLY AND MAY HAVE BEEN INADVERTENTLY ALTERED. RELY ONLY ON FINAL HARDCOPY MATERIALS BEARING THE CONSULTANT'S ORIGINAL SIGNATURE AND SEAL. AERIAL IMAGERY PROVIDED BY GOOGLE© UNLESS OTHERWISE NOTED. Imagery © 2016,CAPCOG,Digital Globe,Texas Orthoimagery Program, USDA Farm Service Agency.

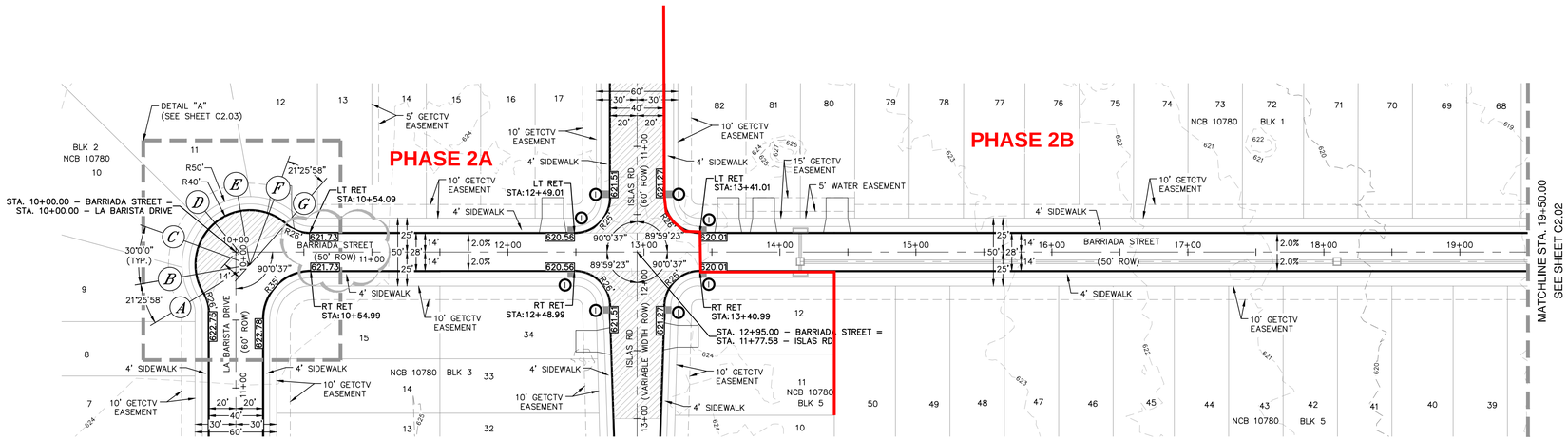

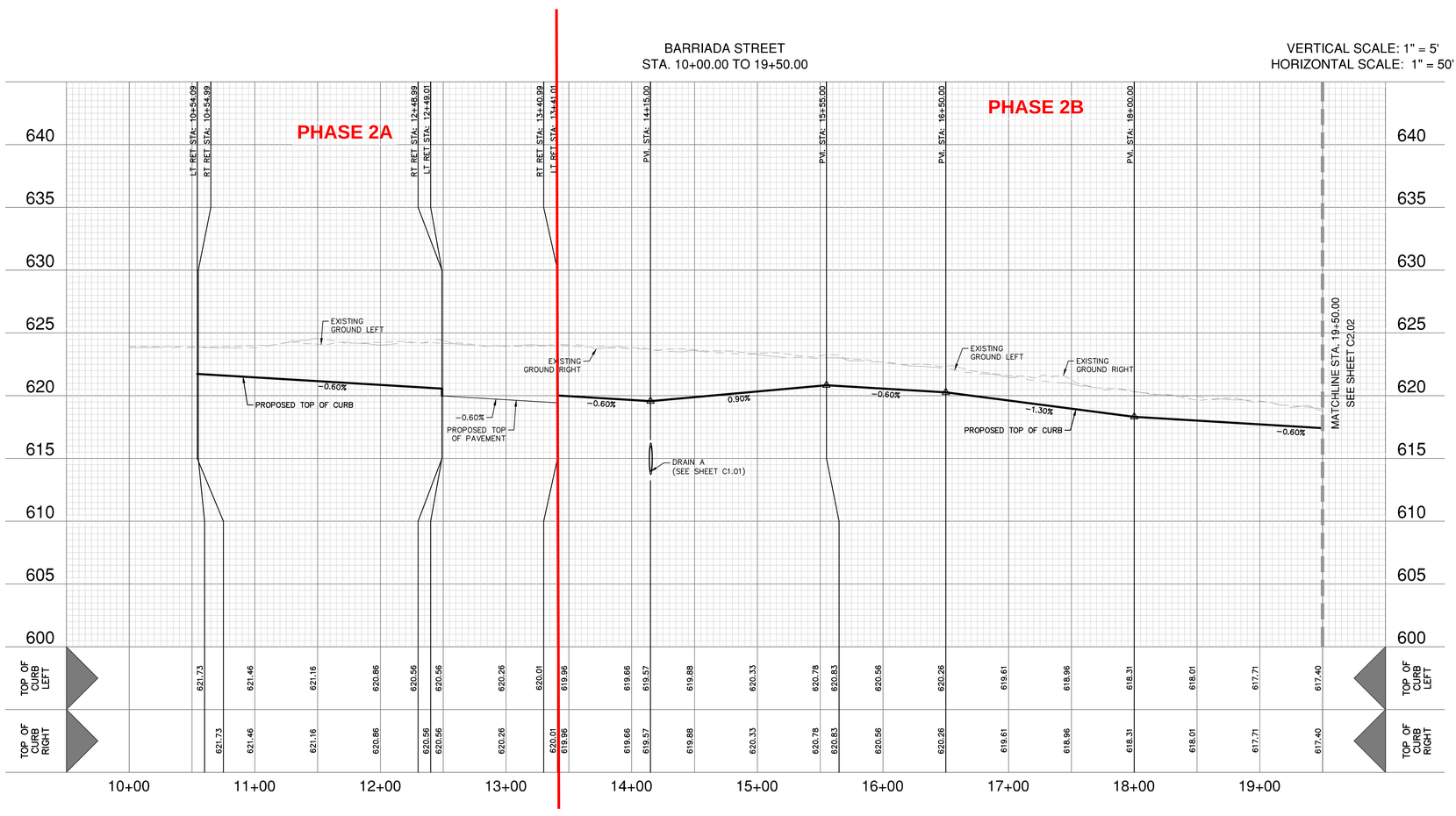

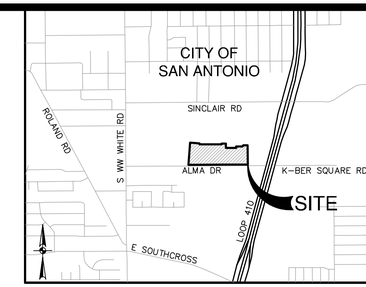

LOCATION MAP

NOT-TO-SCALE

SCALE: 1"= 50'

0' 50' 100' 150'

STREET LEGEND

PROJECT LIMITS	
WHEELCHAIR RAMP	
POINT OF CURVATURE	PC
POINT OF TANGENCY	PT
RETURN	RET
TOP OF CURB SPOT ELEVATION	975.50
WASHOUT CROWN SECTION	
PROPOSED SIDEWALK [SW] (HOMEBUILDER'S RESPONSIBILITY)	
PROPOSED CONCRETE SIDEWALK [SW] (CONTRACTOR'S RESPONSIBILITY)	
DRIVEWAY	

STREET NOTES:

1. A ROW PERMIT MUST BE OBTAINED BEFORE WORKING IN ROW. CONTRACTOR SHALL COORDINATE A TRAFFIC CONTROL PLAN FOR ALL WORK WITHIN THE ROW. ADDITIONAL WARNING SIGNS MAY BE RECOMMENDED BY THE ENGINEER ONCE THE ROADWAYS ARE CONSTRUCTED.
2. CONTRACTOR SHALL MATCH EXISTING PAVEMENT AT TIE-IN. IF EXISTING PAVEMENT ELEVATION DIFFERS SIGNIFICANTLY, CONTRACTOR SHALL NOTIFY THE ENGINEER PRIOR TO CONTINUING WORK.
3. SIDEWALKS SHALL BE CONSTRUCTED 3-FT FROM THE BACK OF CURB FOR ALL LOCATIONS WHERE THE SIDEWALK IS SHOWN OFFSET. REFER TO STREET DETAIL SHEET FOR SIDEWALK AND RAMP DETAILS.
4. NO PERMANENT STRUCTURES HIGHER THAN 3 FEET, AND LOWER THAN 8 FEET ABOVE THE PAVEMENT, INCLUDING STRUCTURES, WALLS, FENCES, AND VEGETATION, SHALL BE CONSTRUCTED OR ALLOWED WITHIN THE CLEAR VISION EASEMENT. CONTRACTOR SHALL GRADE AREAS WITHIN CLEAR VISION EASEMENTS SUCH THAT THE ELEVATION WITHIN THE CLEAR VISION EASEMENT IS NOT HIGHER THAN 3 FEET ABOVE THE ADJACENT TOP OF PAVEMENT.
5. DRIVEWAYS SHOWN ON THIS PLAN ARE FOR THE SOLE PURPOSE OF INDICATING A POTENTIAL CONFLICT WITH CURB RAMP, DRAINAGE INFRASTRUCTURE, OR OTHER CONFLICT. DRIVEWAY LOCATION IS SUBJECT TO CHANGE BASED ON HOME SELECTION AND FINAL LOT DESIGN.
6. CHANGES IN THE SIDEWALK LOCATION FOR A MAXIMUM LINEAR DISTANCE OF TWO HUNDRED (200) FEET ARE PERMITTED TO BE APPROVED BY THE FIELD INSPECTOR WITHOUT AMENDING THE STREET PLAN OR UTILITY LAYOUT PER UDC SECTION 35-506 (Q)(6).
7. THE CONSTRUCTION OF SIDEWALKS ADJACENT TO ALL 900 SERIES LOTS WILL BE THE RESPONSIBILITY OF THE DEVELOPER AS SHOWN ON THE OVERALL SIGNAGE PLAN.

NO.	REVISION	DATE
1.	REMOVED RAMPS	03/26/2024

3/26/2024

STATE OF TEXAS
REBECCA ANN CARROLL
92666
LICENSED
PROFESSIONAL ENGINEER

PAPE-DAWSON ENGINEERS
SAN ANTONIO I AUSTIN I HOUSTON I FORT WORTH I DALLAS
2000 NW LOOP 410 I SAN ANTONIO, TX 78213 I 210.375.9000
TEXAS ENGINEERING FIRM #470 I TEXAS SURVEYING FIRM #10028800

SPANISH TRAILS-UNIT 2 EAST

SAN ANTONIO, TEXAS

BARRIADA STREET
PLAN AND PROFILE (STA. 10+00.00 TO 19+50.00)

PLAT NO.	22-11800121
JOB NO.	12044-05
DATE	MARCH 2024
DESIGNER	AC
CHECKED	DRAWN AC
SHEET	C2.01

Date: Mar 26, 2024, 4:10pm User ID: gkilbchrew
File: P:\120\44\05\Design\Civil\BARRIADA STREET.dwg

THIS DOCUMENT HAS BEEN PRODUCED FROM MATERIAL THAT WAS STORED AND/OR TRANSMITTED ELECTRONICALLY AND MAY HAVE BEEN INADVERTENTLY ALTERED. RELY ONLY ON FINAL HARDCOPY MATERIALS BEARING THE CONSULTANT'S ORIGINAL SIGNATURE AND SEAL. AERIAL IMAGERY PROVIDED BY GOOGLE© UNLESS OTHERWISE NOTED. Imagery © 2016,CAPCOG,Digital Globe,Texas Orthoimagery Program, USDA Farm Service Agency.

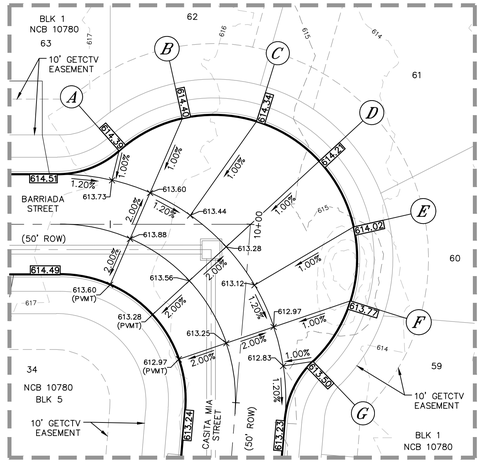

DETAIL "B"

SCALE: 1" = 20'

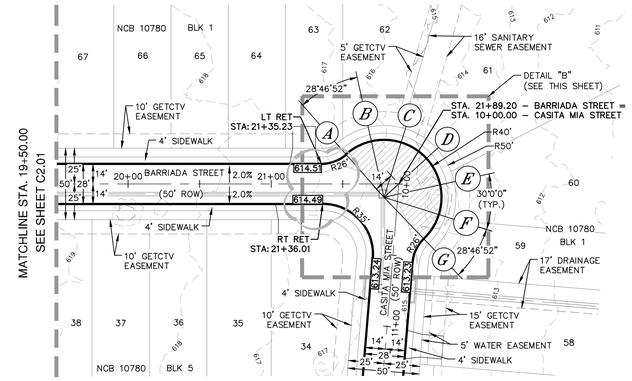

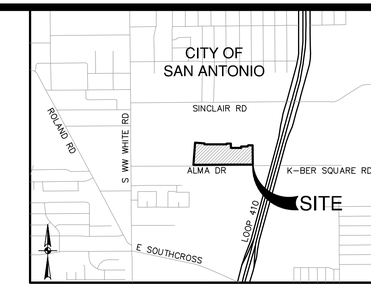

LOCATION MAP

NOT-TO-SCALE

SCALE: 1"= 50'

0' 50' 100' 150'

STREET LEGEND

PROJECT LIMITS	
WHEELCHAIR RAMP	①
POINT OF CURVATURE	PC
POINT OF TANGENCY	PT
RETURN	RET
TOP OF CURB SPOT ELEVATION	975.50
WASHOUT CROWN SECTION	
PROPOSED SIDEWALK [SW] (HOMEBUILDER'S RESPONSIBILITY)	
PROPOSED CONCRETE SIDEWALK [SW] (CONTRACTOR'S RESPONSIBILITY)	
DRIVEWAY	

BARRIADA STREET
STA. 19+50.00 TO END

VERTICAL SCALE: 1" = 5'
HORIZONTAL SCALE: 1" = 50'

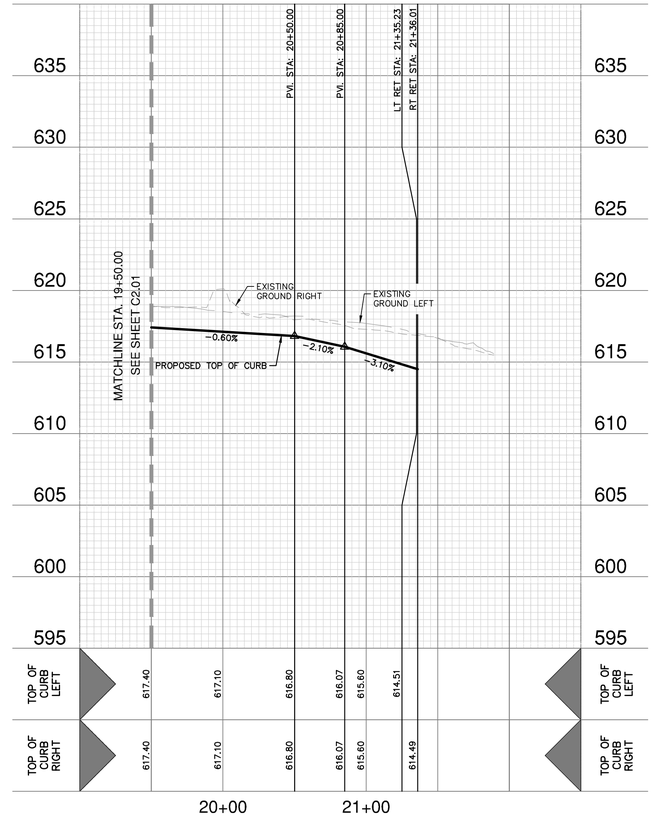

STREET NOTES:

1. A ROW PERMIT MUST BE OBTAINED BEFORE WORKING IN ROW. CONTRACTOR SHALL COORDINATE A TRAFFIC CONTROL PLAN FOR ALL WORK WITHIN THE ROW. ADDITIONAL WARNING SIGNS MAY BE RECOMMENDED BY THE ENGINEER ONCE THE ROADWAYS ARE CONSTRUCTED.
2. CONTRACTOR SHALL MATCH EXISTING PAVEMENT AT TIE-IN. IF EXISTING PAVEMENT ELEVATION DIFFERS SIGNIFICANTLY, CONTRACTOR SHALL NOTIFY THE ENGINEER PRIOR TO CONTINUING WORK.
3. SIDEWALKS SHALL BE CONSTRUCTED 3-FT FROM THE BACK OF CURB FOR ALL LOCATIONS WHERE THE SIDEWALK IS SHOWN OFFSET. REFER TO STREET DETAIL SHEET FOR SIDEWALK AND RAMP DETAILS.
4. NO PERMANENT STRUCTURES HIGHER THAN 3 FEET, AND LOWER THAN 8 FEET ABOVE THE PAVEMENT, INCLUDING STRUCTURES, WALLS, FENCES, AND VEGETATION, SHALL BE CONSTRUCTED OR ALLOWED WITHIN THE CLEAR VISION EASEMENT. CONTRACTOR SHALL GRADE AREAS WITHIN CLEAR VISION EASEMENTS SUCH THAT THE ELEVATION WITHIN THE CLEAR VISION EASEMENT IS NOT HIGHER THAN 3 FEET ABOVE THE ADJACENT TOP OF PAVEMENT.
5. DRIVEWAYS SHOWN ON THIS PLAN ARE FOR THE SOLE PURPOSE OF INDICATING A POTENTIAL CONFLICT WITH CURB RAMP, DRAINAGE INFRASTRUCTURE, OR OTHER CONFLICT. DRIVEWAY LOCATION IS SUBJECT TO CHANGE BASED ON HOME SELECTION AND FINAL LOT DESIGN.
6. CHANGES IN THE SIDEWALK LOCATION FOR A MAXIMUM LINEAR DISTANCE OF TWO HUNDRED (200) FEET ARE PERMITTED TO BE APPROVED BY THE FIELD INSPECTOR WITHOUT AMENDING THE STREET PLAN OR UTILITY LAYOUT PER UDC SECTION 35-506 (Q)(6).
7. THE CONSTRUCTION OF SIDEWALKS ADJACENT TO ALL 900 SERIES LOTS WILL BE THE RESPONSIBILITY OF THE DEVELOPER AS SHOWN ON THE OVERALL SIGNAGE PLAN.

NO.	REVISION	DATE
1.	REMOVED RAMPS	03/26/2024

3/26/2024

STATE OF TEXAS
REBECCA ANN CARROLL
92666
LICENSED
PROFESSIONAL ENGINEER

PAPE-DAWSON ENGINEERS
SAN ANTONIO I AUSTIN I HOUSTON I FORT WORTH I DALLAS
2000 NW LOOP 410 I SAN ANTONIO, TX 78213 I 210.375.9000
TEXAS ENGINEERING FIRM #470 I TEXAS SURVEYING FIRM #10028800

SPANISH TRAILS-UNIT 2 EAST

SAN ANTONIO, TEXAS

BARRIADA STREET
PLAN AND PROFILE (STA. 19+50.00 TO END)

PHASE 2B

PLAT NO.	22-11800121
JOB NO.	12044-05
DATE	MARCH 2024
DESIGNER	AC
CHECKED	DRAWN AC
SHEET	C2.02

Date: Mar 26, 2024, 4:11pm User ID: gcilebrew
File: P:\120\44\05\Design\Civil\BARRIADA STREET.dwg

THIS DOCUMENT HAS BEEN PRODUCED FROM MATERIAL THAT WAS STORED AND/OR TRANSMITTED ELECTRONICALLY AND MAY HAVE BEEN INADVERTENTLY ALTERED. RELY ONLY ON FINAL HARDCOPY MATERIALS BEARING THE CONSULTANT'S ORIGINAL SIGNATURE AND SEAL. AERIAL IMAGERY PROVIDED BY GOOGLE© UNLESS OTHERWISE NOTED. Imagery © 2016,CAPCOG,Digital Globe,Texas OrthoImagery Program, USDA Farm Service Agency.

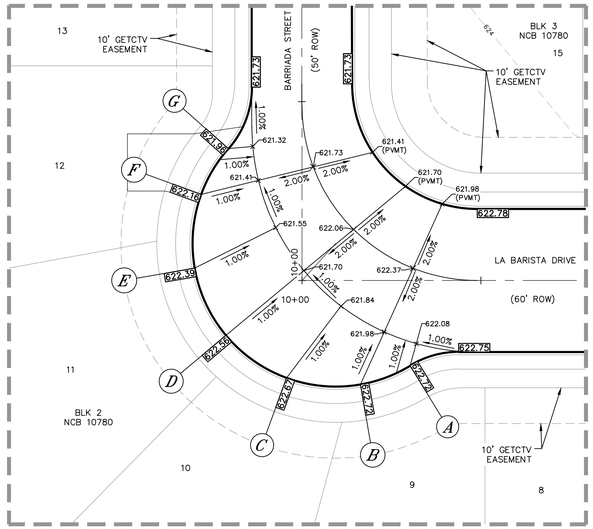

DETAIL "A"

SCALE: 1" = 20'

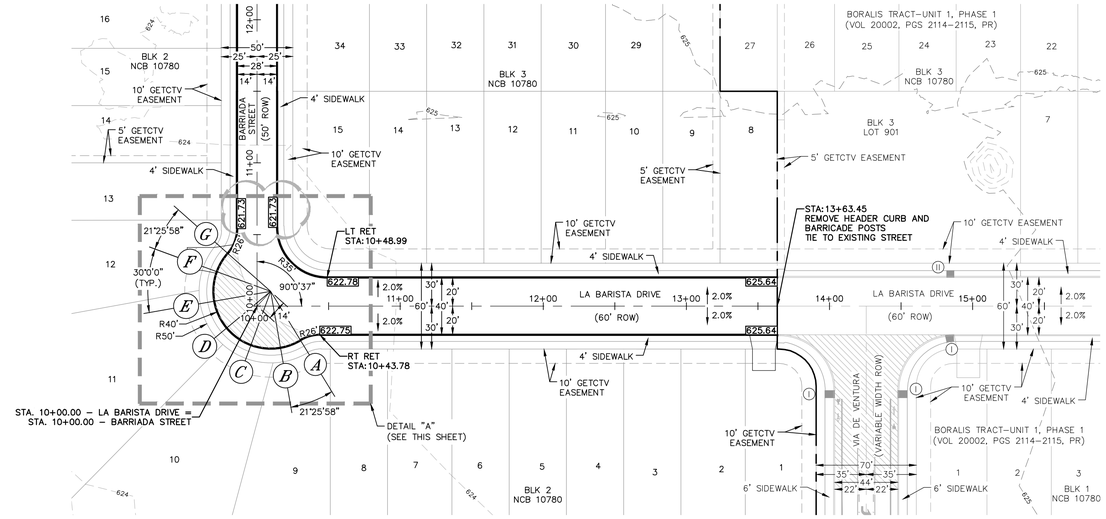

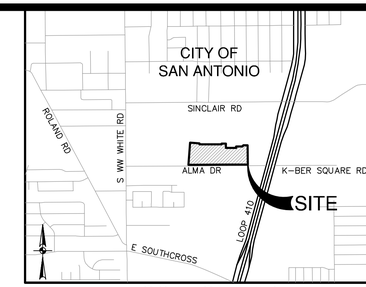

LOCATION MAP

NOT-TO-SCALE

SCALE: 1"= 50'

0' 50' 100' 150'

STREET LEGEND

PROJECT LIMITS	
WHEELCHAIR RAMP	①
POINT OF CURVATURE	PC
POINT OF TANGENCY	PT
RETURN	RET
TOP OF CURB SPOT ELEVATION	975.50
WASHOUT CROWN SECTION	
PROPOSED SIDEWALK [SW] (HOMEBUILDER'S RESPONSIBILITY)	
PROPOSED CONCRETE SIDEWALK [SW] (CONTRACTOR'S RESPONSIBILITY)	
DRIVEWAY	

LA BARISTA DRIVE
STA. 10+00.00 TO 13+63.45

VERTICAL SCALE: 1" = 5'
HORIZONTAL SCALE: 1" = 50'

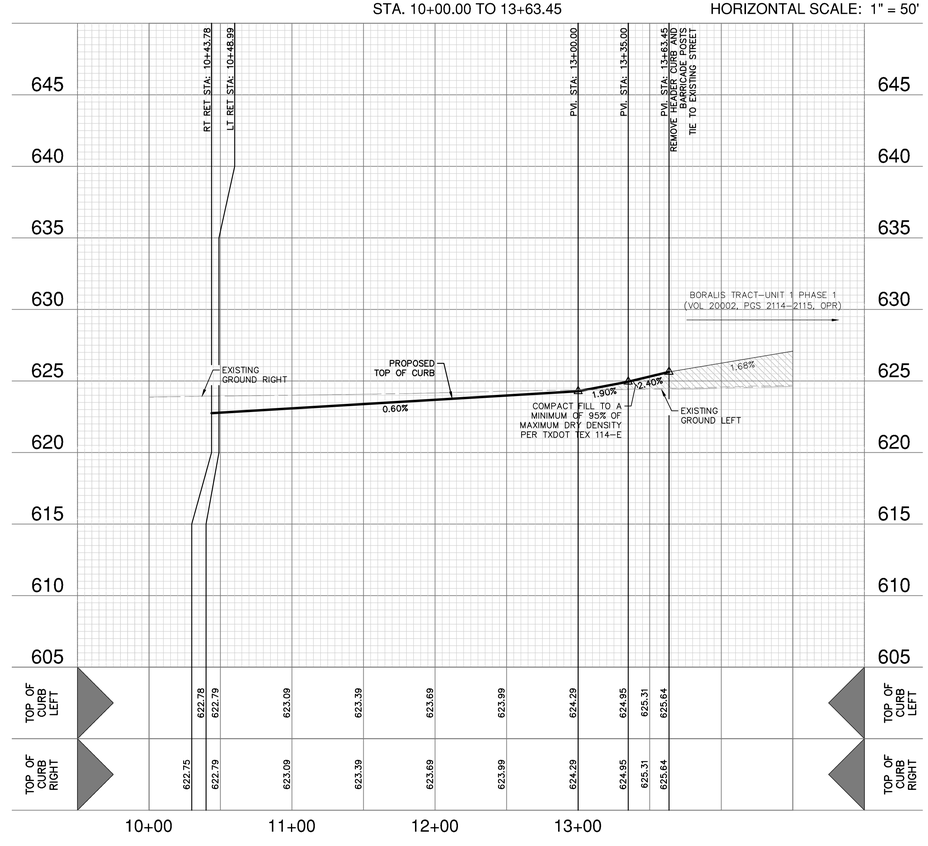

STREET NOTES:

1. A ROW PERMIT MUST BE OBTAINED BEFORE WORKING IN ROW. CONTRACTOR SHALL COORDINATE A TRAFFIC CONTROL PLAN FOR ALL WORK WITHIN THE ROW. ADDITIONAL WARNING SIGNS MAY BE RECOMMENDED BY THE ENGINEER ONCE THE ROADWAYS ARE CONSTRUCTED.
2. CONTRACTOR SHALL MATCH EXISTING PAVEMENT AT TIE-IN. IF EXISTING PAVEMENT ELEVATION DIFFERS SIGNIFICANTLY, CONTRACTOR SHALL NOTIFY THE ENGINEER PRIOR TO CONTINUING WORK.
3. SIDEWALKS SHALL BE CONSTRUCTED 3-FT FROM THE BACK OF CURB FOR ALL LOCATIONS WHERE THE SIDEWALK IS SHOWN OFFSET. REFER TO STREET DETAIL SHEET FOR SIDEWALK AND RAMP DETAILS.
4. NO PERMANENT STRUCTURES HIGHER THAN 3 FEET, AND LOWER THAN 8 FEET ABOVE THE PAVEMENT, INCLUDING STRUCTURES, WALLS, FENCES, AND VEGETATION, SHALL BE CONSTRUCTED OR ALLOWED WITHIN THE CLEAR VISION EASEMENT. CONTRACTOR SHALL GRADE AREAS WITHIN CLEAR VISION EASEMENTS SUCH THAT THE ELEVATION WITHIN THE CLEAR VISION EASEMENT IS NOT HIGHER THAN 3 FEET ABOVE THE ADJACENT TOP OF PAVEMENT.
5. DRIVEWAYS SHOWN ON THIS PLAN ARE FOR THE SOLE PURPOSE OF INDICATING A POTENTIAL CONFLICT WITH CURB RAMP, DRAINAGE INFRASTRUCTURE, OR OTHER CONFLICT. DRIVEWAY LOCATION IS SUBJECT TO CHANGE BASED ON HOME SELECTION AND FINAL LOT DESIGN.
6. CHANGES IN THE SIDEWALK LOCATION FOR A MAXIMUM LINEAR DISTANCE OF TWO HUNDRED (200) FEET ARE PERMITTED TO BE APPROVED BY THE FIELD INSPECTOR WITHOUT AMENDING THE STREET PLAN OR UTILITY LAYOUT PER UDC SECTION 35-506 (Q)(6).
7. THE CONSTRUCTION OF SIDEWALKS ADJACENT TO ALL 900 SERIES LOTS WILL BE THE RESPONSIBILITY OF THE DEVELOPER AS SHOWN ON THE OVERALL SIGNAGE PLAN.

NO.	REVISION	DATE
1.	REMOVED RAMPS	03/26/2024

3/26/2024

STATE OF TEXAS
REBECCA ANN CARROLL
92666
LICENSED
PROFESSIONAL ENGINEER

PAPE-DAWSON ENGINEERS
SAN ANTONIO I AUSTIN I HOUSTON I FORT WORTH I DALLAS
2000 NW LOOP 410 I SAN ANTONIO, TX 78213 I 210.375.9000
TEXAS ENGINEERING FIRM #470 I TEXAS SURVEYING FIRM #10028800

SPANISH TRAILS-UNIT 2 EAST

SAN ANTONIO, TEXAS

LA BARISTA DRIVE
PLAN AND PROFILE

PHASE 2A

PLAT NO.	22-11800121
JOB NO.	12044-05
DATE	MARCH 2024
DESIGNER	AC
CHECKED	DRAWN AC
SHEET	C2.03

Date: Mar 26, 2024, 4:25pm User ID: gkilledrew
File: P:\120\44\05\Design\Civil\LA BARISTA DRIVE.dwg

THIS DOCUMENT HAS BEEN PRODUCED FROM MATERIAL THAT WAS STORED AND/OR TRANSMITTED ELECTRONICALLY AND MAY HAVE BEEN INADVERTENTLY ALTERED. RELY ONLY ON FINAL HARDCOPY MATERIALS BEARING THE CONSULTANT'S ORIGINAL SIGNATURE AND SEAL. AERIAL IMAGERY PROVIDED BY GOOGLE® UNLESS OTHERWISE NOTED. Imagery © 2016,CAPCOG,Digital Globe,Texas Orthoimagery Program, USDA Farm Service Agency.

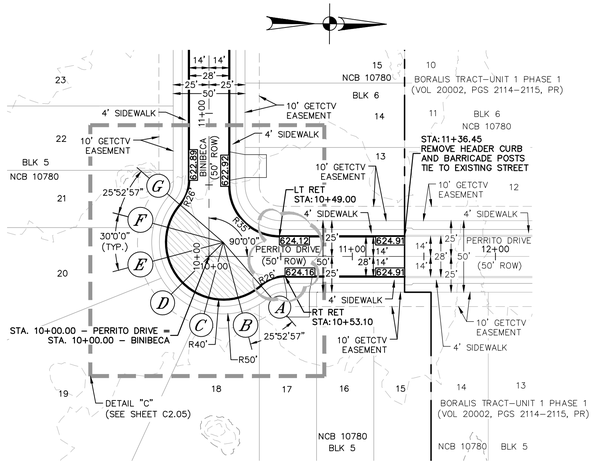

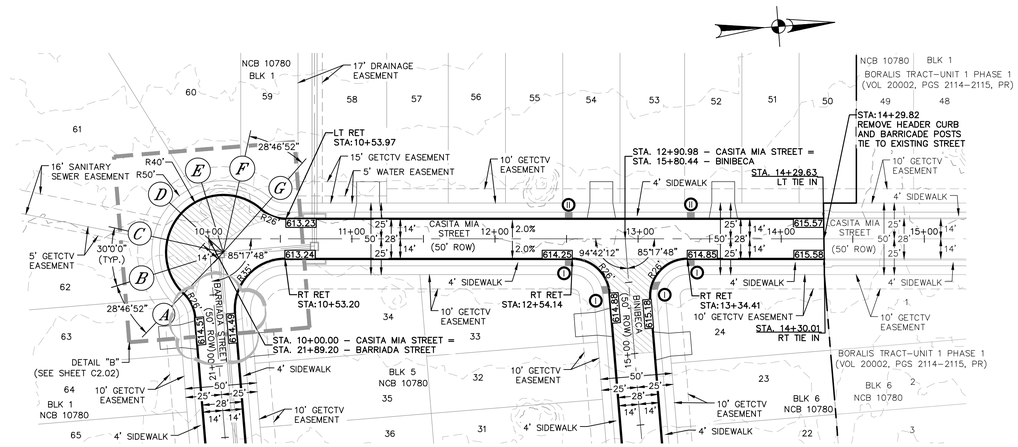

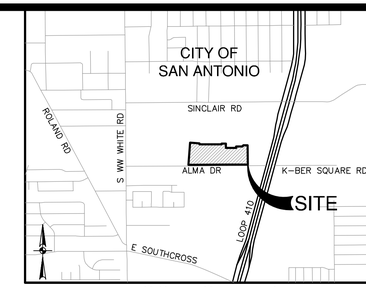

LOCATION MAP

NOT–TO–SCALE

SCALE: 1"= 50'

0' 50' 100' 150'

STREET LEGEND

PROJECT LIMITS	
WHEELCHAIR RAMP	①
POINT OF CURVATURE	PC
POINT OF TANGENCY	PT
RETURN	RET
TOP OF CURB SPOT ELEVATION	975.50
WASHOUT CROWN SECTION	
PROPOSED SIDEWALK [SW] (HOMEBUILDER'S RESPONSIBILITY)	
PROPOSED CONCRETE SIDEWALK [SW] (CONTRACTOR'S RESPONSIBILITY)	
DRIVEWAY	

PERRITO DRIVE
STA. 10+00.00 TO END

VERTICAL SCALE: 1" = 5'
HORIZONTAL SCALE: 1" = 50'

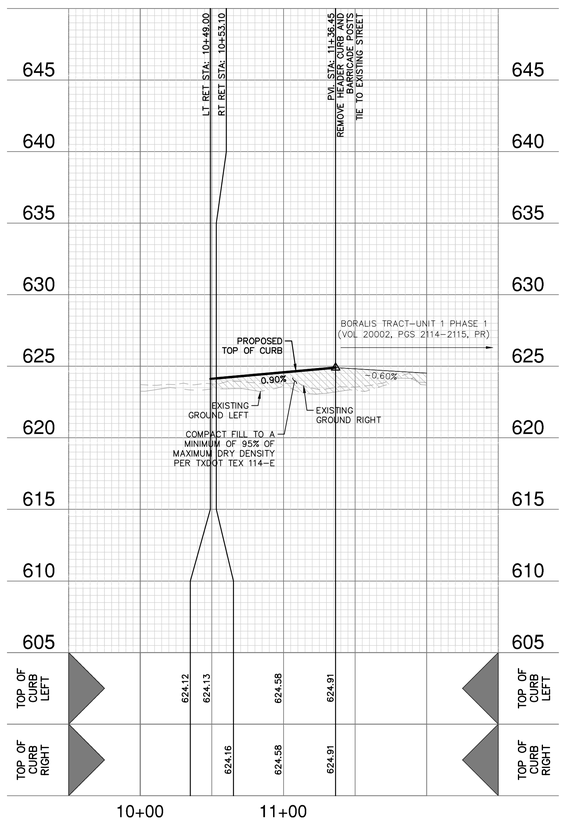

CASITA MIA STREET
STA. 10+00.00 TO END

VERTICAL SCALE: 1" = 5'
HORIZONTAL SCALE: 1" = 50'

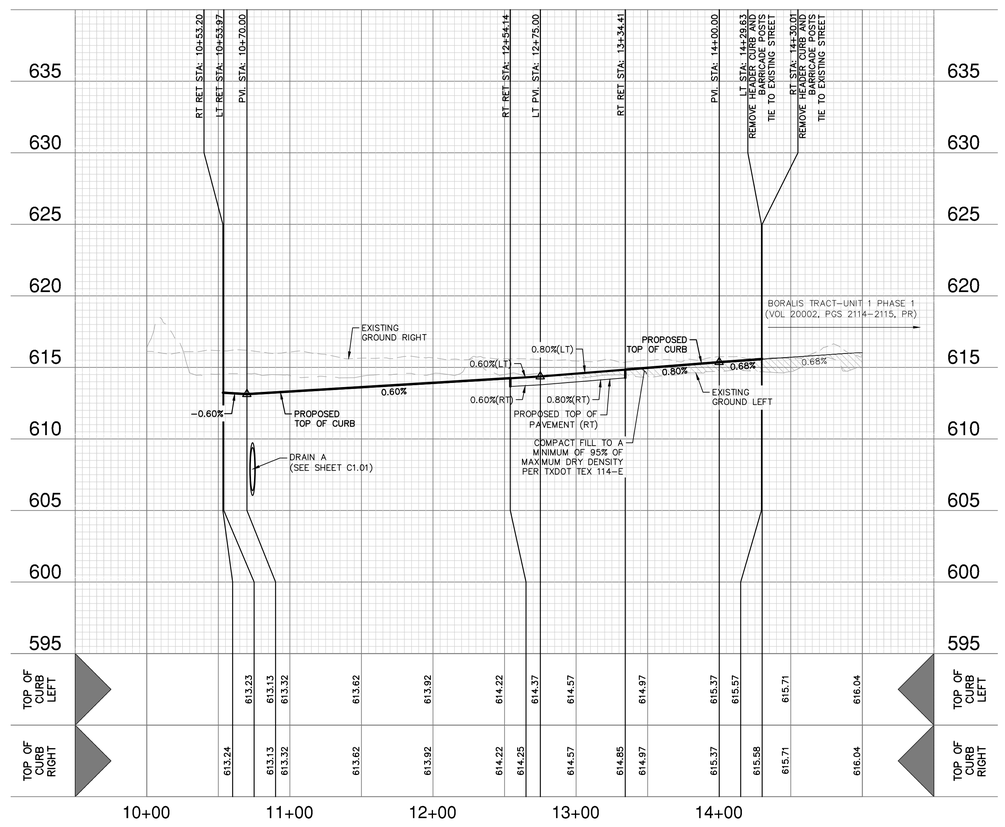

STREET NOTES:

1. A ROW PERMIT MUST BE OBTAINED BEFORE WORKING IN ROW. CONTRACTOR SHALL COORDINATE A TRAFFIC CONTROL PLAN FOR ALL WORK WITHIN THE ROW. ADDITIONAL WARNING SIGNS MAY BE RECOMMENDED BY THE ENGINEER ONCE THE ROADWAYS ARE CONSTRUCTED.
2. CONTRACTOR SHALL MATCH EXISTING PAVEMENT AT TIE–IN. IF EXISTING PAVEMENT ELEVATION DIFFERS SIGNIFICANTLY, CONTRACTOR SHALL NOTIFY THE ENGINEER PRIOR TO CONTINUING WORK.
3. SIDEWALKS SHALL BE CONSTRUCTED 3–FT FROM THE BACK OF CURB FOR ALL LOCATIONS WHERE THE SIDEWALK IS SHOWN OFFSET. REFER TO STREET DETAIL SHEET FOR SIDEWALK AND RAMP DETAILS.
4. NO PERMANENT STRUCTURES HIGHER THAN 3 FEET, AND LOWER THAN 8 FEET ABOVE THE PAVEMENT, INCLUDING STRUCTURES, WALLS, FENCES, AND VEGETATION, SHALL BE CONSTRUCTED OR ALLOWED WITHIN THE CLEAR VISION EASEMENT. CONTRACTOR SHALL GRADE AREAS WITHIN CLEAR VISION EASEMENTS SUCH THAT THE ELEVATION WITHIN THE CLEAR VISION EASEMENT IS NOT HIGHER THAN 3 FEET ABOVE THE ADJACENT TOP OF PAVEMENT.
5. DRIVEWAYS SHOWN ON THIS PLAN ARE FOR THE SOLE PURPOSE OF INDICATING A POTENTIAL CONFLICT WITH CURB RAMP, DRAINAGE INFRASTRUCTURE, OR OTHER CONFLICT. DRIVEWAY LOCATION IS SUBJECT TO CHANGE BASED ON HOME SELECTION AND FINAL LOT DESIGN.
6. CHANGES IN THE SIDEWALK LOCATION FOR A MAXIMUM LINEAR DISTANCE OF TWO HUNDRED (200) FEET ARE PERMITTED TO BE APPROVED BY THE FIELD INSPECTOR WITHOUT AMENDING THE STREET PLAN OR UTILITY LAYOUT PER UDC SECTION 35–506 (Q)(6).
7. THE CONSTRUCTION OF SIDEWALKS ADJACENT TO ALL 900 SERIES LOTS WILL BE THE RESPONSIBILITY OF THE DEVELOPER AS SHOWN ON THE OVERALL SIGNAGE PLAN.

NO.	REVISION	DATE
1.	REVISED RAMPS	03/26/2024

3/26/2024

STATE OF TEXAS
REBECCA ANN CARROLL
92666
LICENSED
PROFESSIONAL ENGINEER

PAPE-DAWSON ENGINEERS
SAN ANTONIO I AUSTIN I HOUSTON I FORT WORTH I DALLAS
2000 NW LOOP 410 I SAN ANTONIO, TX 78213 I 210.375.9000
TEXAS ENGINEERING FIRM #470 I TEXAS SURVEYING FIRM #10028800

SPANISH TRAILS-UNIT 2 EAST

SAN ANTONIO, TEXAS

CASITA MIA STREET & PERRITO DRIVE
PLAN AND PROFILE

PHASE 2B

PLAT NO.	22-11800121
JOB NO.	12044–05
DATE	MARCH 2024
DESIGNER	AC
CHECKED	DRAWN AC
SHEET	C2.04

Date: Mar 26, 2024, 4:26pm User ID: gkilbrew
File: P:\120\44\05\Design\Civil\CASITA MIA STREET & PERRITO DRIVE.dwg
THIS DOCUMENT HAS BEEN PRODUCED FROM MATERIAL THAT WAS STORED AND/OR TRANSMITTED ELECTRONICALLY AND MAY HAVE BEEN INADVERTENTLY ALTERED. RELY ONLY ON FINAL HARDCOPY MATERIALS BEARING THE CONSULTANT'S ORIGINAL SIGNATURE AND SEAL. AERIAL IMAGERY PROVIDED BY GOOGLE© UNLESS OTHERWISE NOTED. Imagery © 2016,CAPCOG,Digital Globe,Texas Orthoimagery Program, USDA Farm Service Agency.

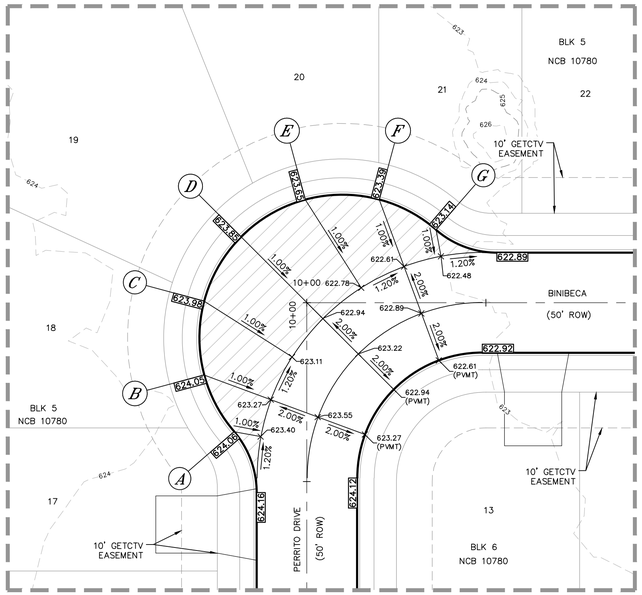

DETAIL "C"
SCALE: 1" = 20'

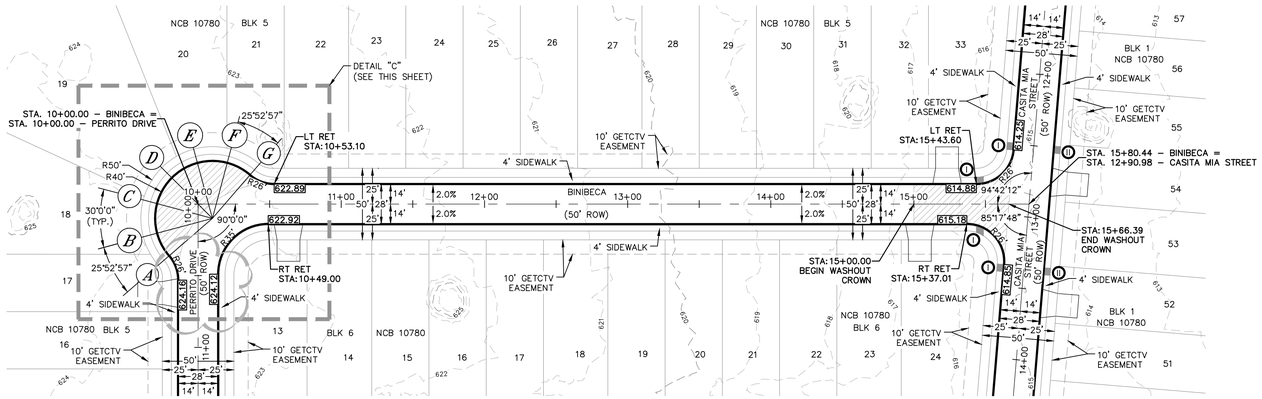

LOCATION MAP
NOT-TO-SCALE

SCALE: 1"= 50'
0' 50' 100' 150'

STREET LEGEND

PROJECT LIMITS	
WHEELCHAIR RAMP	①
POINT OF CURVATURE	PC
POINT OF TANGENCY	PT
RETURN	RET
TOP OF CURB SPOT ELEVATION	975.50
WASHOUT CROWN SECTION	
PROPOSED SIDEWALK [SW] (HOMEBUILDER'S RESPONSIBILITY)	
PROPOSED CONCRETE SIDEWALK [SW] (CONTRACTOR'S RESPONSIBILITY)	
DRIVEWAY	

BINIBECA
STA. 10+00.00 TO END

VERTICAL SCALE: 1" = 5'
HORIZONTAL SCALE: 1" = 50'

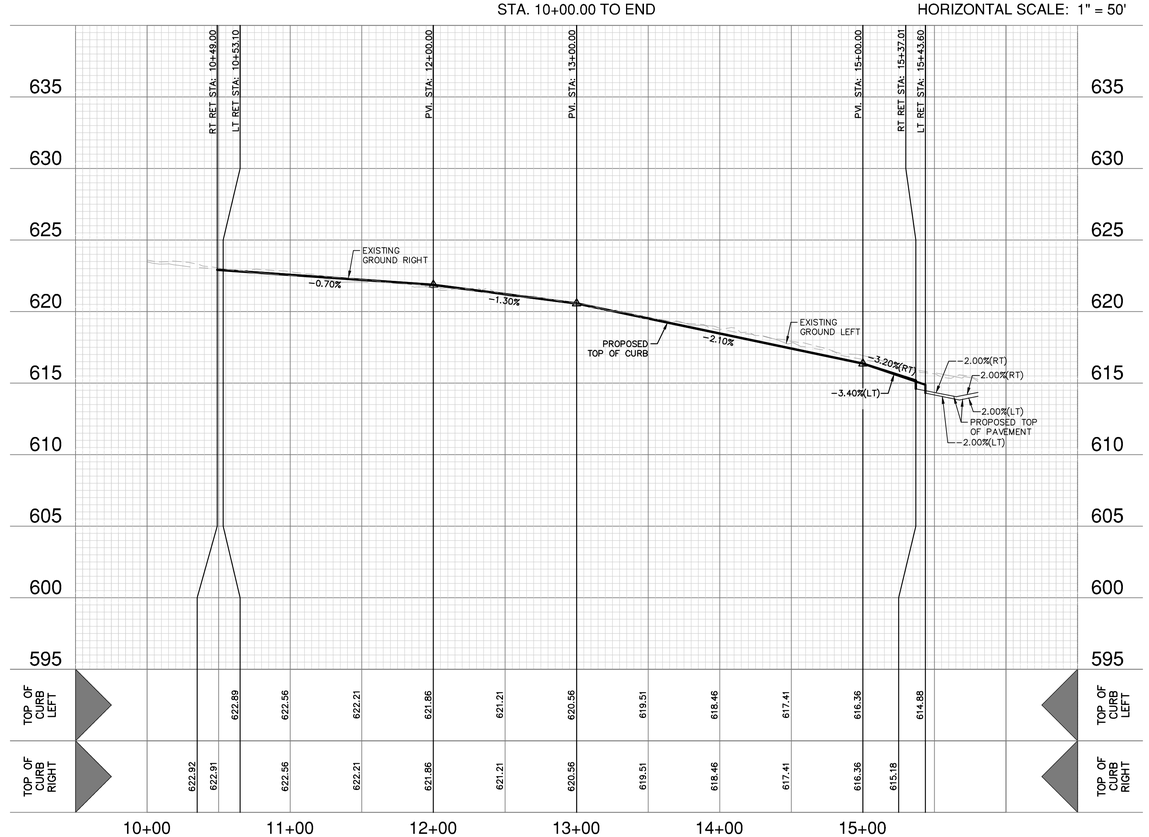

STREET NOTES:

1. A ROW PERMIT MUST BE OBTAINED BEFORE WORKING IN ROW. CONTRACTOR SHALL COORDINATE A TRAFFIC CONTROL PLAN FOR ALL WORK WITHIN THE ROW. ADDITIONAL WARNING SIGNS MAY BE RECOMMENDED BY THE ENGINEER ONCE THE ROADWAYS ARE CONSTRUCTED.
2. CONTRACTOR SHALL MATCH EXISTING PAVEMENT AT TIE–IN. IF EXISTING PAVEMENT ELEVATION DIFFERS SIGNIFICANTLY, CONTRACTOR SHALL NOTIFY THE ENGINEER PRIOR TO CONTINUING WORK.
3. SIDEWALKS SHALL BE CONSTRUCTED 3–FT FROM THE BACK OF CURB FOR ALL LOCATIONS WHERE THE SIDEWALK IS SHOWN OFFSET. REFER TO STREET DETAIL SHEET FOR SIDEWALK AND RAMP DETAILS.
4. NO PERMANENT STRUCTURES HIGHER THAN 3 FEET, AND LOWER THAN 8 FEET ABOVE THE PAVEMENT, INCLUDING STRUCTURES, WALLS, FENCES, AND VEGETATION, SHALL BE CONSTRUCTED OR ALLOWED WITHIN THE CLEAR VISION EASEMENT. CONTRACTOR SHALL GRADE AREAS WITHIN CLEAR VISION EASEMENTS SUCH THAT THE ELEVATION WITHIN THE CLEAR VISION EASEMENT IS NOT HIGHER THAN 3 FEET ABOVE THE ADJACENT TOP OF PAVEMENT.
5. DRIVEWAYS SHOWN ON THIS PLAN ARE FOR THE SOLE PURPOSE OF INDICATING A POTENTIAL CONFLICT WITH CURB RAMP, DRAINAGE INFRASTRUCTURE, OR OTHER CONFLICT. DRIVEWAY LOCATION IS SUBJECT TO CHANGE BASED ON HOME SELECTION AND FINAL LOT DESIGN.
6. CHANGES IN THE SIDEWALK LOCATION FOR A MAXIMUM LINEAR DISTANCE OF TWO HUNDRED (200) FEET ARE PERMITTED TO BE APPROVED BY THE FIELD INSPECTOR WITHOUT AMENDING THE STREET PLAN OR UTILITY LAYOUT PER UDC SECTION 35–506 (Q)(6).
7. THE CONSTRUCTION OF SIDEWALKS ADJACENT TO ALL 900 SERIES LOTS WILL BE THE RESPONSIBILITY OF THE DEVELOPER AS SHOWN ON THE OVERALL SIGNAGE PLAN.

NO.	REVISION	DATE
1.	REMOVED RAMPS	03/26/2024

3/26/2024
STATE OF TEXAS
REBECCA ANN CARROLL
92666
LICENSED
PROFESSIONAL ENGINEER

PAPE-DAWSON ENGINEERS
SAN ANTONIO I AUSTIN I HOUSTON I FORT WORTH I DALLAS
2000 NW LOOP 410 I SAN ANTONIO, TX 78213 I 210.375.9000
TEXAS ENGINEERING FIRM #470 I TEXAS SURVEYING FIRM #10028800

SPANISH TRAILS-UNIT 2 EAST
SAN ANTONIO, TEXAS

BINIBECA
PLAN AND PROFILE

PHASE 2B

PLAT NO.	22-11800121
JOB NO.	12044–05
DATE	MARCH 2024
DESIGNER	AC
CHECKED	DRAWN AC
SHEET	C2.05

Date: Mar 26, 2024, 4:27pm User ID: gkillebrew
File: P:\120\44\05\Design\Civil\BINIBECA.dwg

THIS DOCUMENT HAS BEEN PRODUCED FROM MATERIAL THAT WAS STORED AND/OR TRANSMITTED ELECTRONICALLY AND MAY HAVE BEEN INADVERTENTLY ALTERED. RELY ONLY ON FINAL HARDCOPY MATERIALS BEARING THE CONSULTANT'S ORIGINAL SIGNATURE AND SEAL. AERIAL IMAGERY PROVIDED BY GOOGLE© UNLESS OTHERWISE NOTED. Imagery © 2016,CAPCOG,Digital Globe,Texas Orthoimagery Program, USDA Farm Service Agency.

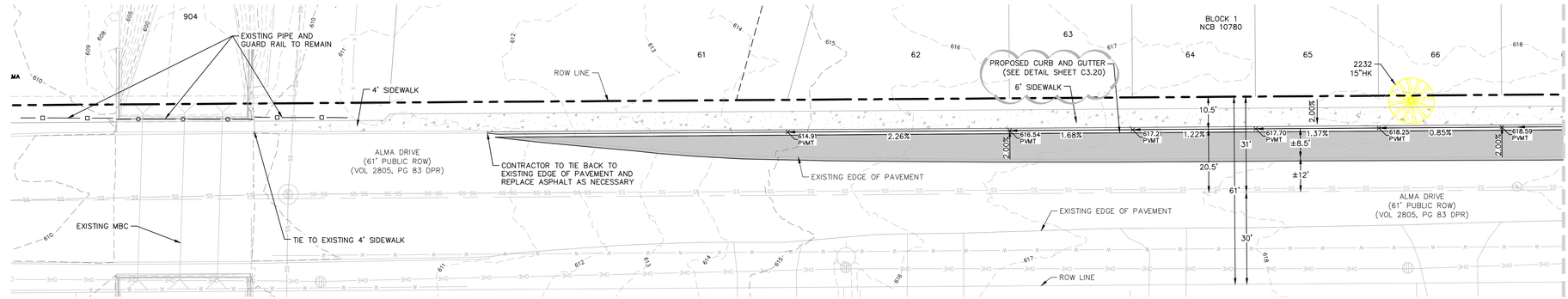

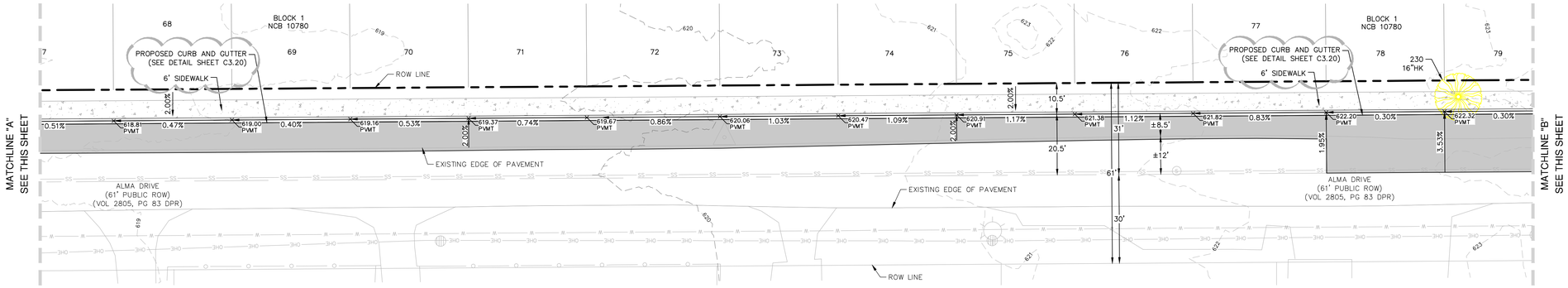

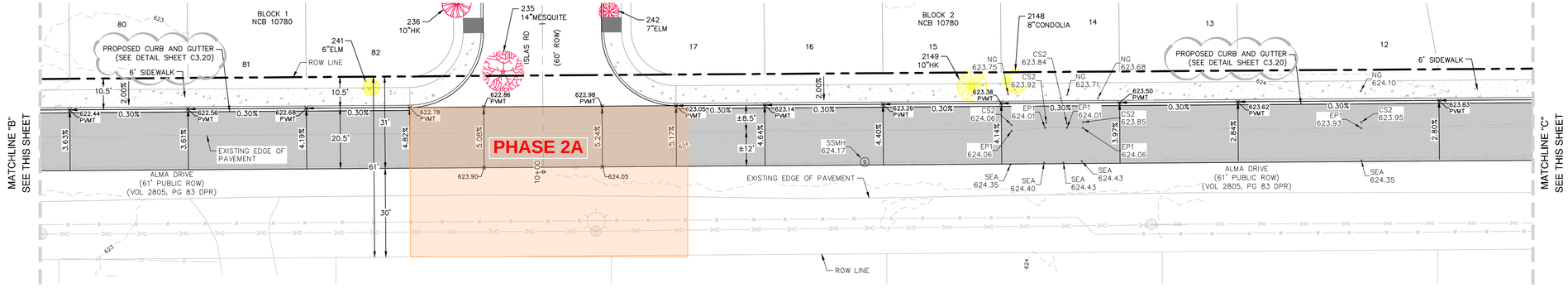

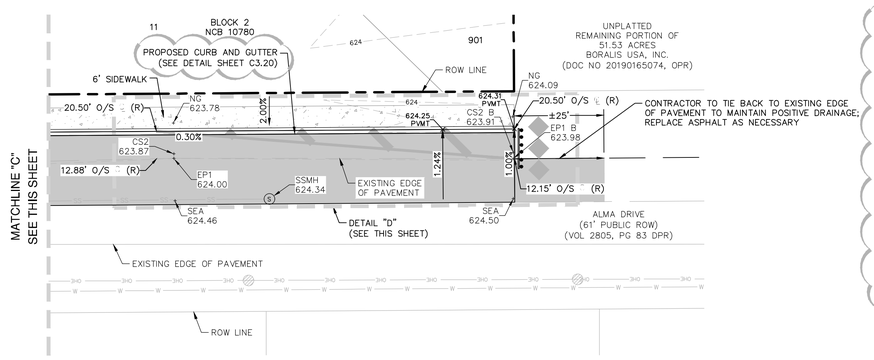

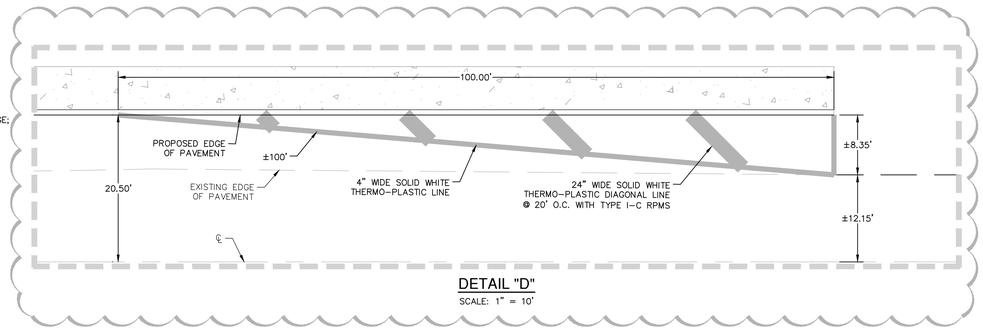

DETAIL "D"

SCALE: 1" = 10'

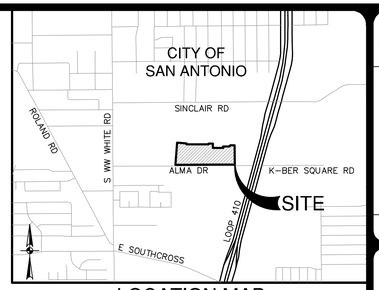

LOCATION MAP

NOT-TO-SCALE

SCALE: 1"= 20'

0' 20' 40' 60'

LEGEND

- PROPERTY LINE
- EXISTING CURB
- PROPOSED CURB
- END OF ROAD MARKER OM4-3
- HEADER CURB W/ BARRICADE POSTS
- PROPOSED PAVEMENT
- PROPOSED SIDEWALK
- EXEMPT & REMOVED TREES (NOT COUNTED)
- SIGNIFICANT & REMOVED TREES (EXISTING ROW, NON-EXEMPT)

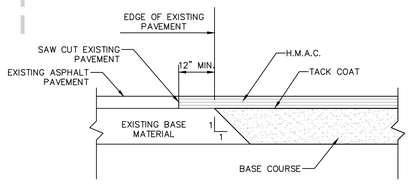

ASPHALT/ASPHALT JUNCTURE DETAIL

NOT-TO-SCALE

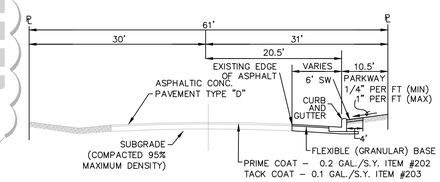

ALMA DRIVE WIDENING - TYPICAL SECTION

NOT-TO-SCALE

NO.	REVISION	DATE
1.	ADDED STREETS TO BE REMOVED	03/28/24
2.	ADDED STRIPING DETAIL AND CURB AND GUTTER CALLOUTS	04/16/24

4/16/2024

STATE OF TEXAS
REBECCA ANN CARROLL
92666
LICENSED PROFESSIONAL ENGINEER

PAPE-DAWSON ENGINEERS
SAN ANTONIO I AUSTIN I HOUSTON I FORT WORTH I DALLAS
2000 NW LOOP 410 I SAN ANTONIO, TX 78213 I 210.375.9000
TEXAS ENGINEERING FIRM #470 I TEXAS SURVEYING FIRM #10028800

SPANISH TRAILS-UNIT 2 EAST

SAN ANTONIO, TEXAS

ALMA DRIVE WIDENING AND SIDEWALK IMPROVEMENTS

PHASE 2B

PLAT NO. 22-11800121
JOB NO. 12044-05
DATE APRIL 2024
DESIGNER AC
CHECKED DRAWN AC
SHEET C2.06

Date: Apr 16, 2024, 3:23pm User ID: dgillebrew
File: P:\12\44\05\Design\Civil\ST1204405-ALMA DRIVE.dwg

THIS DOCUMENT HAS BEEN PRODUCED FROM MATERIAL THAT WAS STORED AND/OR TRANSMITTED ELECTRONICALLY AND MAY HAVE BEEN INADVERTENTLY ALTERED. RELY ONLY ON FINAL HARDCOPY MATERIALS BEARING THE CONSULTANT'S ORIGINAL SIGNATURE AND SEAL. AERIAL IMAGERY PROVIDED BY GOOGLE© UNLESS OTHERWISE NOTED. Imagery © 2016,CAPCOG,Digital Globe,Texas OrthoImagery Program, USDA Farm Service Agency.

RECOMMENDED PAVEMENT SECTION

DESIGN BASED ON THE MINIMUM REQUIREMENTS OF THE UDC AND THE GEOTECH ENGINEERING REPORT PREPARED BY INTEC, PROJECT NO. S201498-P DATED JANUARY 31, 2021. FOR PAVEMENT MATERIAL AND CONSTRUCTION REQUIREMENTS, CONTRACTOR SHALL MEET OR EXCEED ALL PAVEMENT RECOMMENDATIONS.

Classification	TYPE "D" HMAC SURFACE COURSE TXDOT ITEM 340, in.	TYPE "C" HMAC SURFACE COURSE TXDOT ITEM 340, in.	AGGREGATE BASE, in TYPE A1-2 TXDOT ITEM 247	STABILIZED SUBGRADE, in	STRUCTURAL NUMBER
(1) LOCAL A BARRIADA STREET ISLAS RD (STA. 11+91.58 TO END) CASITA MIA STREET BINIBECA PERRITO DRIVE	2.0	–	10.0	6*	2.28
(2) LOCAL B ISLAS RD (STA. 10+00.00 TO 11+91.58) LA BARISTA DRIVE ALMA DRIVE	3.0	–	19.0	6*	3.98

SUBGRADE NOTES (*):

- BASED ON THE SOILS ENCOUNTERED IN THE BORINGS, BROWN CLAY OR TAN MARL ARE ANTICIPATED IN THE PAVEMENT SUBGRADE AREAS.
- WE ANTICIPATE THE FINAL PAVEMENT SUBGRADE PLASTICITY INDEX VALUE TO BE EITHER LESS THAN OR EQUAL TO 20 OR GREATER THAN 20.
- SUBGRADE TREATMENT IS NOT NEEDED IF:
  - THE FINAL PAVEMENT SUBGRADE PLASTICITY INDEX VALUES ARE LESS THAN OR EQUAL TO 20 OR
  - ANY SURFICIAL CLAYS ARE REMOVED AND REPLACED WITH FILL MATERIAL WITH PLASTICITY INDEX VALUES LESS THAN OR EQUAL TO 20.
- SUBGRADE TREATMENT, TO A DEPTH OF 6 INCHES, IS NEEDED IF:
  - THICKER CLAY (PLASTICITY INDEX VALUES GREATER THAN 20) STRATUM IS ENCOUNTERED.
  - THE SUBGRADE SOILS SHOULD BE TESTED FOR SOIL SULFATE CONTENT PRIOR TO TREATMENT. IF THE SOIL SULFATE CONTENT IS OVER 3000 PPM, AN ALTERNATE PROCEDURE WILL BE NEEDED.
  - LIME APPLICATION RATE (5 PERCENT) 27 LBS PER SQ YARD FOR 6 INCH DEPTH OF TREATMENT MAY BE USED.
  - CEMENT MAY BE USED IN LIEU OF LIME. PLEASE CONTACT INTEC TO DETERMINE THE CEMENT APPLICATION RATE AT THE TIME OF CONSTRUCTION.

GENERAL NOTES (**):

- INPUT PARAMETERS USED IN PAVEMENT SECTION CALCULATIONS ARE SHOWN IN TABLE NO. 7. PLEASE CALL US TO PROVIDE PAVEMENT RECOMMENDATIONS, IF NEEDED, FOR DIFFERENT INPUT VALUES.
- IF REPETITIVE TRUCK OR HEAVY TRUCK TRAFFIC IS ANTICIPATED, PLEASE CONTACT US FOR REVISED PAVEMENT RECOMMENDATIONS.
- PAVEMENT SECTION RECOMMENDATIONS ARE BASED ON A SUBGRADE CBR VALUE OF 4.0. THE PAVEMENT RECOMMENDATIONS ARE NOT BASED ON THE SHRINK / SWELL CHARACTERISTICS OF THE UNDERLYING SOILS. THE PAVEMENT CAN EXPERIENCE CRACKING AND DEFORMATION DUE TO SHRINKAGE AND SWELLING CHARACTERISTICS OF THE SOILS AS DESCRIBED IN THE VERTICAL MOVEMENTS SECTION OF THIS REPORT.
- IF WATER IS ALLOWED TO GET UNDERNEATH THE ASPHALT OR IF MOISTURE CONTENT OF THE BASE OR SUBGRADE CHANGES SIGNIFICANTLY, THEN PAVEMENT DISTRESS WILL OCCUR. MOISTURE PENETRATION UNDERNEATH THE ASPHALT PAVEMENT SURFACE MAY BE REDUCED BY INSTALLING A VERTICAL MOISTURE BARRIER, SUCH AS DEEPER CURBS; CURBS EXTENDING A MINIMUM OF 6 INCHES INTO SUBGRADE.

FILL MATERIAL:

- FILL USED TO RAISE THE GRADE – APPROVED FILL MATERIAL SHOULD HAVE A MINIMUM CBR VALUE OF 4.0 AND A MAXIMUM PLASTICITY INDEX VALUE OF 20. LIME OR CEMENT APPLICATION RATES SHOULD BE RE-EVALUATED AND TESTED FOR SOIL SULFATE CONTENT PRIOR TO USE OF THE FILL MATERIAL.
- THE FILL MATERIAL SHOULD BE APPROVED BY THE GEOTECHNICAL ENGINEER, FREE OF DELETERIOUS MATERIAL, AND THE GRAVEL SIZE SHOULD NOT EXCEED 3 INCHES IN SIZE. THE MATERIAL SHOULD BE PLACED AND COMPACTED AS PER APPLICABLE CITY / COUNTY GUIDELINES.

SUBGRADE VERIFICATION:

- AT THE TIME OF CONSTRUCTION, THE FINAL PAVEMENT SUBGRADE SHOULD BE OBSERVED AND VERIFIED BY A REPRESENTATIVE OF INTEC.

GENERAL NOTES:

1. PAVEMENT DESIGN THICKNESS BASED ON GEOTECHNICAL REPORT. SEE TABLE FOR STRUCTURAL NUMBER CALCULATION. REFERENCE PROJECT GEOTECHNICAL REPORT AND PROJECT SPECIFICATIONS FOR ADDITIONAL REQUIREMENTS AND ALTERNATE PAVEMENT SECTIONS.
2. A GEOTECHNICAL ENGINEERING REPRESENTATIVE SHALL BE RETAINED TO: (1) OBSERVE THE SITE PREPARATION AND SUBGRADE OPERATIONS; (2) EVALUATE THE ACTUAL SUBGRADE MATERIAL CLASSIFICATION; AND (3) VERIFY THAT RECOMMENDATIONS ARE FOLLOWED. THE ACTUAL SUBGRADE CONDITION AT A PARTICULAR LOCATION WILL NEED TO BE EVALUATED DURING CONSTRUCTION ONCE THE SUBGRADE IS CUT/FILLED TO THE PROPER GRADE.
3. CONTRACTOR SHALL BE RESPONSIBLE FOR COORDINATING MATERIAL TESTING. TESTING TO BE PAID BY OWNER.
4. CONTRACTOR MAY LEAVE VERTICAL CUT BANKS AT R.O.W. LINE AND MEDIANS PROVIDED PROJECT GEOTECHNICAL ENGINEER DETERMINES ROCK IS COMPETENT TO STAND ON ITS OWN.
5. IF ALTERNATE PAVEMENT SECTION CHOSEN, BEXAR COUNTY SHALL BE PROVIDED WITH REVISED CONSTRUCTION PLANS INDICATING SELECTED PAVEMENT DESIGN PRIOR TO CONSTRUCTION.
6. PAVEMENT SECTIONS ARE SUBJECT TO CHANGE DUE TO RETESTING OF SOIL AFTER STREET EXCAVATION HAS BEEN DONE TO TOP OF CURB.
7. CONTRACTOR SHALL CONTACT ENGINEER 24 HRS IN ADVANCE FOR FIELD OBSERVATION DURING STREET CONSTRUCTION. CONTRACTOR WILL BE REQUIRED TO CONTACT ENGINEER FOR INSPECTION OF THE SUBGRADE, BASE, ASPHALT, AND CURB.

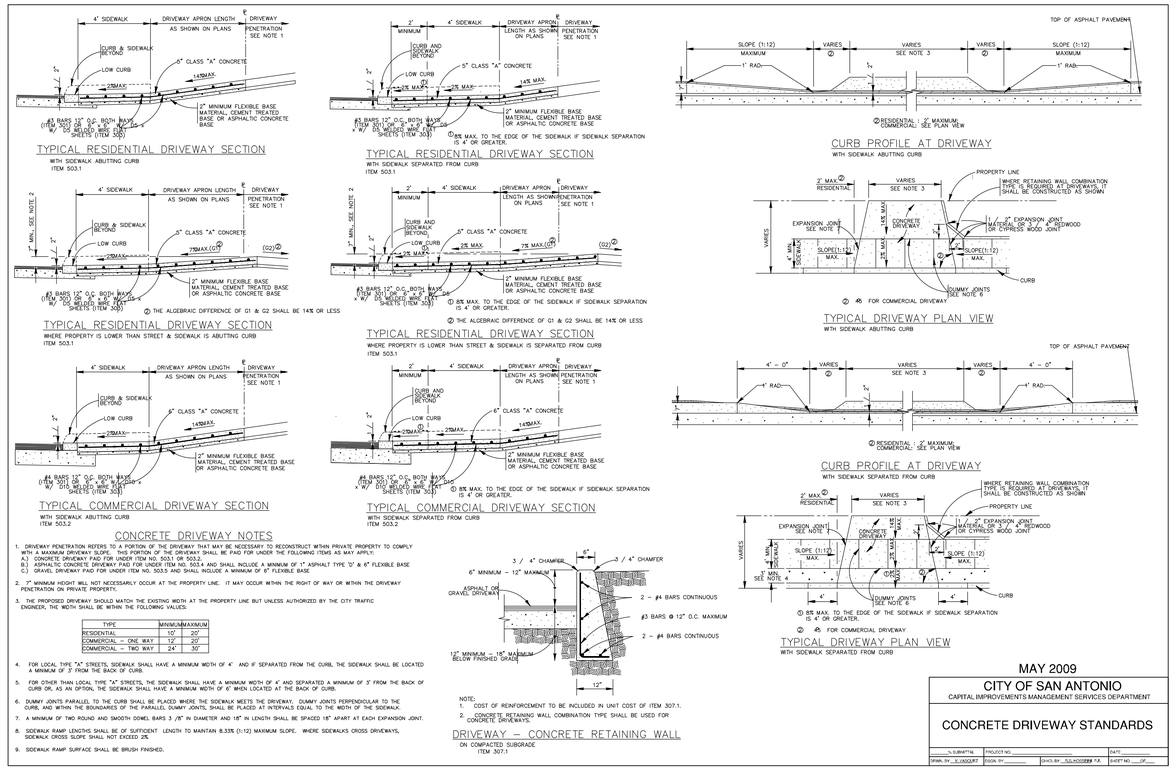

CONCRETE DRIVEWAY NOTES

1. DRIVEWAY PENETRATION REFERS TO A PORTION OF THE DRIVEWAY THAT MAY BE NECESSARY TO RECONSTRUCT WITHIN PRIVATE PROPERTY TO COMPLY WITH A MAXIMUM DRIVEWAY SLOPE. THIS PORTION OF THE DRIVEWAY SHALL BE PAID FOR UNDER THE FOLLOWING ITEMS AS MAY APPLY:
   A.) CONCRETE DRIVEWAY PAID FOR UNDER ITEM NO. 503.1 OR 503.2.
   B.) ASPHALTIC CONCRETE DRIVEWAY PAID FOR UNDER ITEM NO. 503.4 AND SHALL INCLUDE A MINIMUM OF 1" ASPHALT TYPE 'D' & 6" FLEXIBLE BASE
   C.) GRAVEL DRIVEWAY PAID FOR UNDER ITEM NO. 503.5 AND SHALL INCLUDE A MINIMUM OF 6" FLEXIBLE BASE
2. 1" MINIMUM HEIGHT WILL NOT NECESSARILY OCCUR AT THE PROPERTY LINE. IT MAY OCCUR WITHIN THE RIGHT OF WAY OR WITHIN THE DRIVEWAY PENETRATION ON PRIVATE PROPERTY.
3. THE PROPOSED DRIVEWAY SHOULD MATCH THE EXISTING WIDTH AT THE PROPERTY LINE BUT UNLESS AUTHORIZED BY THE CITY TRAFFIC ENGINEER, THE WIDTH SHALL BE WITHIN THE FOLLOWING VALUES:

TYPE	MINIMUM	MAXIMUM
RESIDENTIAL	10'	20'
COMMERCIAL – ONE WAY	12'	20'
COMMERCIAL – TWO WAY	24'	30'

4. FOR LOCAL TYPE "A" STREETS, SIDEWALK SHALL HAVE A MINIMUM WIDTH OF 4' AND IF SEPARATED FROM THE CURB, THE SIDEWALK SHALL BE LOCATED A MINIMUM OF 3' FROM THE BACK OF CURB.
5. FOR OTHER THAN LOCAL TYPE "A" STREETS, THE SIDEWALK SHALL HAVE A MINIMUM WIDTH OF 4' AND SEPARATED A MINIMUM OF 3' FROM THE BACK OF CURB OR, AS AN OPTION, THE SIDEWALK SHALL HAVE A MINIMUM WIDTH OF 6' WHICH LOCATED AT THE BACK OF CURB.
6. DUMMY JOINTS PARALLEL TO THE CURB SHALL BE PLACED WHERE THE SIDEWALK MEETS THE DRIVEWAY. DUMMY JOINTS PERPENDICULAR TO THE CURB, AND WITHIN THE BOUNDARIES THE PARALLEL DUMMY JOINTS, SHALL BE PLACED AT INTERVALS EQUAL TO THE WIDTH OF THE SIDEWALK.
7. A MINIMUM OF TWO ROUND AND SMOOTH DOWEL BARS 3 /8" IN DIAMETER AND 18" IN LENGTH SHALL BE SPACED 18" APART AT EACH EXPANSION JOINT.
8. SIDEWALK RAMP LENGTHS SHALL BE OF SUFFICIENT LENGTH TO MAINTAIN 8.33% (1:12) MAXIMUM SLOPE. WHERE SIDEWALKS CROSS DRIVEWAYS, SIDEWALK CROSS SLOPE SHALL NOT EXCEED 2%.
9. SIDEWALK RAMP SURFACE SHALL BE BRUSH FINISHED.

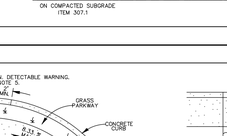

NOTE:
1. COST OF REINFORCEMENT TO BE INCLUDED IN UNIT COST OF ITEM 307.1.
2. CONCRETE RETAINING WALL COMBINATION TYPE SHALL BE USED FOR CONCRETE DRIVEWAYS.

MAY 2009

CITY OF SAN ANTONIO
CAPITAL IMPROVEMENTS MANAGEMENT SERVICES DEPARTMENT

CONCRETE DRIVEWAY STANDARDS

NO.	REVISION	DATE
1	REMOVED CURB DETAIL	04/02/2024

4/16/2024

STATE OF TEXAS
REBECCA ANN CARROLL
92666
LICENSED
PROFESSIONAL ENGINEER

PAPE-DAWSON ENGINEERS
SAN ANTONIO I AUSTIN I HOUSTON I FORT WORTH I DALLAS
2000 NW LOOP 410 I SAN ANTONIO, TX 78213 I 210.375.9000
TEXAS ENGINEERING FIRM #470 I TEXAS SURVEYING FIRM #10028800

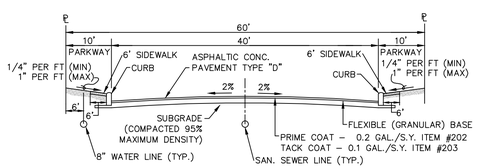

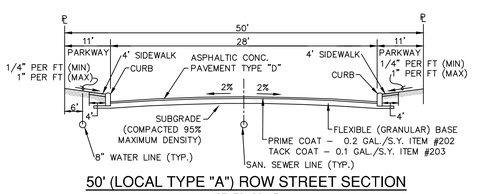

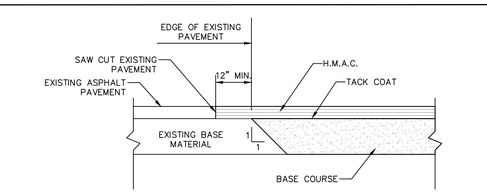

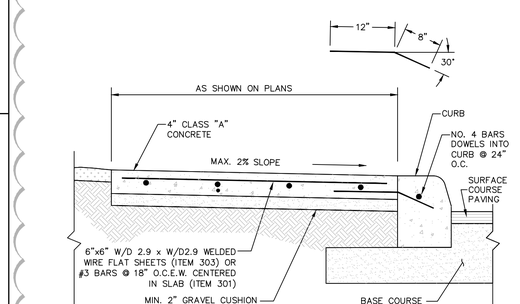

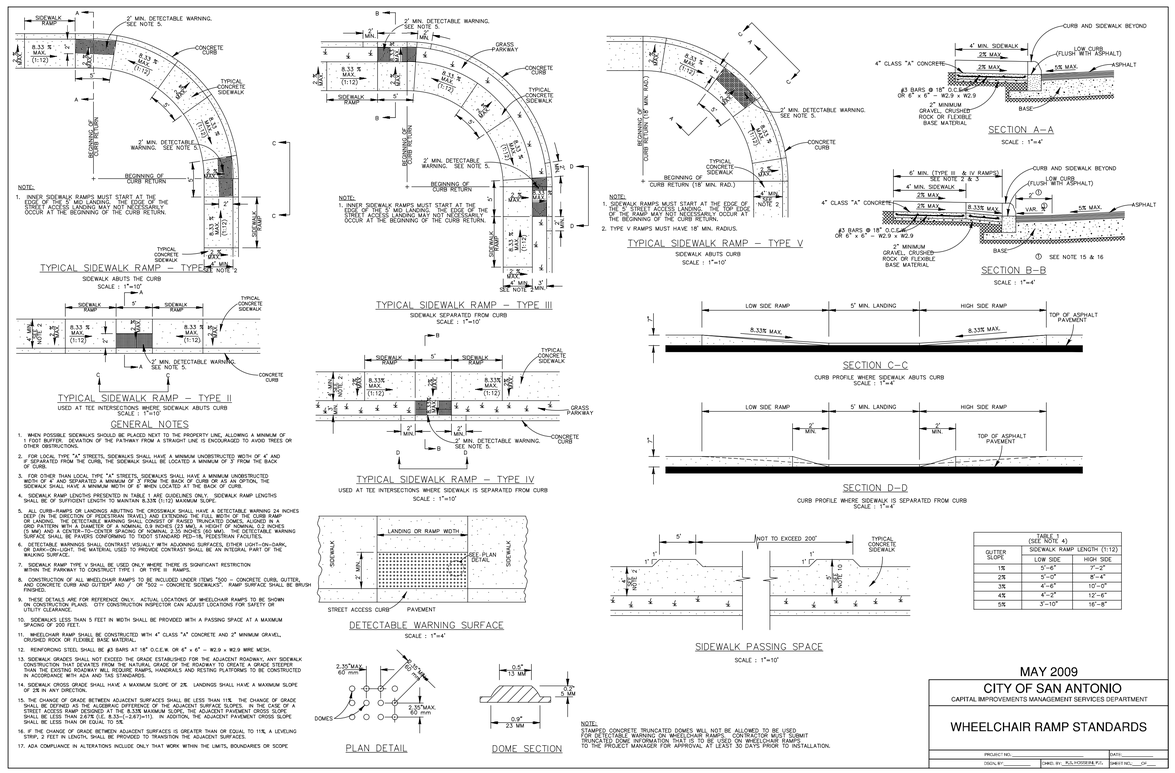

TABLE (SEE NOTE 4)		
GUTTER SLOPE	SIDEWALK RAMP LENGTH (1:12)	
	LOW SIDE	HIGH SIDE
1%	5'–6"	7'–2"
2%	5'–0"	8'–4"
3%	4'–6"	10'–0"
4%	4'–2"	12'–6"
5%	3'–10"	16'–8"

MAY 2009

CITY OF SAN ANTONIO
CAPITAL IMPROVEMENTS MANAGEMENT SERVICES DEPARTMENT

WHEELCHAIR RAMP STANDARDS

SPANISH TRAILS-UNIT 2 EAST
SAN ANTONIO, TEXAS
STREET DETAILS

PLAT NO.	22-11800121
JOB NO.	12044-05
DATE	APRIL 2024
DESIGNER	AC
CHECKED	DRAWN AC
SHEET	C2.10

Date: Apr 16, 2024, 3:27pm User ID: gkilbebrew
File: P:\120\44\05\Design\Civil\STD\1204405.dwg

THIS DOCUMENT HAS BEEN PRODUCED FROM MATERIAL THAT WAS STORED AND/OR TRANSMITTED ELECTRONICALLY AND MAY HAVE BEEN INADVERTENTLY ALTERED. RELY ONLY ON FINAL HARDCOPY MATERIALS BEARING THE CONSULTANT'S ORIGINAL SIGNATURE AND SEAL. AERIAL IMAGERY PROVIDED BY GOOGLE© UNLESS OTHERWISE NOTED. Imagery © 2016,CAPCOG,Digital Globe,Texas Orthoimagery Program, USDA Farm Service Agency.

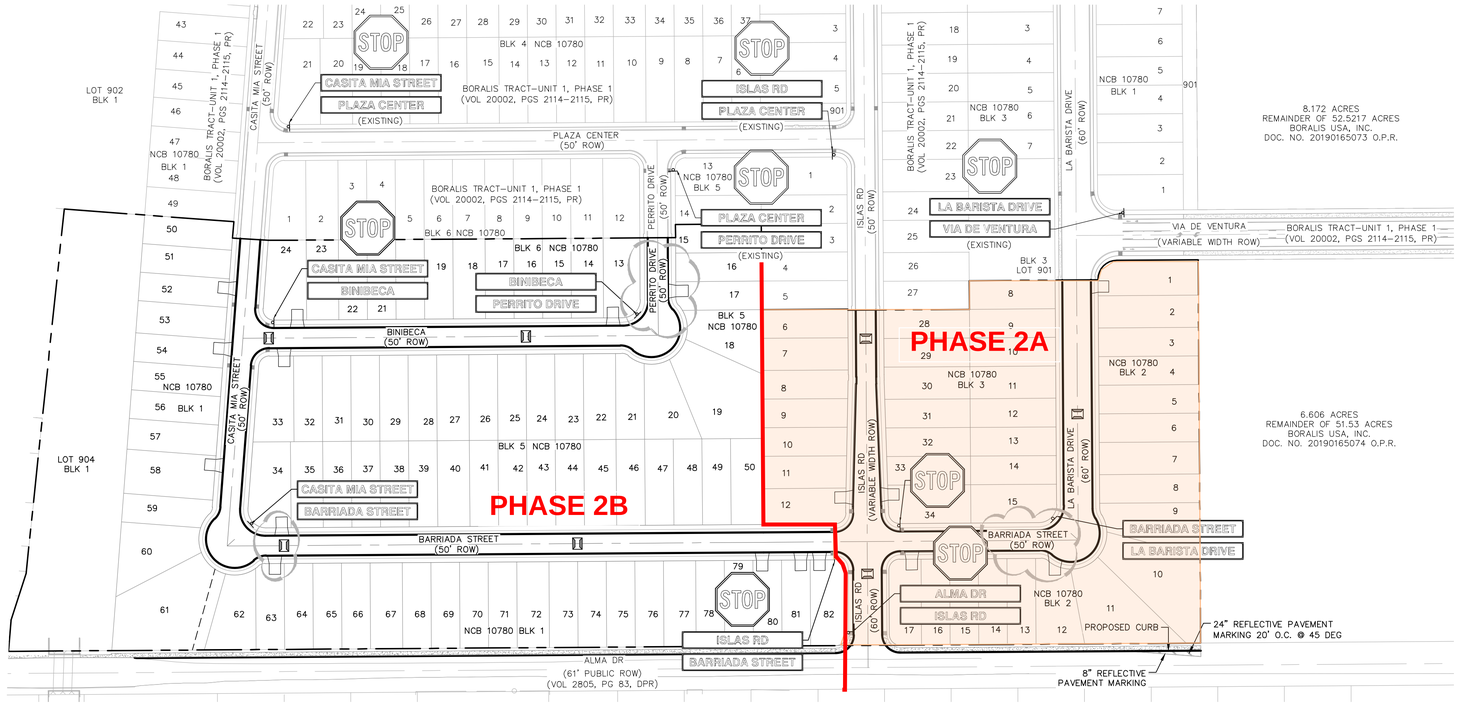

LOCATION MAP

NOT-TO-SCALE

SCALE: 1"= 100'

0' 100' 200' 300'

SYMBOL		ITEM NUMBER
	UNIT BOUNDARY	
	PROPOSED DRIVEWAY	
	SIDEWALK (HOMEBUILDER RESPONSIBILITY)	
	SIDEWALK (SITEWORK CONTRACTOR RESPONSIBILITY)	
	TYPE II BLUE RAISED PAVEMENT MARKERS – NO SEPARATE PAY ITEM (N.T.S.)	
Street Name	STREET SIGN	531.57
STOP	R1-1 30"X30"	531.3

DRIVEWAY NOTE:

DRIVEWAYS SHOWN ON THIS PLAN ARE FOR THE SOLE PURPOSE OF INDICATING A POTENTIAL CONFLICT WITH CURB RAMP, DRAINAGE INFRASTRUCTURE, OR OTHER CONFLICT. DRIVEWAY LOCATION IS SUBJECT TO CHANGE BASED ON HOME SELECTION AND FINAL LOT DESIGN.

NO.	REVISION	DATE
1	REMOVED RAMPS	03/26/2024

3/26/2024

STATE OF TEXAS
REBECCA ANN CARROLL
92666
LICENSED
PROFESSIONAL ENGINEER

PAPE-DAWSON ENGINEERS
SAN ANTONIO I AUSTIN I HOUSTON I FORT WORTH I DALLAS
2000 NW LOOP 410 I SAN ANTONIO, TX 78213 I 210.375.9000
TEXAS ENGINEERING FIRM #470 I TEXAS SURVEYING FIRM #10028800

SPANISH TRAILS-UNIT 2 EAST

SAN ANTONIO, TEXAS

OVERALL SIGNAGE PLAN

PLAT NO. 22-11800121
JOB NO. 12044-05
DATE MARCH 2024
DESIGNER AC
CHECKED ____ DRAWN AC
SHEET C3.00

Date: Mar 26, 2024, 4:37pm User ID: gkilebrew
File: P:\120\44\05\Design\Civil\SG120440S.dwg

DISCLAIMER: The use of this standard is governed by the "Texas Engineering Practice Act". No warranty of any kind is made by TxDOT for any purpose whatsoever. TxDOT assumes no responsibility for the conversion of this standard to other formats or for incorrect results or damages resulting from its use.

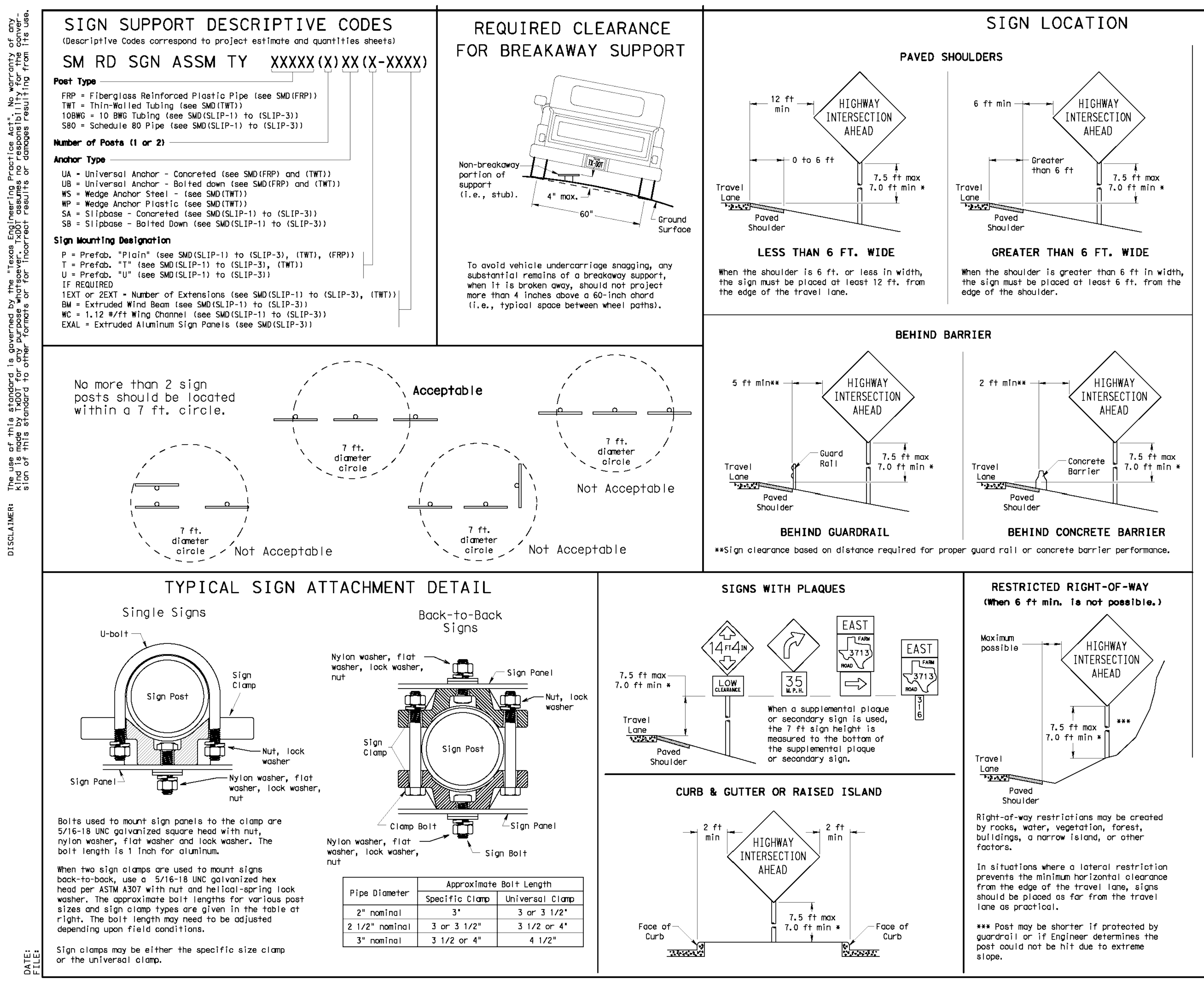

- Signs shall be mounted using the following condition that results in the greatest sign elevation:
  (1) a minimum of 7 to a maximum of 7.5 feet above the edge of the travel lane or
  (2) a minimum of 7 to a maximum of 7.5 feet above the grade at the base of the support when sign is installed on the backslope.

The maximum values may be increased when directed by the Engineer.

See the Traffic Operations Division website for detailed drawings of sign clamps, Triangular Slipbase System components and Wedge Anchor System components.

The website address is:
http://www.txdot.gov/publications/traffic.htm

Texas Department of Transportation
Traffic Operations Division

SIGN MOUNTING DETAILS SMALL ROADSIDE SIGNS GENERAL NOTES & DETAILS

SMD(GEN)-08

© TxDOT July 2002

TRIANGULAR SLIPBASE INSTALLATION GENERAL REQUIREMENTS

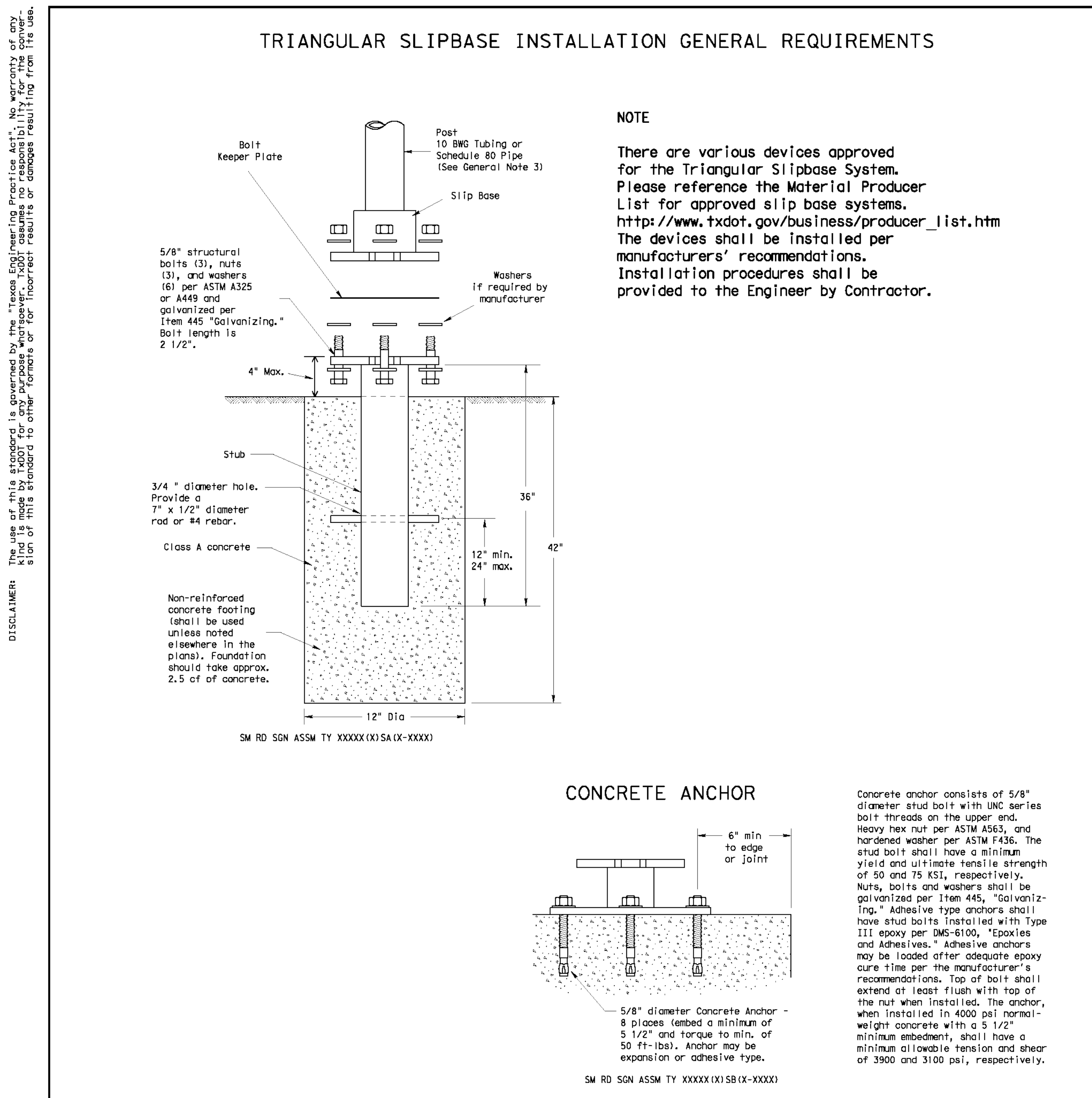

NOTE

There are various devices approved for the Triangular Slipbase System. Please reference the Material Producer List for approved slip base systems. http://www.txdot.gov/business/producer_list.htm The devices shall be installed per manufacturers' recommendations. Installation procedures shall be provided to the Engineer by Contractor.

GENERAL NOTES:

1. Slip base shall be permanently marked to indicate manufacturer. Method, design, and location of marking are subject to approval of the TxDOT Traffic Standards Engineer.
2. Material used as post with this system shall conform to the following specifications:
   10 BWG Tubing (2.875" outside diameter)
   0.134" nominal wall thickness
   Seamless or electric-resistance welded steel tubing or pipe
   Steel shall be HSLAS Gr 55 per ASTM A1011 or ASTM A1008
   Other steels may be used if they meet the following:
   55,000 PSI minimum yield strength
   70,000 PSI minimum tensile strength
   20% minimum elongation in 2"
   Wall thickness (uncoated) shall be within the range of 0.122" to 0.138"
   Outside diameter (uncoated) shall be within the range of 2.867" to 2.883"
   Galvanization per ASTM A123 or ASTM A653 G210. For precoated steel tubing (ASTM A653), recoat tube outside diameter weld seam by metallizing with zinc wire per ASTM B833.
   Schedule 80 Pipe (2.875" outside diameter)
   0.276" nominal wall thickness
   Steel tubing per ASTM A500 Gr C
   Other seamless or electric-resistance welded steel tubing or pipe with equivalent outside diameter and wall thickness may be used if they meet the following:
   46,000 PSI minimum yield strength
   62,000 PSI minimum tensile strength
   21% minimum elongation in 2"
   Wall thickness (uncoated) shall be within the range of 0.248" to 0.304"
   Outside diameter (uncoated) shall be within the range of 2.855" to 2.895"
   Galvanization per ASTM A123
3. See the Traffic Operations Division website for detailed drawings of sign clamps and Texas Universal Triangular Slipbase System components. The website address is:
   http://www.txdot.gov/publications/traffic.htm
4. Sign supports shall not be spliced except where shown. Sign support posts shall not be spliced.

ASSEMBLY PROCEDURE

Foundation
1. Prepare 12-inch diameter by 42-inch deep hole. If solid rock is encountered, the depth of the foundation may be reduced such that it is embedded a minimum of 18 inches into the solid rock.
2. The Engineer may permit batches of concrete less than 2 cubic yards to be mixed with a portable, motor-driven concrete mixer. For small placements less than 0.5 cubic yards, hand mixing in a suitable container may be allowed by Engineer. Concrete shall be Class A.
3. Push the pipe end of the slip base stub into the center of the concrete. Rotate the stub back and forth while pushing it down into the concrete to assure good contact between the concrete and stub. Continue to work the stub into the concrete until it is between 2 to 4 inches above the ground.
4. Plumb the stub. Allow a minimum of 4 days to set, unless otherwise directed by the Engineer.
5. The triangular slipbase system is multidirectional and is designed to release when struck from any direction.

Support
1. Cut support so that the bottom of the sign will be 7 to 7.5 feet above the edge of the travelway (i.e., edge of the closest lane) when slip plate is below the edge of pavement or 7 to 7.5 feet above slip plate when the slip plate is above the edge of the travelway. The cut shall be plumb and straight.
2. Attach sign to support using connections shown. When multiple signs are installed on the same support, ensure the minimum clearance between each sign is maintained. See SMD(SLIP-2) for clearances based on sign types.

CONCRETE ANCHOR

Concrete anchor consists of 5/8" diameter stud bolt with UNC series bolt threads on the upper end. Heavy hex nut per ASTM A563, and hardened washer per ASTM F436. The stud bolt shall have a minimum yield and ultimate tensile strength of 50 and 75 KSI, respectively. Nuts, bolts and washers shall be galvanized per Item 445, "Galvanizing." Adhesive type anchors shall have stud bolts installed with Type III epoxy per DMS-6100, "Epoxies and Adhesives." Adhesive anchors may be loaded after adequate epoxy cure time per the manufacturer's recommendations. Top of bolt shall extend at least flush with top of the nut when installed. The anchor, when installed in 4000 psi normal-weight concrete with a 5 1/2" minimum embedment, shall have a minimum allowable tension and shear of 3900 and 3100 psi, respectively.

Texas Department of Transportation
Traffic Operations Division

SIGN MOUNTING DETAILS SMALL ROADSIDE SIGNS TRIANGULAR SLIPBASE SYSTEM

SMD(SLIP-1)-08

© TxDOT July 2002

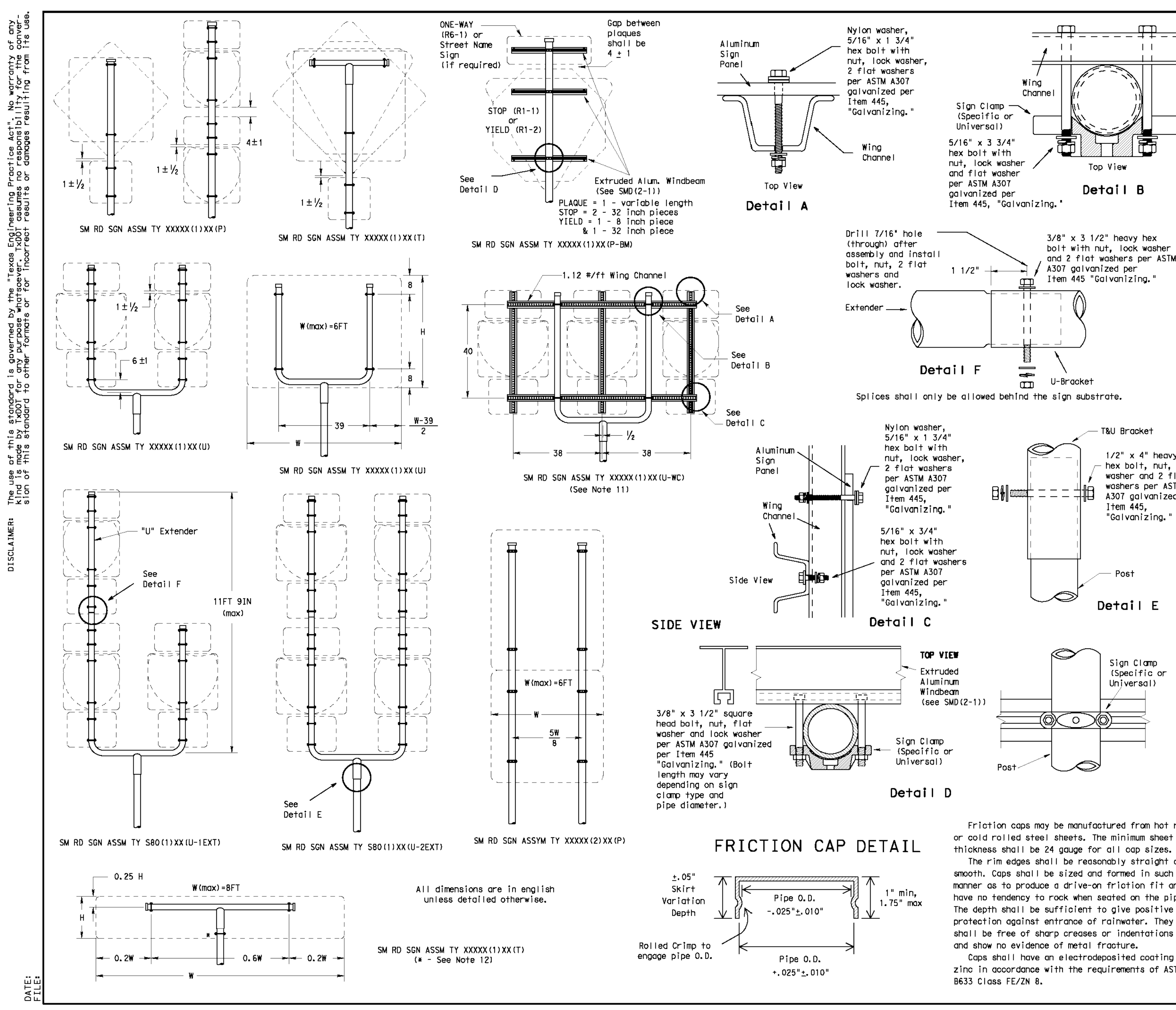

FRICTION CAP DETAIL

Friction caps may be manufactured from hot rolled or cold rolled steel sheets. The minimum sheet metal thickness shall be 24 gauge for all cap sizes. The rim edges shall be reasonably straight and smooth. Caps shall be sized and formed in such a manner as to produce a drive-on friction fit and have no tendency to rock when seated on the pipe. The depth shall be sufficient to give positive protection against entrance of rainwater. They shall be free of sharp creases or indentations and show no evidence of metal fracture. Caps shall have an electrodeposited coating of zinc in accordance with the requirements of ASTM B633 Class FE/ZN 8.

GENERAL NOTES:

1.

SIGN SUPPORT	# OF POSTS	MAX. SIGN AREA
10 BWG	1	16 SF
10 BWG	2	32 SF
Sch 80	1	32 SF
Sch 80	2	64 SF

2. The Engineer may require that a Schedule 80 post be used in place of a 10 BWG where a sign height is abnormally high due to a fill slope.
3. Sign supports shall not be spliced except where shown. Sign support posts shall not be spliced.
4. Aluminum sign blanks shall conform to Departmental Material Specifications DMS-7110 and shall have the following minimum thicknesses: 0.080 for signs less than 7.5 sq. ft., 0.100 for signs 7.5 to 15 sq. ft., and 0.125 for signs greater than 15 sq. ft.
5. Signs that require specific supports due to reasons in addition to windloading are indicated on the "REQUIRED SUPPORT" table on this sheet.
6. For horizontal rectangular signs fabricated from flat aluminum, T-brackets are used for signs 24 inches or less in height. U-brackets are used for signs of greater height.
7. When two triangular slipbase supports are used to support a single sign, they shall not be "rigidly" connected to each other except through the sign panel. This will allow each support to act independently when impacted by an errant vehicle.
8. Wing channel shall meet ASTM A 1011 SS Gr 50 and be galvanized per ASTM A 123.
9. Excess pipe, wing channel, or windbeam shall be cut off so that it does not extend beyond the sign panel (i.e., excess support shall not be visible when the sign is viewed from the front.) Repair galvanized coating at cut support ends per Item 445, "Galvanizing."
10. Additional route markers may be added vertically, provided the total sign area does not exceed the maximum allowable amount per Note 1.
11. Additional sign clamp required on the "T-bracket" post for 24 inch height signs. Place the clamp 3 inches above bottom of sign when possible.
12. Post open ends shall be fitted with Friction Caps.
13. Sign blanks shall be the sizes and shapes shown on the plans.

REQUIRED SUPPORT

	SIGN DESCRIPTION	SUPPORT
Regulatory	48-inch STOP sign (R1-1)	TY 10BWG(1)XX(T) TY 10BWG(1)XX(P-BM)
Regulatory	60-inch YIELD sign (R1-2)	TY 10BWG(1)XX(T) TY 10BWG(1)XX(P-BM)
Regulatory	48x16-inch ONE-WAY sign (R6-1)	TY 10BWG(1)XX(T) TY 10BWG(1)XX(P-BM)
Regulatory	36x48, 48x36, and 48x48-inch signs	TY 10BWG(1)XX(T)
Regulatory	48x60-inch signs	TY S80(1)XX(T)
Warning	48x48-inch signs (diamond or square)	TY 10BWG(1)XX(T)
Warning	48x60-inch signs	TY S80(1)XX(T)
Warning	48-inch Advance School X-ing sign (S1-1)	TY 10BWG(1)XX(T)
Warning	48-inch School X-ing sign (S2-1)	TY 10BWG(1)XX(T)
Warning	Large Arrow sign (W1-6 & W1-7)	TY 10BWG(1)XX(T)

Texas Department of Transportation
Traffic Operations Division

SIGN MOUNTING DETAILS SMALL ROADSIDE SIGNS TRIANGULAR SLIPBASE SYSTEM

SMD(SLIP-2)-08

© TxDOT July 2002

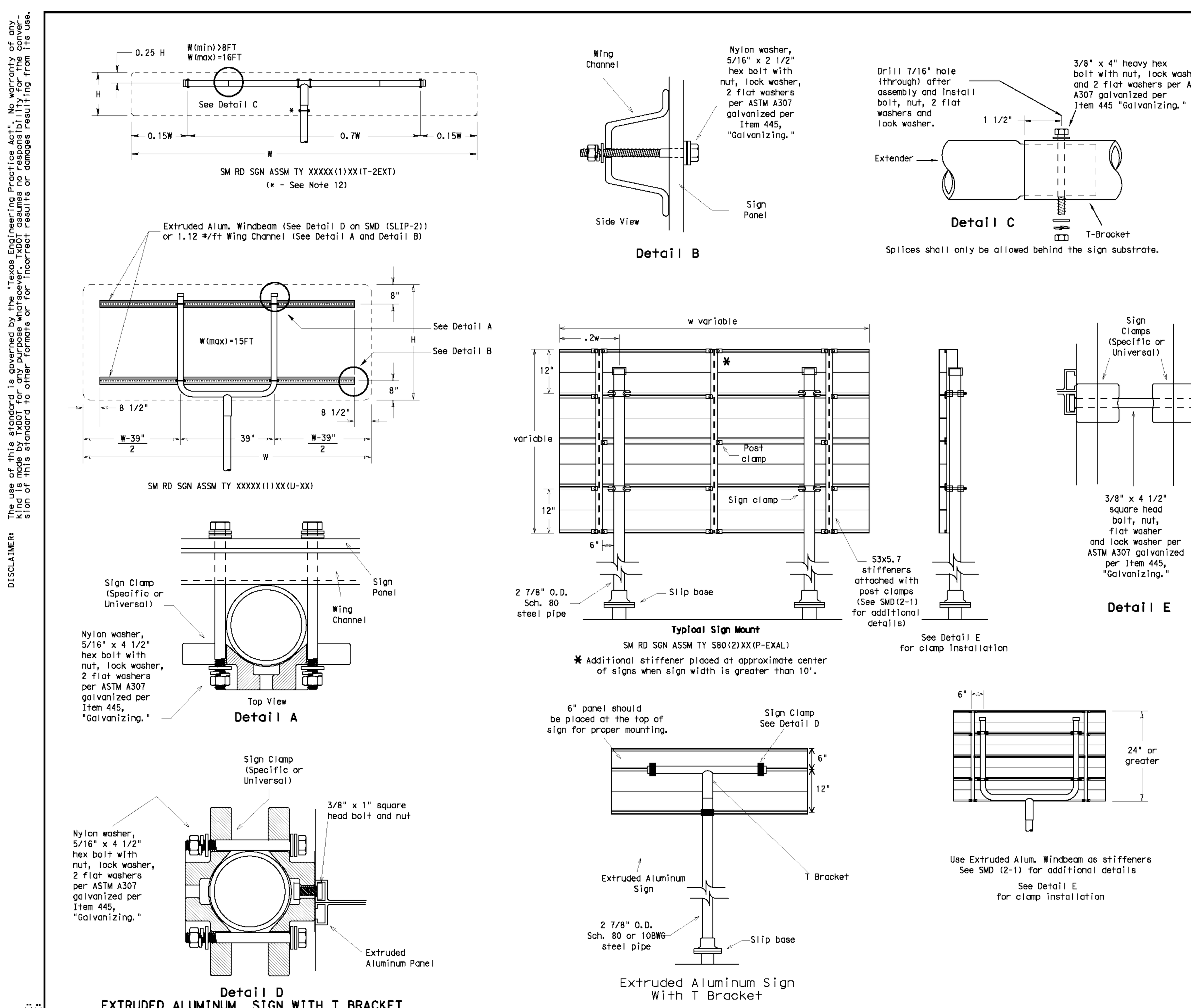

GENERAL NOTES:

1.

SIGN SUPPORT	# OF POSTS	MAX. SIGN AREA
10 BWG	1	16 SF
10 BWG	2	32 SF
Sch 80	1	32 SF
Sch 80	2	64 SF

2. The Engineer may require that a Schedule 80 post be used in place of a 10 BWG where a sign height is abnormally high due to a fill slope.
3. Sign supports shall not be spliced except where shown. Sign support posts shall not be spliced.
4. Aluminum sign blanks shall conform to Departmental Material Specifications DMS-7110 and shall have the following minimum thicknesses: 0.080 for signs less than 7.5 sq. ft., 0.100 for signs 7.5 to 15 sq. ft., and 0.125 for signs greater than 15 sq. ft.
5. Signs that require specific supports due to reasons in addition to windloading are indicated on the "REQUIRED SUPPORT" table on this sheet.
6. For horizontal rectangular signs fabricated from flat aluminum, T-brackets are used for signs 24 inches or less in height. U-brackets are used for signs of greater height.
7. When two triangular slipbase supports are used to support a single sign, they shall not be "rigidly" connected to each other except through the sign panel. This will allow each support to act independently when impacted by an errant vehicle.
8. Wing channel shall meet ASTM A 1011 SS Gr 50 and be galvanized per ASTM A 123.
9. Excess pipe, wing channel, or windbeam shall be cut off so that it does not extend beyond the sign panel (i.e., excess support shall not be visible when the sign is viewed from the front.) Repair galvanized coating at cut support ends per Item 445, "Galvanizing."
10. Additional route markers may be added vertically, provided the total sign area does not exceed the maximum allowable amount per Note 1.
11. Additional sign clamp required on the "T-bracket" post for 24 inch height signs. Place the clamp 3 inches above bottom of sign when possible.
12. Post open ends shall be fitted with Friction Caps.

REQUIRED SUPPORT

	SIGN DESCRIPTION	SUPPORT
Regulatory	48-inch STOP sign (R1-1)	TY 10BWG(1)XX(T) TY 10BWG(1)XX(P-BM)
Regulatory	60-inch YIELD sign (R1-2)	TY 10BWG(1)XX(T) TY 10BWG(1)XX(P-BM)
Regulatory	48x16-inch ONE-WAY sign (R6-1)	TY 10BWG(1)XX(T) TY 10BWG(1)XX(P-BM)
Regulatory	36x48, 48x36, and 48x48-inch signs	TY 10BWG(1)XX(T)
Regulatory	48x60-inch signs	TY S80(1)XX(T)
Warning	48x48-inch signs (diamond or square)	TY 10BWG(1)XX(T)
Warning	48x60-inch signs	TY S80(1)XX(T)
Warning	48-inch Advance School X-ing sign (S1-1)	TY 10BWG(1)XX(T)
Warning	48-inch School X-ing sign (S2-1)	TY 10BWG(1)XX(T)
Warning	Large Arrow sign (W1-6 & W1-7)	TY 10BWG(1)XX(T)

Texas Department of Transportation
Traffic Operations Division

SIGN MOUNTING DETAILS SMALL ROADSIDE SIGNS TRIANGULAR SLIPBASE SYSTEM

SMD(SLIP-3)-08

© TxDOT July 2002

NO.	REVISION	DATE

12/4/2023

STATE OF TEXAS
REBECCA ANN CARROLL
92666
LICENSED
PROFESSIONAL ENGINEER

PAPE-DAWSON ENGINEERS
SAN ANTONIO | AUSTIN | HOUSTON | FORT WORTH | DALLAS
2000 NW LOOP 410 | SAN ANTONIO, TX 78213 | 210.375.9000
TEXAS ENGINEERING FIRM #470 | TEXAS SURVEYING FIRM #10028800

SPANISH TRAILS-UNIT 2 EAST
SAN ANTONIO, TEXAS

SIGNAGE DETAILS SHEET 1 OF 2

PLAT NO. 22-11800121
JOB NO. 12044-05
DATE DECEMBER 2023
DESIGNER AC
CHECKED ___ DRAWN AC
SHEET C3.10

Date: Dec 04, 2023, 9:59am User ID: gkillebrew
File: P:\120\44\05\Design\Civil\SG0T1204405.dwg

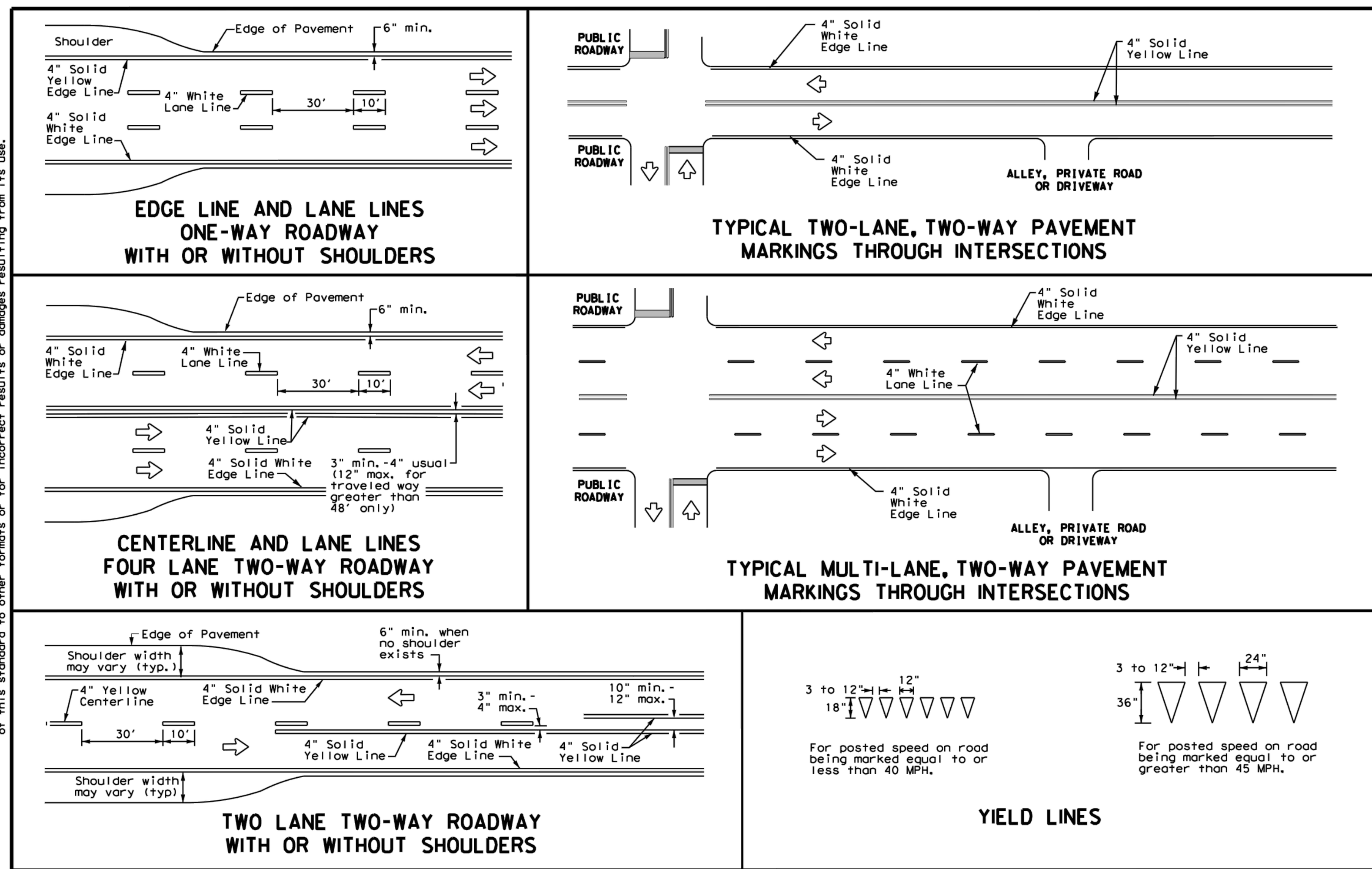

GENERAL NOTES

1. Edgeline striping shall be as shown in the plans or as directed by the Engineer. The edgeline should not be placed less less than 6 inches from the edge of pavement. This distance may vary due to pavement raveling or other conditions. Edgelines are not required in curb and gutter sections of roadways.
2. The traveled way includes only that portion of the roadway used for vehicular travel. It does not include the parking lanes, sidewalks, berms and shoulders. The traveled ways shall be measured from the inside of edgeline to the inside of edgeline of a two lane roadway.

MATERIAL SPECIFICATIONS	
PAVEMENT MARKERS (REFLECTORIZED)	DMS-4200
EPOXY AND ADHESIVES	DMS-6100
BITUMINOUS ADHESIVE FOR PAVEMENT MARKERS	DMS-6130
TRAFFIC PAINT	DMS-8200
HOT APPLIED THERMOPLASTIC	DMS-8220
PERMANENT PREFABRICATED PAVEMENT MARKINGS	DMS-8240

All pavement marking materials shall meet the required Departmental Material Specifications as specified by the plans.

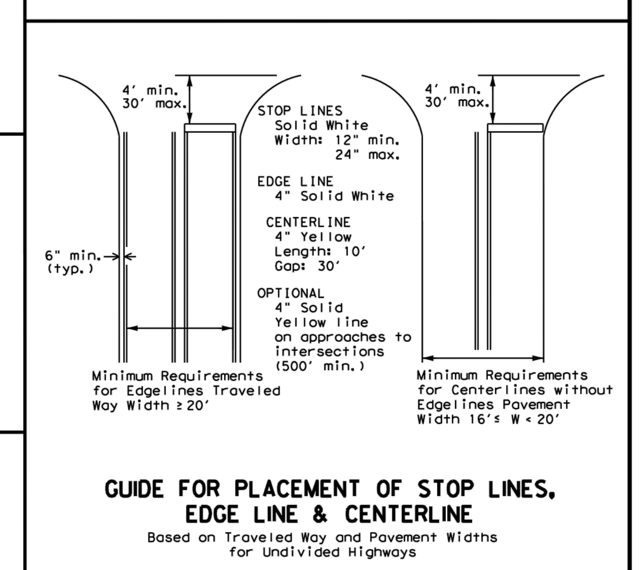

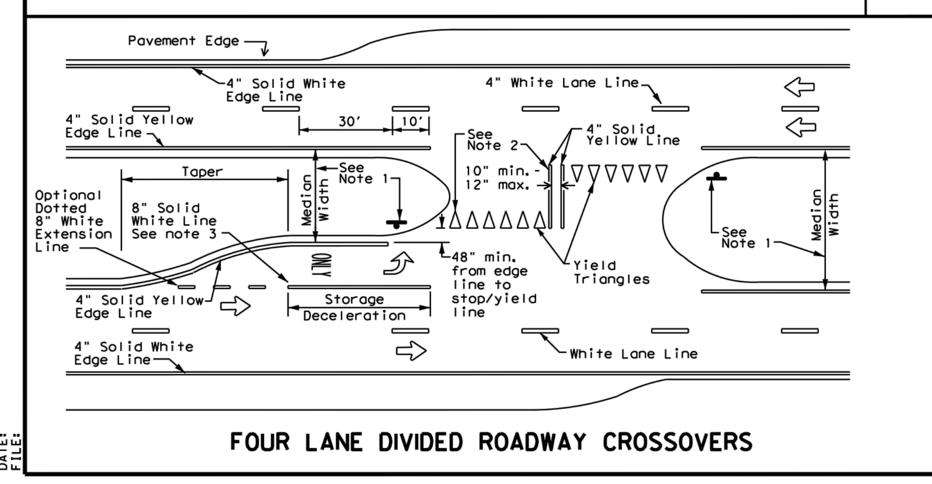

NOTES

1. Where divided highways are separated by median widths at the median opening itself of 30 feet or more, median openings shall be signed as two separate intersections. Each median opening has two width measurements, with one measurement for each approach. The narrow median width will be the controlling width to determine if signs are required. Yield signs are the typical intersection control. Stop signs are optional as determined by the Engineer.
2. Install median striping (double yellow centerlines and stop bars/yield triangles) when a 50' or greater median centerline can be placed. Stop bars shall only be used with stop signs. Yield traingles shall only be used with yield signs.
3. Length of turn bays, including taper, deceleration, and storage lengths shall be as shown on the plans or as directed by the Engineer.

Texas Department of Transportation — Traffic Safety Division Standard

TYPICAL STANDARD PAVEMENT MARKINGS

PM(1)-20

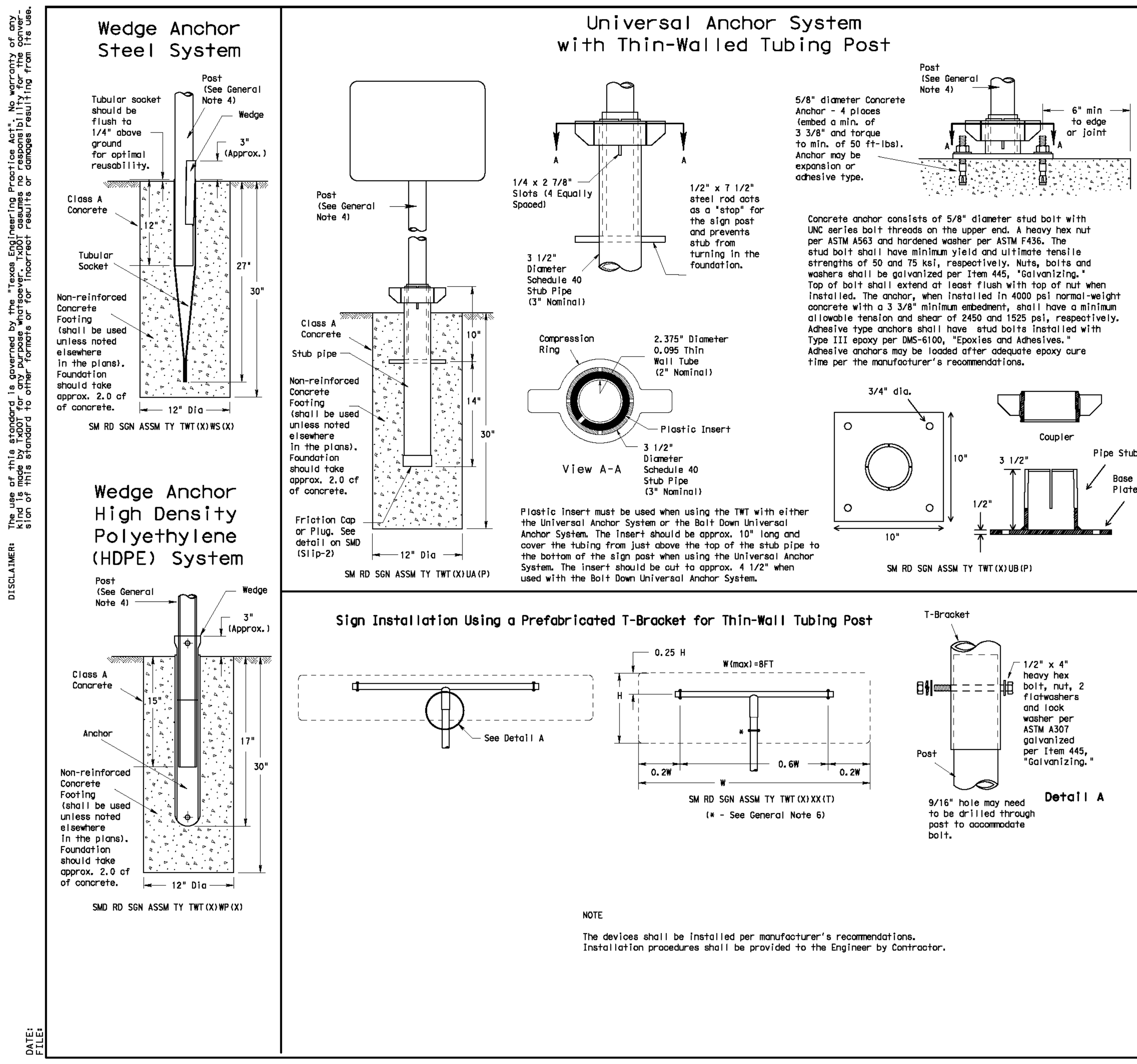

GENERAL NOTES:

1. The Wedge Anchor System and the Universal Anchor System with thin wall tubing post may be used to support up to 10 square feet of sign area.
2. The tubular socket, wedge and prefabricated T-bracket shall be permanently marked to indicate manufacturer. Method, design, and location of marking are subject to the approval of the TxDOT Traffic Standards Engineer.
3. Except for posts (13 BWG Tubing), clamps, nuts and bolts, all components shall be prequalified. A list of prequalified vendors may be obtained from the Material Producer List web page. The website address is: http://www.txdot.gov/business/producer list.htm
4. Material used as post with this system shall conform to the following specifications:
   13 BWG Tubing (2.375" outside diameter) (TWT)
   0.095" nominal wall thickness
   Seamless or electric-resistance welded steel tubing
   Steel shall be HSLAS Gr 55 per ASTM A1011 or ASTM A1008
   Other steels may be used if they meet the following:
   55,000 PSI minimum yield strength
   70,000 PSI minimum tensile strength
   18% minimum elongation in 2"
   Wall thickness (uncoated) shall be within the range of .083" to .099"
   Outside diameter (uncoated) shall be within the range of 2.369" to 2.381"
   Galvanization per ASTM 123 or ASTM A653 G210. For precoated steel tubing (ASTM A653), recoat tube outside diameter weld seam by metallizing with zinc wire per ASTM B833.
5. Sign blanks shall be the sizes and shapes shown on the plans.
6. Additional sign clamp required on the "T-bracket" post for 24" high signs. Place clamp at least 3" above bottom of sign when possible.
7. Sign supports shall not be spliced except where shown. Sign support posts shall not be spliced.
8. See the Traffic Operations Division website for detailed drawings of sign clamps and Wedge Anchor System components. The website address is: http://www.txdot.gov/publications/traffic.htm

WEDGE ANCHOR SYSTEM INSTALLATION PROCEDURE

1. Dig foundation hole. Where solid rock is encountered at ground level, the foundation shall be a minimum depth of 18". When solid rock is encountered below ground level, the foundation shall extend in the solid rock a minimum depth of 18" or provide a minimum foundation depth of 30". If solid rock is encountered, the socket/stub may be reduced in length as required to a minimum length of 18". Any material removed from the socket/stub shall be from the bottom and the clearance requirements given on SMD(GEN) must be followed. The inner surfaces of the socket/stub must remain free of concrete or other debris.
2. The Engineer may permit batches of concrete less than 2 cubic yards to be mixed with a portable, motor driven concrete mixer. For small placements less than 0.5 cubic yards, hand mixing in a suitable container may be allowed by Engineer. Place concrete into hole until it is approximately flush with the ground. Concrete shall be Class A.
3. Insert tubular socket into concrete until top of socket is approximaely 1/4 " above the concrete footing.
4. Plumb the socket. Allow a minimum 4 days for concrete to set, unless otherwise directed by Engineer..
5. Attach the sign to the sign post.
6. Insert the sign post into socket and align sign face with roadway.
7. Drive the wedge into the socket to secure post. This will leave approximately 3 inches of the wedge exposed.

UNIVERSAL ANCHOR SYSTEM INSTALLATION PROCEDURE

1. Dig foundation hole. Where solid rock is encountered at ground level, the foundation shall be a minimum depth of 18". When solid rock is encountered below ground level, the foundation shall extend in the solid rock a minimum depth of 18" or provide a minimum foundation depth of 30". If solid rock is encountered, the socket/stub may be reduced in length as required to a minimum length of 18". Any material removed from the socket/stub shall be from the bottom and the clearance requirements given on SMD(GEN) must be followed. The inner surfaces of the socket/stub must remain free of concrete or other debris.
2. Insert base post in hole to depths shown and backfill hole with concrete.
3. Level and plumb the base post using a torpedo level and allow concrete adequate time to set. The bottom of the slots provided in the stub pipe shall remain above the top of the concrete foundation.
4. Attach the sign to the sign post.
5. Install plastic insert around bottom of post.
6. Insert sign post into base post. Lower until the post comes to rest on steel rod.
7. Seat compression ring using a hammer. Typically, the top of compression ring will be approximately level with top of stub post when optimally installed.
8. Check sign post by hand to ensure it is unable to turn. If loose, increase the tightening of the compression ring.

Texas Department of Transportation — Traffic Operations Division

SIGN MOUNTING DETAILS
SMALL ROADSIDE SIGNS
WEDGE & UNIVERSAL ANCHOR
WITH THIN WALL TUBING POST

SMD(TWT)-08

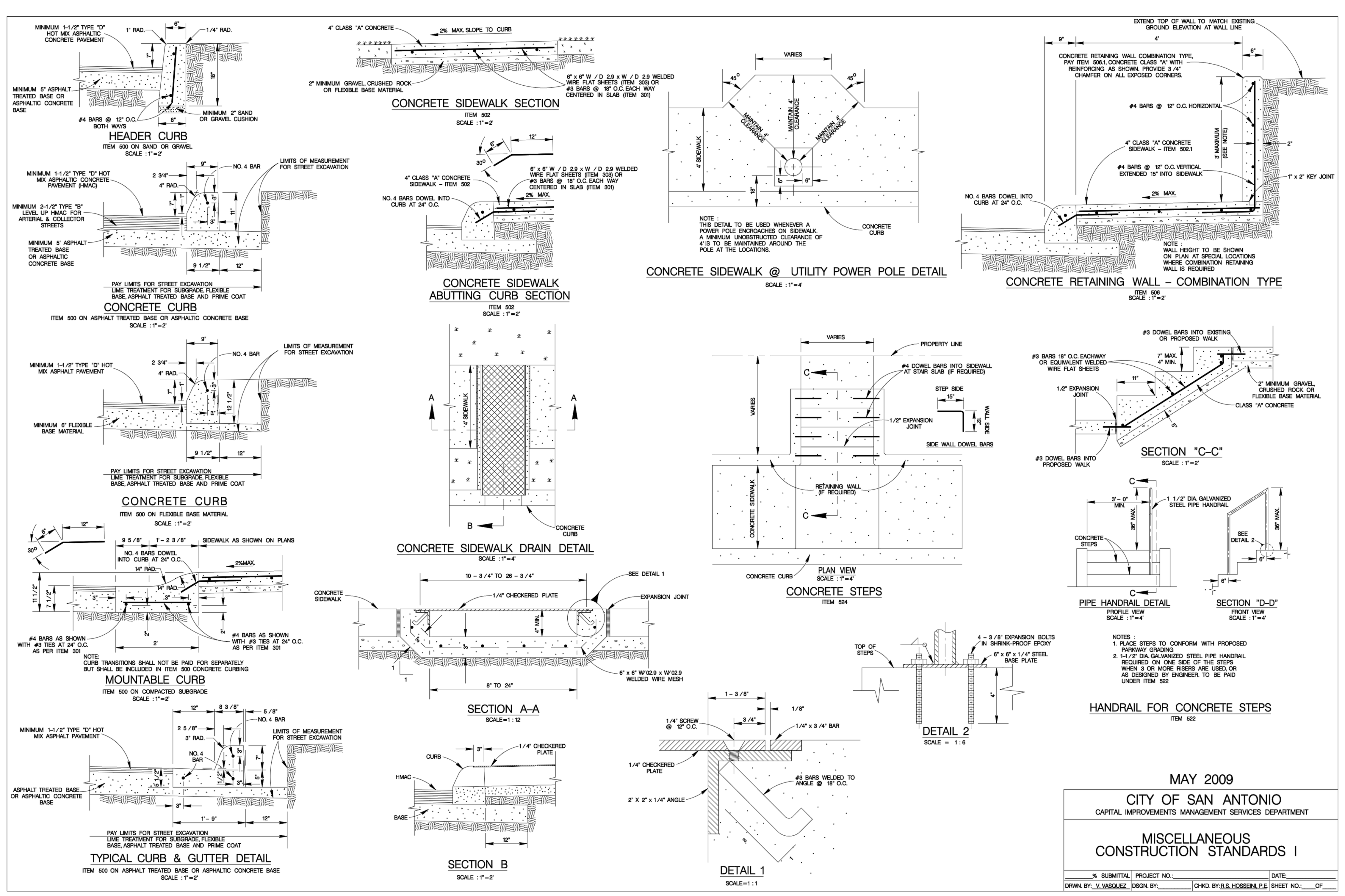

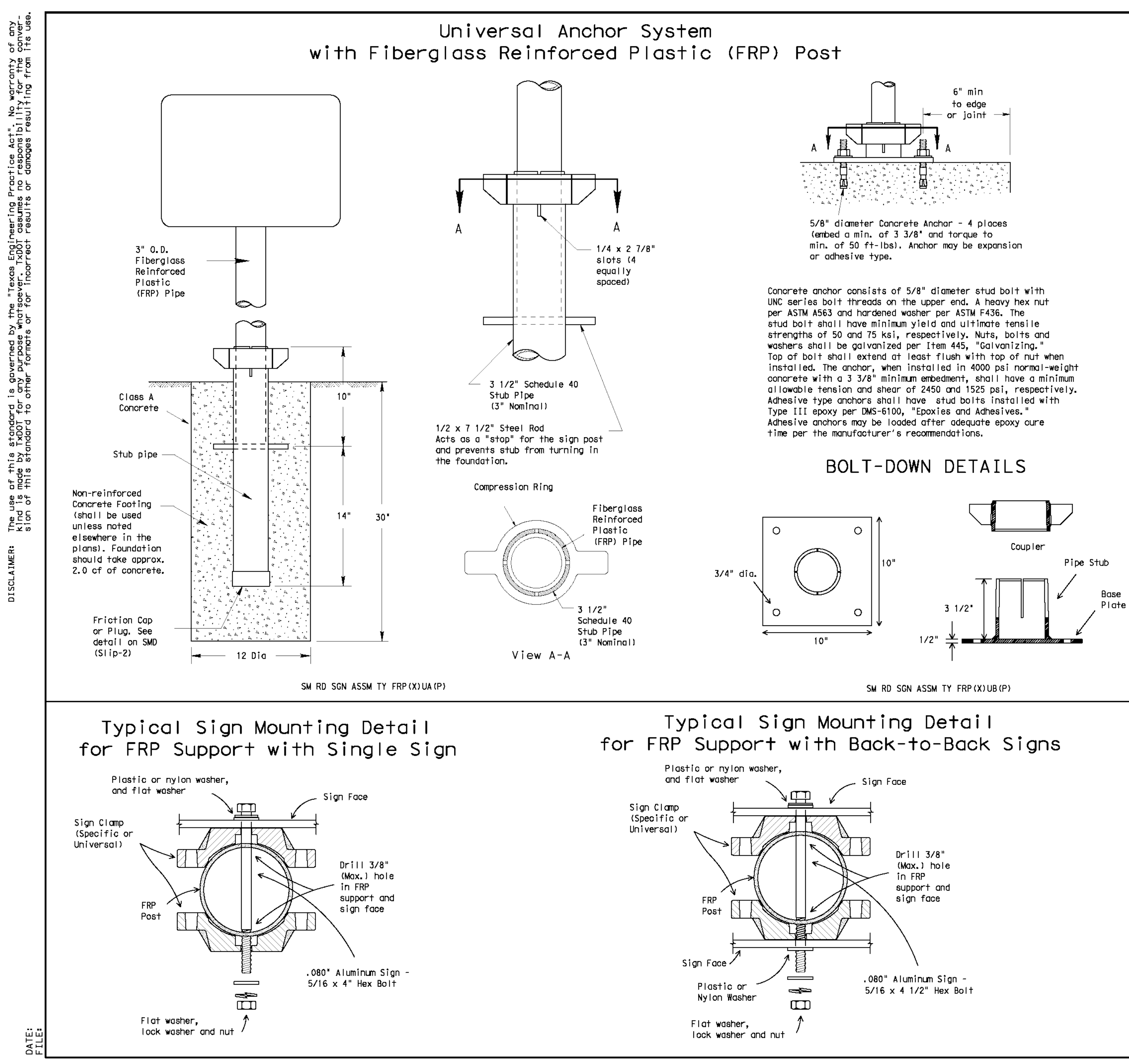

GENERAL NOTES:

1. FRP sign supports for a single type sign support may be used for signs up to and including 16 square feet. Dual post installation may be used for signs up to and including 32 square feet.
2. All nuts, bolts and washers shall be galvanized per Item 445, "Galvanizing."
3. See the Traffic Operations Division website for detailed drawings of sign clamps. The website address is: http://www.txdot.gov/publications/traffic.htm

FRP POST REQUIREMENTS

1. Materials shall conform to the requirements of Departmental Material Specification DMS-4410 and will be furnished in a yellow or gray color as specified elsewhere in the plans.
2. Thickness of FRP sign support is 0.125" + 0.031", - 0.0".
3. FRP sign supports are prequalified by the Traffic Operations Division. Prequalification procedures are obtained by writing:
   Texas Department of Transportation
   Traffic Operations Division
   125 East 11th Street
   Austin, Texas 78701-2483

UNIVERSAL ANCHOR SYSTEM INSTALLATION PROCEDURES

1. Dig foundation hole. Where solid rock is encountered at ground level, the foundation shall be a minimum depth of 18". When solid rock is encountered below ground level, the foundation shall extend in the solid rock a minimum depth of 18" or provide a minimum foundation depth of 30". If solid rock is encountered, the socket/stub may be reduced in length as required to a minimum length of 18". Any material removed from the socket/stub shall be from the bottom and the clearance requirements given on SMD(GEN) must be followed. The inner surfaces of the socket/stub must remain free of concrete or other debris.
2. The Engineer may permit batches of concrete less than 2 cubic yards to be mixed with a portable, motor driven concrete mixer. For small placements less than 0.5 cubic yards, hand mixing in a suitable container may be allowed by Engineer. Concrete shall be Class A.
3. Insert base post in foundation hole to depths shown and fill hole with concrete. Cut base post from bottom and ensure a minimum of 18" embedment if installed in solid rock.
4. Level and plumb the base post with coupler using a torpedo level and let concrete set a minimum of 4 days, unless otherwise directed by Engineer. Bottom of base post slots shall be above the concrete footing.
5. Attach sign to FRP post.
6. Insert sign post into base post. Lower until the post comes to rest on the steel rod.
7. Use hammer to ensure the coupler is firmly seated. Top of coupler should be level with top of base post in most instances.
8. Check sign to ensure there is no twist. If loose, increase the tightening of coupler.

BOLT DOWN SIGN SUPPORT

1. Position base plate with coupler on existing concrete.
2. Drill holes into concrete and insert the 5/8" diameter bolts with wedge anchors, and tighten nuts.
3. Attach sign to FRP post.
4. Insert bottom of sign post into pipe stub.
5. Use hammer to ensure the coupler is firmly seated. Top of coupler should be level with top of base post in most instances.
6. Check sign to ensure there is no twist. If loose, increase the tightening of coupler.

Texas Department of Transportation — Traffic Operations Division

SIGN MOUNTING DETAILS
SMALL ROADSIDE SIGNS
UNIVERSAL ANCHOR SYSTEM
WITH FRP POST

SMD(FRP)-08

NO.	REVISION	DATE
1.	ADDED DETAIL	04/02/2024

STATE OF TEXAS — REBECCA ANN CARROLL — 92666 — LICENSED PROFESSIONAL ENGINEER — 4/2/2024

PAPE-DAWSON ENGINEERS
SAN ANTONIO | AUSTIN | HOUSTON | FORT WORTH | DALLAS
2000 NW LOOP 410 | SAN ANTONIO, TX 78213 | 210.375.9000
TEXAS ENGINEERING FIRM #470 | TEXAS SURVEYING FIRM #10028800

SPANISH TRAILS-UNIT 2 EAST
SAN ANTONIO, TEXAS

SIGNAGE DETAILS
SHEET 2 OF 2

PLAT NO. 22-11800121
JOB NO. 12044–05
DATE APRIL 2024
DESIGNER AC
CHECKED ____ DRAWN AC
SHEET C3.20

THIS DOCUMENT HAS BEEN PRODUCED FROM MATERIAL THAT WAS STORED AND/OR TRANSMITTED ELECTRONICALLY AND MAY HAVE BEEN INADVERTENTLY ALTERED. RELY ONLY ON FINAL HARDCOPY MATERIALS BEARING THE CONSULTANT'S ORIGINAL SIGNATURE AND SEAL. AERIAL IMAGERY PROVIDED BY GOOGLE© UNLESS OTHERWISE NOTED. Imagery © 2016,CAPCOG,Digital Globe,Texas Orthoimagery Program, USDA Farm Service Agency.

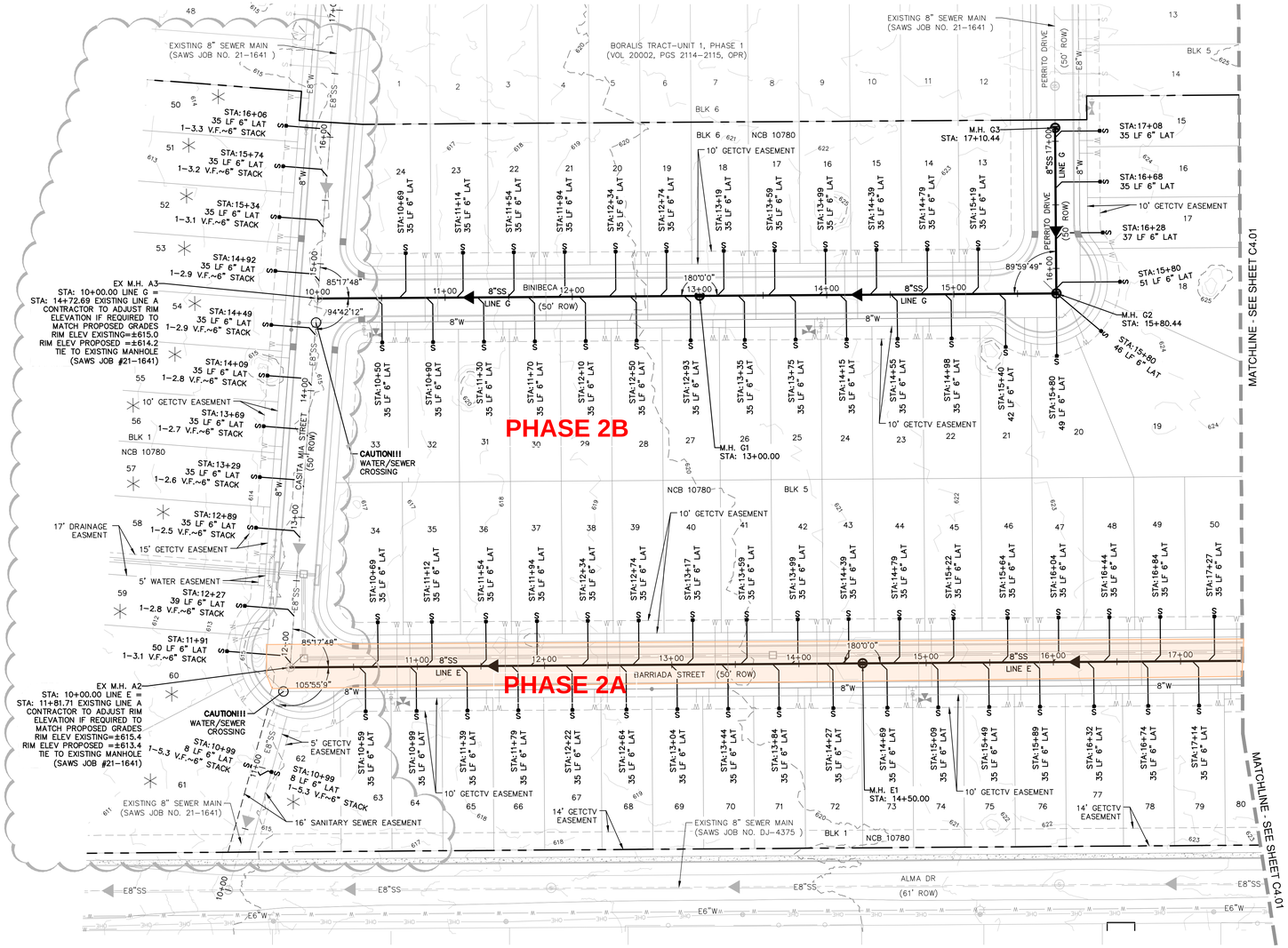

LOCATION MAP

NOT-TO-SCALE

SCALE: 1"= 100'

0' 100' 200' 300'

SEWER LEGEND

PROJECT LIMITS

EXISTING WATER

EXISTING SEWER

PROPOSED SEWER

MANHOLE

PROPOSED WATER

FIRE HYDRANT

PROPOSED SEWER LATERAL

VERTICAL STACKS ARE NEEDED FOR THESE LOTS

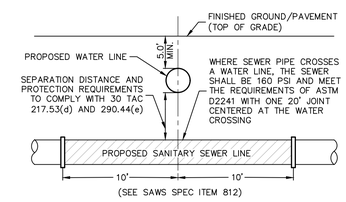

TYPICAL SANITARY SEWER/WATER CROSSING DETAIL

NOT-TO-SCALE

CAUTION!!

CONTRACTOR SHALL BE REQUIRED TO LOCATE ALL PUBLIC OR PRIVATE UTILITIES INCLUDING BUT NOT LIMITING TO: WATER, SEWER, TELEPHONE AND FIBER OPTIC LINES, SITE LIGHTING ELECTRIC, SECONDARY ELECTRIC, PRIMARY ELECTRICAL DUCTBANKS, LANDSCAPE IRRIGATION FACILITIES, AND GAS LINES. ANY UTILITY CONFLICTS THAT ARISE SHOULD BE COMMUNICATED TO THE ENGINEER IMMEDIATELY AND PRIOR TO CONSTRUCTION. THE CONTRACTOR SHALL CONTACT 1-800-DIG-TESS A MINIMUM OF 48 HOURS PRIOR TO THE START OF CONSTRUCTION. ANY DAMAGE TO EXISTING UTILITIES SHALL BE THE SOLE RESPONSIBILITY OF THE CONTRACTOR AND THE REPAIR SHALL BE AT CONTRACTOR'S SOLE EXPENSE WHETHER THE UTILITY IS SHOWN ON THESE PLANS OR NOT.

TRENCH EXCAVATION SAFETY PROTECTION:

CONTRACTOR AND/ OR CONTRACTOR'S INDEPENDENTLY RETAINED EMPLOYEE OR STRUCTURAL DESIGN/ GEOTECHNICAL/ SAFETY/EQUIPMENT CONSULTANT, IF ANY, SHALL REVIEW THESE PLANS AND ANY AVAILABLE GEOTECHNICAL INFORMATION AND THE ANTICIPATED INSTALLATION SITES WITHIN THE PROJECT WORK AREA IN ORDER TO IMPLEMENT CONTRACTOR'S TRENCH EXCAVATION SAFETY PROTECTION SYSTEMS, PROGRAMS AND /OR PROCEDURES FOR THE PROJECT DESCRIBED IN THE CONTRACT DOCUMENTS. THE CONTRACTOR'S IMPLEMENTATION OF THESE SYSTEMS, PROGRAMS AND/OR PROCEDURES SHALL PROVIDE FOR ADEQUATE TRENCH EXCAVATION SAFETY PROTECTION THAT COMPLY WITH AS A MINIMUM, OSHA STANDARDS FOR TRENCH EXCAVATIONS. SPECIFICALLY, CONTRACTOR AND/OR CONTRACTOR'S INDEPENDENTLY RETAINED EMPLOYEE OR SAFETY CONSULTANT SHALL IMPLEMENT A TRENCH SAFETY PROGRAM IN ACCORDANCE WITH OSHA STANDARDS GOVERNING THE PRESENCE AND ACTIVITIES OF INDIVIDUALS WORKING IN AND AROUND TRENCH EXCAVATION.

WASTEWATER COLLECTION LOWER
WASTEWATER TREATMENT DOS RIOS/LEON CREEK

DEVELOPER'S NAME: K.B. HOME LONE STAR, INC.
ADDRESS: 4800 FREDERICKSBURG RD
CITY: SAN ANTONIO STATE: TEXAS ZIP: 78229
PHONE# (210) 301-2886 FAX# (210) 366-2378
SAWS BLOCK MAP# 190562 TOTAL EDU'S 120 TOTAL ACREAGE 20.67
TOTAL LINEAR FOOTAGE OF PIPE: 2562 8"SS PLAT NO. 22-11800121
NUMBER OF LOTS 120 SAWS JOB NO. 22-1628

NO.	REVISION	DATE
1.	SAWS COMMENTS	9/22/2022
2.	REVISED SEWER LABELS	12/04/2023

12/4/2023

STATE OF TEXAS
REBECCA ANN CARROLL
92666
LICENSED
PROFESSIONAL ENGINEER

PAPE-DAWSON ENGINEERS
SAN ANTONIO I AUSTIN I HOUSTON I FORT WORTH I DALLAS
2000 NW LOOP 410 I SAN ANTONIO, TX 78213 I 210.375.9000
TEXAS ENGINEERING FIRM #470 I TEXAS SURVEYING FIRM #10028800

SPANISH TRAILS-UNIT 2 EAST

SAN ANTONIO, TEXAS

OVERALL SANITARY SEWER PLAN
SHEET 1 OF 2

PLAT NO. 22-11800121
JOB NO. 12044-05
DATE DECEMBER 2023
DESIGNER AC
CHECKED DRAWN AC
SHEET C4.00

Date: Dec 04, 2023, 10:28am User ID: gkilleberew
File: P:\120\44\05\Design\Civil\05120445.dwg

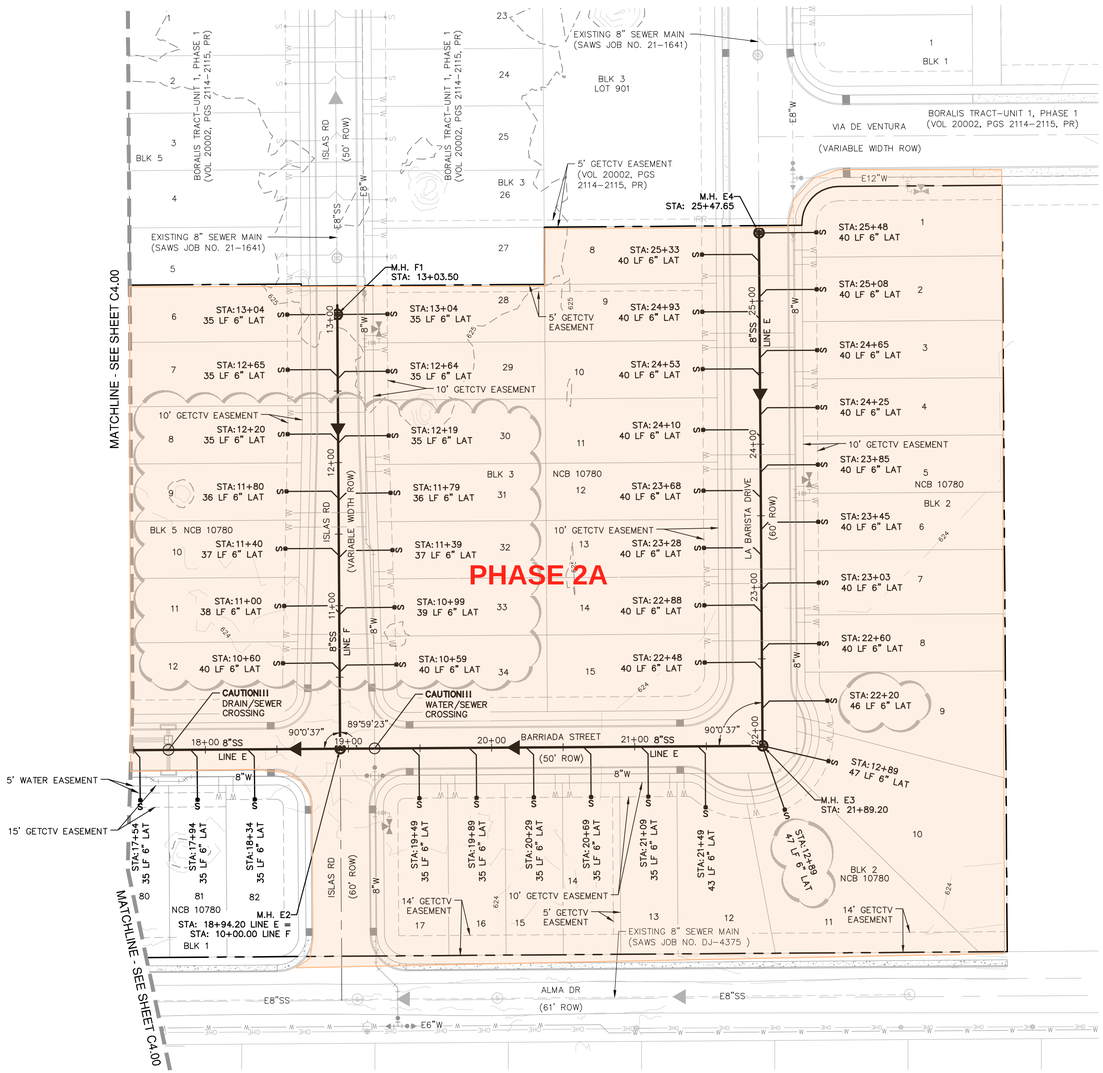

LOCATION MAP

NOT-TO-SCALE

SCALE: 1"= 50'

0' 50' 100' 150'

SEWER LEGEND

PROJECT LIMITS
EXISTING WATER
EXISTING SEWER
PROPOSED SEWER
PROPOSED WATER
PROPOSED SEWER LATERAL
VERTICAL STACKS ARE NEEDED FOR THESE LOTS

MANHOLE
FIRE HYDRANT

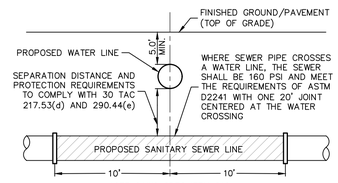

TYPICAL SANITARY SEWER/WATER CROSSING DETAIL

NOT-TO-SCALE

CAUTION!!

CONTRACTOR SHALL BE REQUIRED TO LOCATE ALL PUBLIC OR PRIVATE UTILITIES INCLUDING BUT NOT LIMITING TO: WATER, SEWER, TELEPHONE AND FIBER OPTIC LINES, SITE LIGHTING ELECTRIC, SECONDARY ELECTRIC, PRIMARY ELECTRICAL DUCTBANKS, LANDSCAPE IRRIGATION FACILITIES, AND GAS LINES. ANY UTILITY CONFLICTS THAT ARISE SHOULD BE COMMUNICATED TO THE ENGINEER IMMEDIATELY AND PRIOR TO CONSTRUCTION. THE CONTRACTOR SHALL CONTACT 1-800-DIG-TESS A MINIMUM OF 48 HOURS PRIOR TO THE START OF CONSTRUCTION. ANY DAMAGE TO EXISTING UTILITIES SHALL BE THE SOLE RESPONSIBILITY OF THE CONTRACTOR AND THE REPAIR SHALL BE AT CONTRACTOR'S SOLE EXPENSE WHETHER THE UTILITY IS SHOWN ON THESE PLANS OR NOT.

TRENCH EXCAVATION SAFETY PROTECTION:

CONTRACTOR AND/ OR CONTRACTOR'S INDEPENDENTLY RETAINED EMPLOYEE OR STRUCTURAL DESIGN/ GEOTECHNICAL/ SAFETY/EQUIPMENT CONSULTANT, IF ANY, SHALL REVIEW THESE PLANS AND ANY AVAILABLE GEOTECHNICAL INFORMATION AND THE ANTICIPATED INSTALLATION SITES WITHIN THE PROJECT WORK AREA IN ORDER TO IMPLEMENT CONTRACTOR'S TRENCH EXCAVATION SAFETY PROTECTION SYSTEMS, PROGRAMS AND /OR PROCEDURES FOR THE PROJECT DESCRIBED IN THE CONTRACT DOCUMENTS. THE CONTRACTOR'S IMPLEMENTATION OF THESE SYSTEMS, PROGRAMS AND/OR PROCEDURES SHALL PROVIDE FOR ADEQUATE TRENCH EXCAVATION SAFETY PROTECTION THAT COMPLY WITH AS A MINIMUM, OSHA STANDARDS FOR TRENCH EXCAVATIONS. SPECIFICALLY, CONTRACTOR AND/OR CONTRACTOR'S INDEPENDENTLY RETAINED EMPLOYEE OR SAFETY CONSULTANT SHALL IMPLEMENT A TRENCH SAFETY PROGRAM IN ACCORDANCE WITH OSHA STANDARDS GOVERNING THE PRESENCE AND ACTIVITIES OF INDIVIDUALS WORKING IN AND AROUND TRENCH EXCAVATION.

WASTEWATER COLLECTION LOWER
WASTEWATER TREATMENT DOS RIOS/LEON CREEK

DEVELOPER'S NAME: K.B. HOME LONE STAR, INC.
ADDRESS: 4800 FREDERICKSBURG RD
CITY: SAN ANTONIO STATE: TEXAS ZIP: 78229
PHONE# (210) 301-2886 FAX# (210) 366-2378
SAWS BLOCK MAP# 190562 TOTAL EDU'S 120 TOTAL ACREAGE 20.67
TOTAL LINEAR FOOTAGE OF PIPE: 2562 8"SS PLAT NO. 22-11800121
NUMBER OF LOTS 120 SAWS JOB NO. 22-1628

NO.	REVISION	DATE
1.	SAWS COMMENTS.	9/22/2022
2.	REVISED WYE FLOW DIRECTION.	12/04/2023
2.	REVISED LATERALS	

3/8/2024

STATE OF TEXAS
REBECCA ANN CARROLL
92666
LICENSED
PROFESSIONAL ENGINEER

PAPE-DAWSON ENGINEERS
SAN ANTONIO I AUSTIN I HOUSTON I FORT WORTH I DALLAS
2000 NW LOOP 410 I SAN ANTONIO, TX 78213 I 210.375.9000
TEXAS ENGINEERING FIRM #470 I TEXAS SURVEYING FIRM #10028800

SPANISH TRAILS-UNIT 2 EAST

SAN ANTONIO, TEXAS

OVERALL SANITARY SEWER PLAN
SHEET 2 OF 2

PLAT NO. 22-11800121
JOB NO. 12044-05
DATE MARCH 2024
DESIGNER AC
CHECKED DRAWN AC
SHEET C4.01

Date: Mar 08, 2024, 9:51am User ID: gkittebrew
File: P:\120\44\05\Design\Civil\051204405.dwg

THIS DOCUMENT HAS BEEN PRODUCED FROM MATERIAL THAT WAS STORED AND/OR TRANSMITTED ELECTRONICALLY AND MAY HAVE BEEN INADVERTENTLY ALTERED. RELY ONLY ON FINAL HARDCOPY MATERIALS BEARING THE CONSULTANT'S ORIGINAL SIGNATURE AND SEAL. AERIAL IMAGERY PROVIDED BY GOOGLE© UNLESS OTHERWISE NOTED. Imagery © 2016,CAPCOG,Digital Globe,Texas Orthoimagery Program, USDA Farm Service Agency.

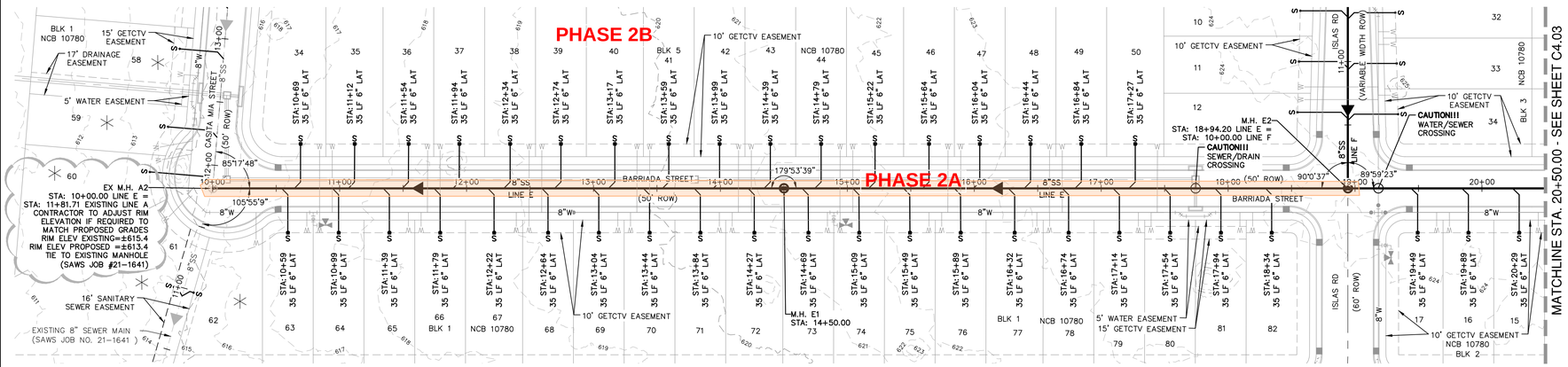

LOCATION MAP

NOT-TO-SCALE

SCALE: 1"= 50'

0' 50' 100' 150'

SEWER LEGEND

PROJECT LIMITS

EXISTING WATER

EXISTING SEWER

PROPOSED SEWER

MANHOLE

FIRE HYDRANT

PROPOSED WATER

PROPOSED SEWER LATERAL

VERTICAL STACKS ARE NEEDED FOR THESE LOTS

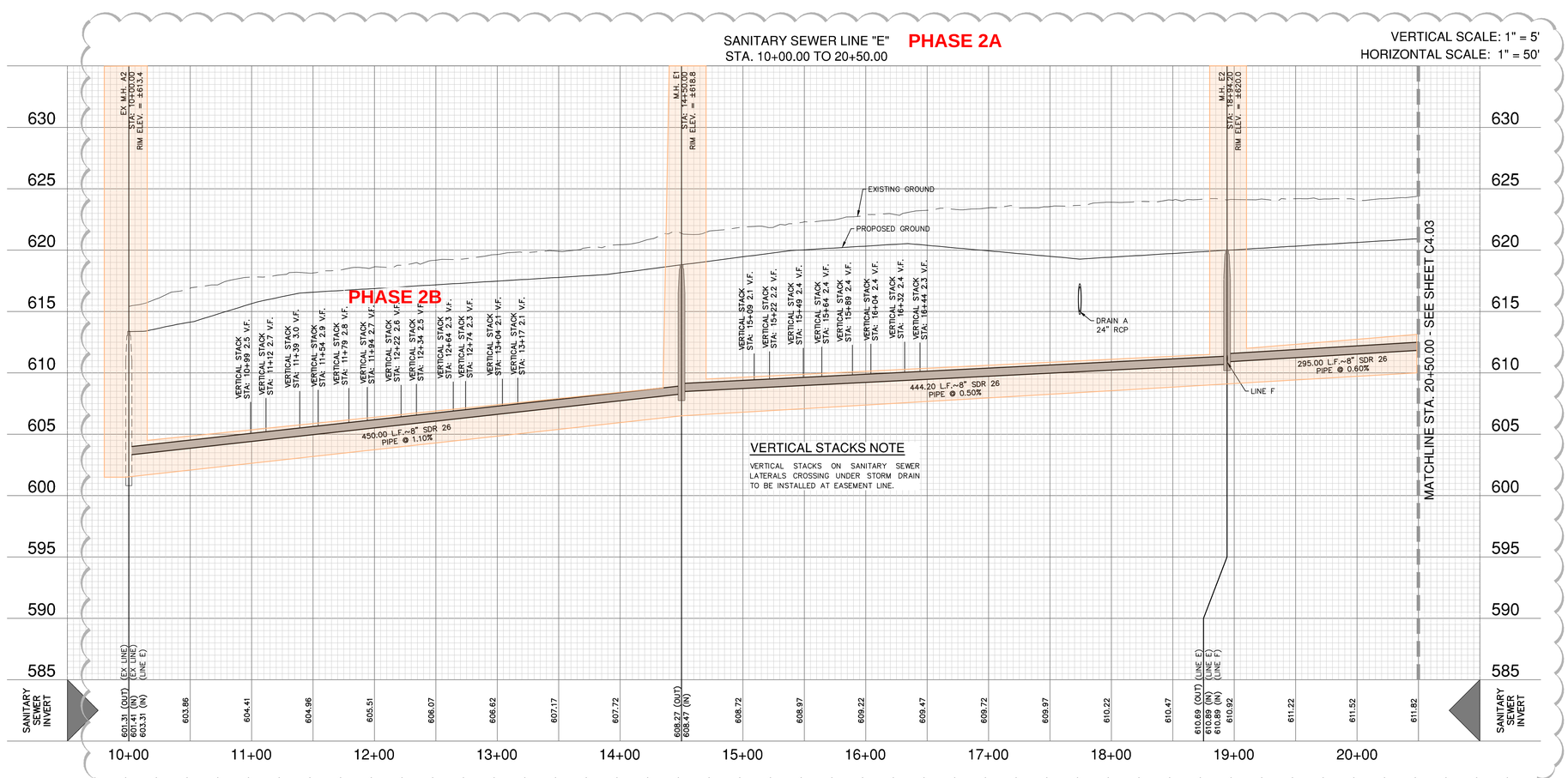

VERTICAL STACKS NOTE

VERTICAL STACKS ON SANITARY SEWER LATERALS CROSSING UNDER STORM DRAIN TO BE INSTALLED AT EASEMENT LINE.

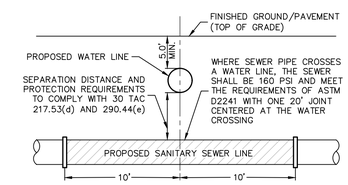

TYPICAL SANITARY SEWER/WATER CROSSING DETAIL

NOT-TO-SCALE

CAUTION!!

CONTRACTOR SHALL BE REQUIRED TO LOCATE ALL PUBLIC OR PRIVATE UTILITIES INCLUDING BUT NOT LIMITING TO: WATER, SEWER, TELEPHONE AND FIBER OPTIC LINES, SITE LIGHTING ELECTRIC, SECONDARY ELECTRIC, PRIMARY ELECTRICAL DUCTBANKS, LANDSCAPE IRRIGATION FACILITIES, AND GAS LINES. ANY UTILITY CONFLICTS THAT ARISE SHOULD BE COMMUNICATED TO THE ENGINEER IMMEDIATELY AND PRIOR TO CONSTRUCTION. THE CONTRACTOR SHALL CONTACT 1-800-DIG-TESS A MINIMUM OF 48 HOURS PRIOR TO THE START OF CONSTRUCTION. ANY DAMAGE TO EXISTING UTILITIES SHALL BE THE SOLE RESPONSIBILITY OF THE CONTRACTOR AND THE REPAIR SHALL BE AT CONTRACTOR'S SOLE EXPENSE WHETHER THE UTILITY IS SHOWN ON THESE PLANS OR NOT.

TRENCH EXCAVATION SAFETY PROTECTION:

CONTRACTOR AND/ OR CONTRACTOR'S INDEPENDENTLY RETAINED EMPLOYEE OR STRUCTURAL DESIGN/ GEOTECHNICAL/ SAFETY/EQUIPMENT CONSULTANT, IF ANY, SHALL REVIEW THESE PLANS AND ANY AVAILABLE GEOTECHNICAL INFORMATION AND THE ANTICIPATED INSTALLATION SITES WITHIN THE PROJECT WORK AREA IN ORDER TO IMPLEMENT CONTRACTOR'S TRENCH EXCAVATION SAFETY PROTECTION SYSTEMS, PROGRAMS AND /OR PROCEDURES FOR THE PROJECT DESCRIBED IN THE CONTRACT DOCUMENTS. THE CONTRACTOR'S IMPLEMENTATION OF THESE SYSTEMS, PROGRAMS AND/OR PROCEDURES SHALL PROVIDE FOR ADEQUATE TRENCH EXCAVATION SAFETY PROTECTION THAT COMPLY WITH AS A MINIMUM, OSHA STANDARDS FOR TRENCH EXCAVATIONS. SPECIFICALLY, CONTRACTOR AND/OR CONTRACTOR'S INDEPENDENTLY RETAINED EMPLOYEE OR SAFETY CONSULTANT SHALL IMPLEMENT A TRENCH SAFETY PROGRAM IN ACCORDANCE WITH OSHA STANDARDS GOVERNING THE PRESENCE AND ACTIVITIES OF INDIVIDUALS WORKING IN AND AROUND TRENCH EXCAVATION.

WASTEWATER COLLECTION LOWER
WASTEWATER TREATMENT DOS RIOS/LEON CREEK

DEVELOPER'S NAME: K.B. HOME LONE STAR, INC.
ADDRESS: 4800 FREDERICKSBURG RD
CITY: SAN ANTONIO STATE: TEXAS ZIP: 78229
PHONE# (210) 301-2886 FAX# (210) 366-2378
SAWS BLOCK MAP# 190562 TOTAL EDU'S 120 TOTAL ACREAGE 20.67
TOTAL LINEAR FOOTAGE OF PIPE: 2562 8"SS PLAT NO. 22-11800121
NUMBER OF LOTS 120 SAWS JOB NO. 22-1628

NO.	REVISION	DATE
1.	SAWS COMMENTS.	9/22/2022
2.	REVISED WYE FLOW DIRECTION. REVISED PROFILE AND RIM ELEVATIONS	12/04/2023

3/8/2024

STATE OF TEXAS
REBECCA ANN CARROLL
92666
LICENSED
PROFESSIONAL ENGINEER

PAPE-DAWSON ENGINEERS
SAN ANTONIO I AUSTIN I HOUSTON I FORT WORTH I DALLAS
2000 NW LOOP 410 I SAN ANTONIO, TX 78213 I 210.375.9000
TEXAS ENGINEERING FIRM #470 I TEXAS SURVEYING FIRM #10028800

SPANISH TRAILS-UNIT 2 EAST

SAN ANTONIO, TEXAS

SANITARY SEWER LINE E
PLAN AND PROFILE (STA. 10+00.00 TO 20+50.00)

PHASE 2A

PLAT NO. 22-11800121
JOB NO. 12044-05
DATE MARCH 2024
DESIGNER AC
CHECKED DRAWN AC
SHEET C4.02

Date: Mar 08, 2024, 10:06am User ID: gkillebrew
File: P:\120\44\05\Design\Civil\SNE\204405.dwg

THIS DOCUMENT HAS BEEN PRODUCED FROM MATERIAL THAT WAS STORED AND/OR TRANSMITTED ELECTRONICALLY AND MAY HAVE BEEN INADVERTENTLY ALTERED. RELY ONLY ON FINAL HARDCOPY MATERIALS BEARING THE CONSULTANT'S ORIGINAL SIGNATURE AND SEAL. AERIAL IMAGERY PROVIDED BY GOOGLE© UNLESS OTHERWISE NOTED. Imagery © 2016,CAPCOG,Digital Globe,Texas Orthoimagery Program, USDA Farm Service Agency.

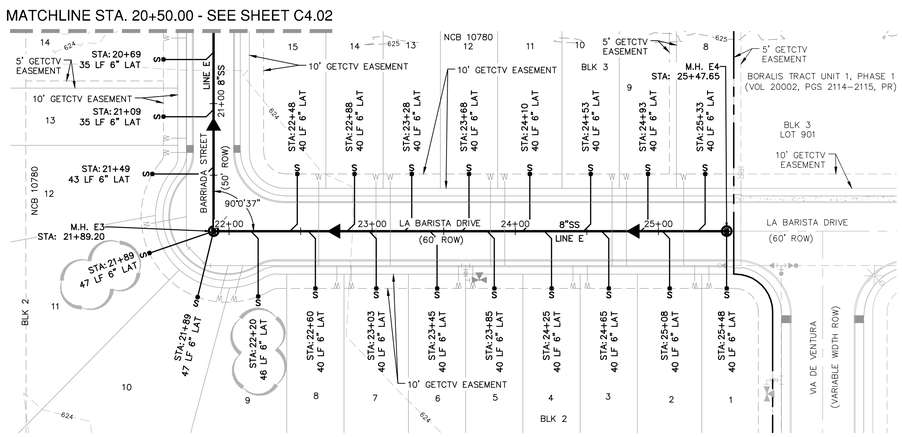

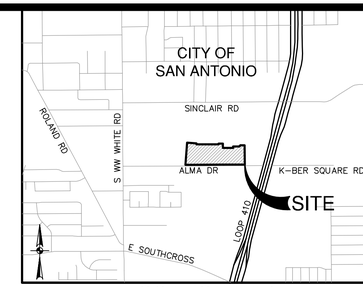

LOCATION MAP

NOT-TO-SCALE

SCALE: 1"= 50'

0' 50' 100' 150'

SEWER LEGEND

PROJECT LIMITS

EXISTING WATER

EXISTING SEWER

PROPOSED SEWER

MANHOLE

FIRE HYDRANT

PROPOSED WATER

PROPOSED SEWER LATERAL

VERTICAL STACKS ARE NEEDED FOR THESE LOTS

PHASE 2A

SANITARY SEWER LINE "E"
STA. 20+50.00 TO END

VERTICAL SCALE: 1" = 5'
HORIZONTAL SCALE: 1" = 50'

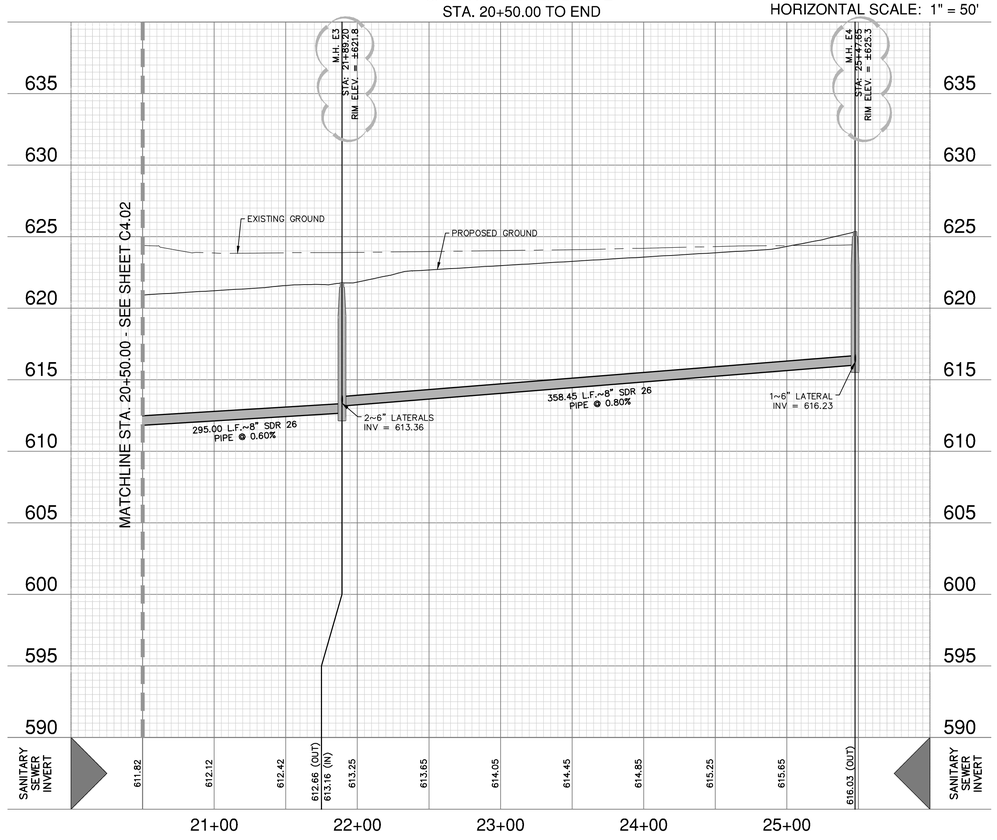

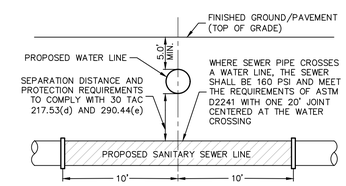

TYPICAL SANITARY SEWER/WATER CROSSING DETAIL

NOT-TO-SCALE

CAUTION!!

CONTRACTOR SHALL BE REQUIRED TO LOCATE ALL PUBLIC OR PRIVATE UTILITIES INCLUDING BUT NOT LIMITING TO: WATER, SEWER, TELEPHONE AND FIBER OPTIC LINES, SITE LIGHTING ELECTRIC, SECONDARY ELECTRIC, PRIMARY ELECTRICAL DUCTBANKS, LANDSCAPE IRRIGATION FACILITIES, AND GAS LINES. ANY UTILITY CONFLICTS THAT ARISE SHOULD BE COMMUNICATED TO THE ENGINEER IMMEDIATELY AND PRIOR TO CONSTRUCTION. THE CONTRACTOR SHALL CONTACT 1-800-DIG-TESS A MINIMUM OF 48 HOURS PRIOR TO THE START OF CONSTRUCTION. ANY DAMAGE TO EXISTING UTILITIES SHALL BE THE SOLE RESPONSIBILITY OF THE CONTRACTOR AND THE REPAIR SHALL BE AT CONTRACTOR'S SOLE EXPENSE WHETHER THE UTILITY IS SHOWN ON THESE PLANS OR NOT.

TRENCH EXCAVATION SAFETY PROTECTION:

CONTRACTOR AND/ OR CONTRACTOR'S INDEPENDENTLY RETAINED EMPLOYEE OR STRUCTURAL DESIGN/ GEOTECHNICAL/ SAFETY/EQUIPMENT CONSULTANT, IF ANY, SHALL REVIEW THESE PLANS AND ANY AVAILABLE GEOTECHNICAL INFORMATION AND THE ANTICIPATED INSTALLATION SITES WITHIN THE PROJECT WORK AREA IN ORDER TO IMPLEMENT CONTRACTOR'S TRENCH EXCAVATION SAFETY PROTECTION SYSTEMS, PROGRAMS AND /OR PROCEDURES FOR THE PROJECT DESCRIBED IN THE CONTRACT DOCUMENTS. THE CONTRACTOR'S IMPLEMENTATION OF THESE SYSTEMS, PROGRAMS AND/OR PROCEDURES SHALL PROVIDE FOR ADEQUATE TRENCH EXCAVATION SAFETY PROTECTION THAT COMPLY WITH AS A MINIMUM, OSHA STANDARDS FOR TRENCH EXCAVATIONS. SPECIFICALLY, CONTRACTOR AND/OR CONTRACTOR'S INDEPENDENTLY RETAINED EMPLOYEE OR SAFETY CONSULTANT SHALL IMPLEMENT A TRENCH SAFETY PROGRAM IN ACCORDANCE WITH OSHA STANDARDS GOVERNING THE PRESENCE AND ACTIVITIES OF INDIVIDUALS WORKING IN AND AROUND TRENCH EXCAVATION.

WASTEWATER COLLECTION LOWER
WASTEWATER TREATMENT DOS RIOS/LEON CREEK

DEVELOPER'S NAME: K.B. HOME LONE STAR, INC.
ADDRESS: 4800 FREDERICKSBURG RD
CITY: SAN ANTONIO STATE: TEXAS ZIP: 78229
PHONE# (210) 301-2886 FAX# (210) 366-2378
SAWS BLOCK MAP# 190562 TOTAL EDU'S 120 TOTAL ACREAGE 20.67
TOTAL LINEAR FOOTAGE OF PIPE: 2562 8"SS PLAT NO. 22-11800121
NUMBER OF LOTS 120 SAWS JOB NO. 22-1628

NO.	REVISION	DATE
1.	SAWS COMMENTS	9/22/2022
2.	REVISED LATERALS AND RIM ELEVATIONS	12/04/2023

12/4/2023

STATE OF TEXAS
REBECCA ANN CARROLL
92666
LICENSED
PROFESSIONAL ENGINEER

PAPE-DAWSON ENGINEERS
SAN ANTONIO I AUSTIN I HOUSTON I FORT WORTH I DALLAS
2000 NW LOOP 410 I SAN ANTONIO, TX 78213 I 210.375.9000
TEXAS ENGINEERING FIRM #470 I TEXAS SURVEYING FIRM #10028800

SPANISH TRAILS-UNIT 2 EAST

SAN ANTONIO, TEXAS

SANITARY SEWER LINE E
PLAN AND PROFILE (STA. 20+50.00 TO END)

PHASE 2A

PLAT NO. 22-11800121
JOB NO. 12044-05
DATE DECEMBER 2023
DESIGNER AC
CHECKED DRAWN AC
SHEET C4.03

Date: Dec 04, 2023, 10:42am User ID: gkillebrew
File: P:\120\44\05\Design\Civil\SNE\204405.dwg

THIS DOCUMENT HAS BEEN PRODUCED FROM MATERIAL THAT WAS STORED AND/OR TRANSMITTED ELECTRONICALLY AND MAY HAVE BEEN INADVERTENTLY ALTERED. RELY ONLY ON FINAL HARDCOPY MATERIALS BEARING THE CONSULTANT'S ORIGINAL SIGNATURE AND SEAL. AERIAL IMAGERY PROVIDED BY GOOGLE© UNLESS OTHERWISE NOTED. Imagery © 2016,CAPCOG,Digital Globe,Texas OrthoImagery Program, USDA Farm Service Agency.

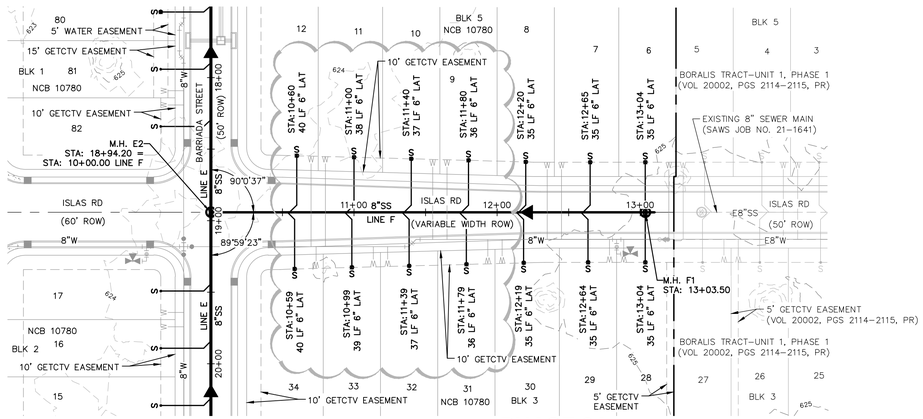

PHASE 2A

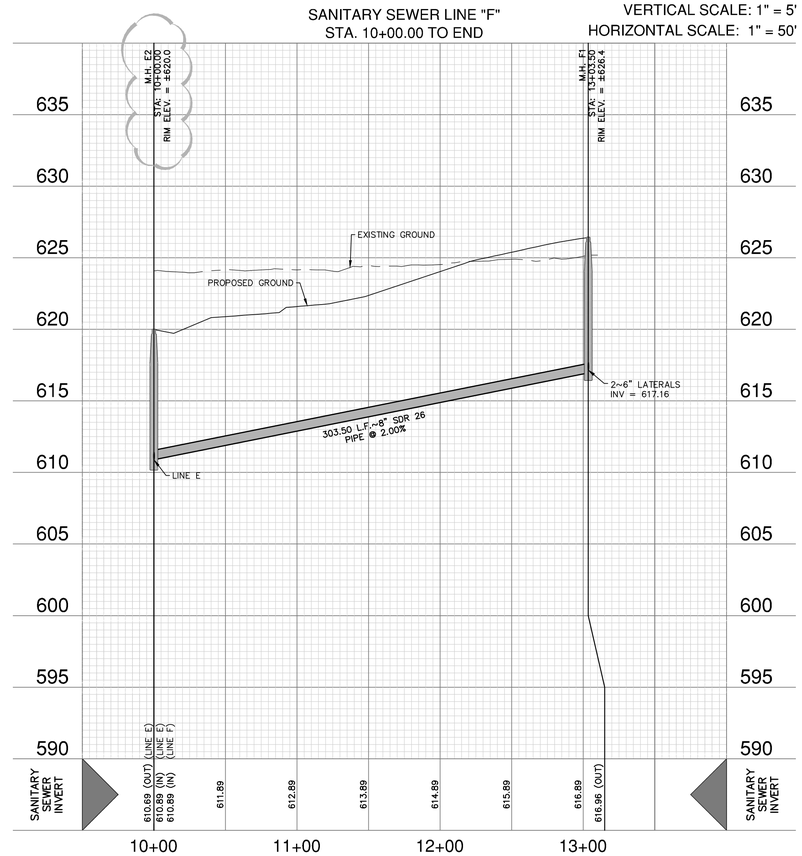

LOCATION MAP

NOT-TO-SCALE

SCALE: 1"= 50'

0' 50' 100' 150'

SEWER LEGEND

PROJECT LIMITS

EXISTING WATER — W

EXISTING SEWER — SS

PROPOSED SEWER — SS — MANHOLE

PROPOSED WATER — FIRE HYDRANT

PROPOSED SEWER LATERAL — S

VERTICAL STACKS ARE NEEDED FOR THESE LOTS

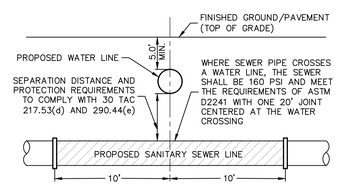

TYPICAL SANITARY SEWER/WATER CROSSING DETAIL

NOT-TO-SCALE

CAUTION!!

CONTRACTOR SHALL BE REQUIRED TO LOCATE ALL PUBLIC OR PRIVATE UTILITIES INCLUDING BUT NOT LIMITING TO: WATER, SEWER, TELEPHONE AND FIBER OPTIC LINES, SITE LIGHTING ELECTRIC, SECONDARY ELECTRIC, PRIMARY ELECTRICAL DUCTBANKS, LANDSCAPE IRRIGATION FACILITIES, AND GAS LINES. ANY UTILITY CONFLICTS THAT ARISE SHOULD BE COMMUNICATED TO THE ENGINEER IMMEDIATELY AND PRIOR TO CONSTRUCTION. THE CONTRACTOR SHALL CONTACT 1-800-DIG-TESS A MINIMUM OF 48 HOURS PRIOR TO THE START OF CONSTRUCTION. ANY DAMAGE TO EXISTING UTILITIES SHALL BE THE SOLE RESPONSIBILITY OF THE CONTRACTOR AND THE REPAIR SHALL BE AT CONTRACTOR'S SOLE EXPENSE WHETHER THE UTILITY IS SHOWN ON THESE PLANS OR NOT.

TRENCH EXCAVATION SAFETY PROTECTION:

CONTRACTOR AND/ OR CONTRACTOR'S INDEPENDENTLY RETAINED EMPLOYEE OR STRUCTURAL DESIGN/ GEOTECHNICAL/ SAFETY/EQUIPMENT CONSULTANT, IF ANY, SHALL REVIEW THESE PLANS AND ANY AVAILABLE GEOTECHNICAL INFORMATION AND THE ANTICIPATED INSTALLATION SITES WITHIN THE PROJECT WORK AREA IN ORDER TO IMPLEMENT CONTRACTOR'S TRENCH EXCAVATION SAFETY PROTECTION SYSTEMS, PROGRAMS AND /OR PROCEDURES FOR THE PROJECT DESCRIBED IN THE CONTRACT DOCUMENTS. THE CONTRACTOR'S IMPLEMENTATION OF THESE SYSTEMS, PROGRAMS AND/OR PROCEDURES SHALL PROVIDE FOR ADEQUATE TRENCH EXCAVATION SAFETY PROTECTION THAT COMPLY WITH AS A MINIMUM, OSHA STANDARDS FOR TRENCH EXCAVATIONS. SPECIFICALLY, CONTRACTOR AND/OR CONTRACTOR'S INDEPENDENTLY RETAINED EMPLOYEE OR SAFETY CONSULTANT SHALL IMPLEMENT A TRENCH SAFETY PROGRAM IN ACCORDANCE WITH OSHA STANDARDS GOVERNING THE PRESENCE AND ACTIVITIES OF INDIVIDUALS WORKING IN AND AROUND TRENCH EXCAVATION.

WASTEWATER COLLECTION LOWER
WASTEWATER TREATMENT DOS RIOS/LEON CREEK

DEVELOPER'S NAME: K.B. HOME LONE STAR, INC.
ADDRESS: 4800 FREDERICKSBURG RD
CITY: SAN ANTONIO STATE: TEXAS ZIP: 78229
PHONE# (210) 301-2886 FAX# (210) 366-2378
SAWS BLOCK MAP# 190562 TOTAL EDU'S 120 TOTAL ACREAGE 20.67
TOTAL LINEAR FOOTAGE OF PIPE: 2562 8"SS PLAT NO. 22-11800121
NUMBER OF LOTS 120 SAWS JOB NO. 22-1628

NO.	REVISION	DATE
1.	SAWS COMMENTS.	9/22/2022
2.	REVISED LATERALS AND RIM ELEVATION	04/18/2023

12/4/2023

STATE OF TEXAS
REBECCA ANN CARROLL
92666
LICENSED
PROFESSIONAL ENGINEER

PAPE-DAWSON ENGINEERS
SAN ANTONIO I AUSTIN I HOUSTON I FORT WORTH I DALLAS
2000 NW LOOP 410 I SAN ANTONIO, TX 78213 I 210.375.9000
TEXAS ENGINEERING FIRM #470 I TEXAS SURVEYING FIRM #10028800

SPANISH TRAILS-UNIT 2 EAST

SAN ANTONIO, TEXAS

SANITARY SEWER LINE F
PLAN AND PROFILE

PHASE 2A

PLAT NO. 22-11800121
JOB NO. 12044-05
DATE DECEMBER 2023
DESIGNER AC
CHECKED DRAWN AC
SHEET C4.04

Date: Dec 04, 2023, 10:53am User ID: gkilbebrew
File: P:\120\44\05\Design\Civil\SNF204405.dwg

THIS DOCUMENT HAS BEEN PRODUCED FROM MATERIAL THAT WAS STORED AND/OR TRANSMITTED ELECTRONICALLY AND MAY HAVE BEEN INADVERTENTLY ALTERED. RELY ONLY ON FINAL HARDCOPY MATERIALS BEARING THE CONSULTANT'S ORIGINAL SIGNATURE AND SEAL. AERIAL IMAGERY PROVIDED BY GOOGLE© UNLESS OTHERWISE NOTED. Imagery © 2016,CAPCOG,Digital Globe,Texas Orthoimagery Program, USDA Farm Service Agency.

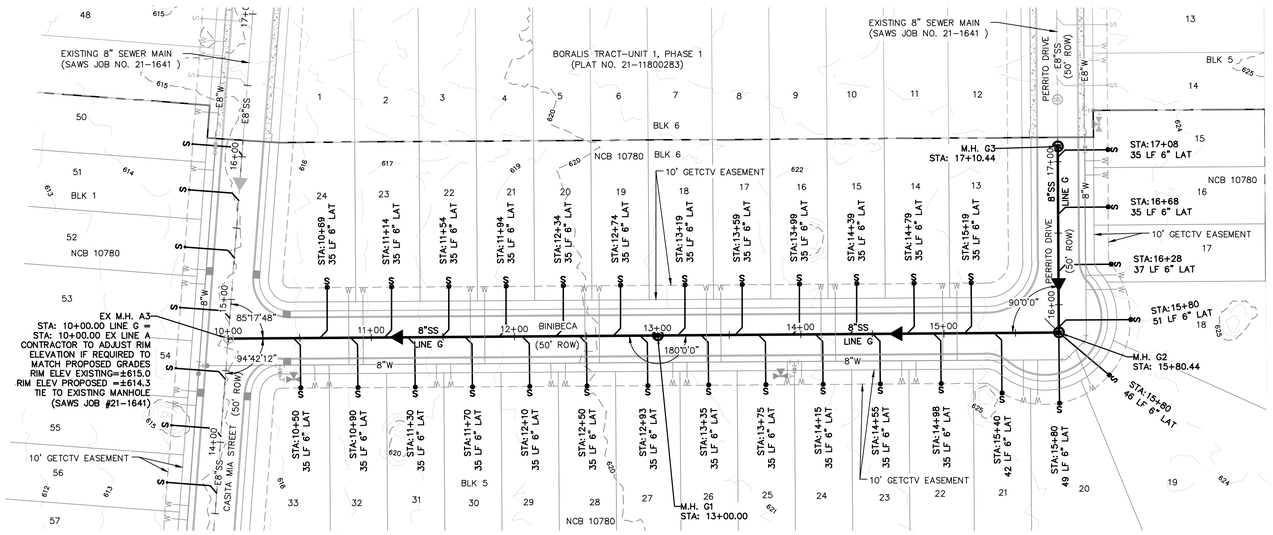

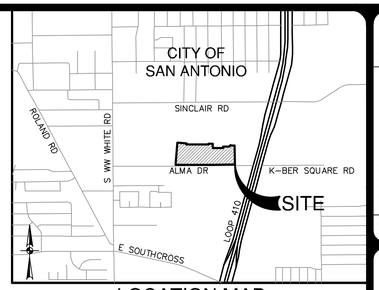

LOCATION MAP

NOT-TO-SCALE

SCALE: 1"= 50'

0' 50' 100' 150'

SEWER LEGEND

PROJECT LIMITS

EXISTING WATER

EXISTING SEWER

PROPOSED SEWER

PROPOSED WATER

PROPOSED SEWER LATERAL

SANITARY SEWER LINE "G"
STA. 10+00.00 TO END

VERTICAL SCALE: 1" = 5'
HORIZONTAL SCALE: 1" = 50'

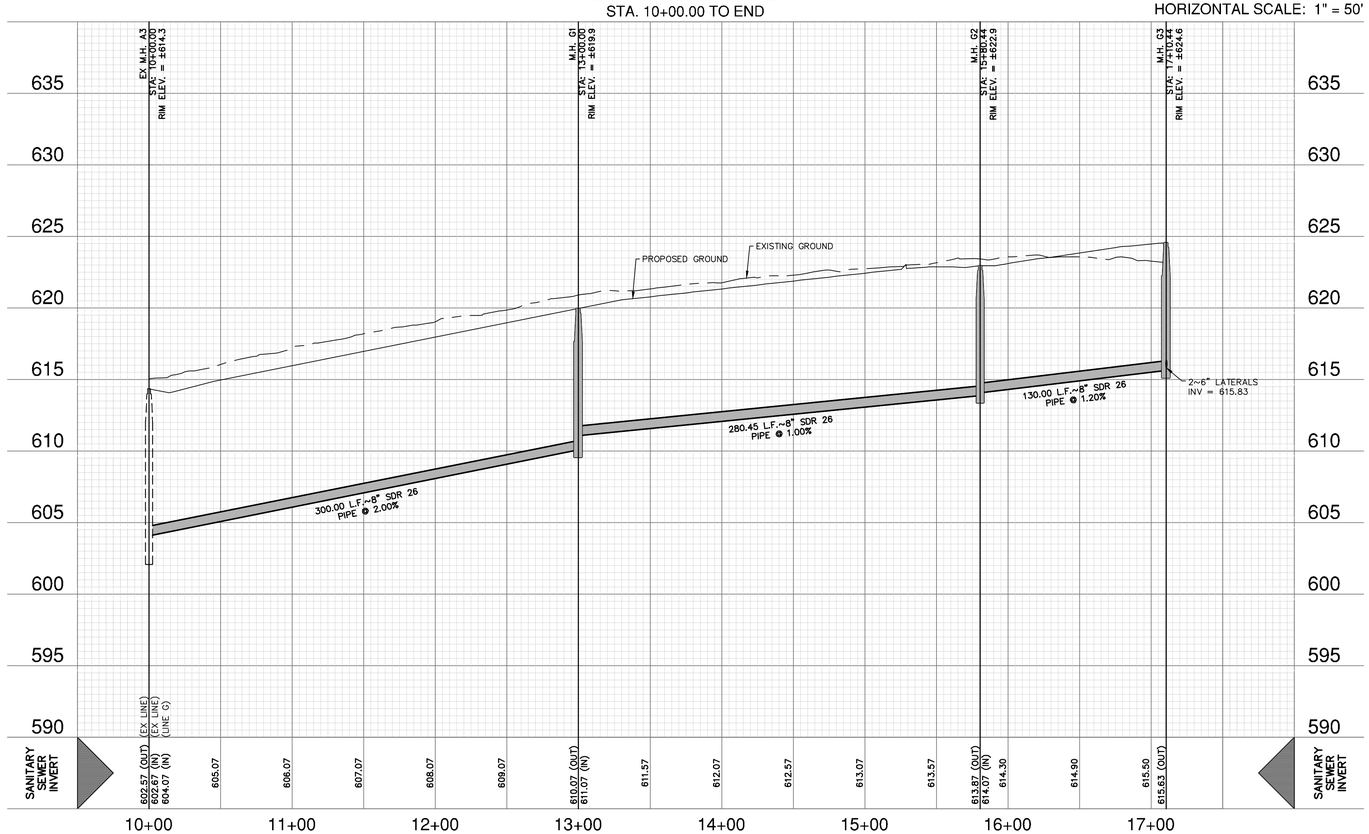

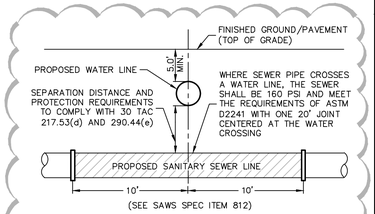

(SEE SAWS SPEC ITEM 812)

TYPICAL SANITARY SEWER/WATER CROSSING DETAIL

NOT-TO-SCALE

CAUTION!!

CONTRACTOR SHALL BE REQUIRED TO LOCATE ALL PUBLIC OR PRIVATE UTILITIES INCLUDING BUT NOT LIMITING TO: WATER, SEWER, TELEPHONE AND FIBER OPTIC LINES, SITE LIGHTING ELECTRIC, SECONDARY ELECTRIC, PRIMARY ELECTRICAL DUCTBANKS, LANDSCAPE IRRIGATION FACILITIES, AND GAS LINES. ANY UTILITY CONFLICTS THAT ARISE SHOULD BE COMMUNICATED TO THE ENGINEER IMMEDIATELY AND PRIOR TO CONSTRUCTION. THE CONTRACTOR SHALL CONTACT 1-800-DIG-TESS A MINIMUM OF 48 HOURS PRIOR TO THE START OF CONSTRUCTION. ANY DAMAGE TO EXISTING UTILITIES SHALL BE THE SOLE RESPONSIBILITY OF THE CONTRACTOR AND THE REPAIR SHALL BE AT CONTRACTOR'S SOLE EXPENSE WHETHER THE UTILITY IS SHOWN ON THESE PLANS OR NOT.

TRENCH EXCAVATION SAFETY PROTECTION:

CONTRACTOR AND/ OR CONTRACTOR'S INDEPENDENTLY RETAINED EMPLOYEE OR STRUCTURAL DESIGN/ GEOTECHNICAL/ SAFETY/EQUIPMENT CONSULTANT, IF ANY, SHALL REVIEW THESE PLANS AND ANY AVAILABLE GEOTECHNICAL INFORMATION AND THE ANTICIPATED INSTALLATION SITES WITHIN THE PROJECT WORK AREA IN ORDER TO IMPLEMENT CONTRACTOR'S TRENCH EXCAVATION SAFETY PROTECTION SYSTEMS, PROGRAMS AND /OR PROCEDURES FOR THE PROJECT DESCRIBED IN THE CONTRACT DOCUMENTS. THE CONTRACTOR'S IMPLEMENTATION OF THESE SYSTEMS, PROGRAMS AND/OR PROCEDURES SHALL PROVIDE FOR ADEQUATE TRENCH EXCAVATION SAFETY PROTECTION THAT COMPLY WITH AS A MINIMUM, OSHA STANDARDS FOR TRENCH EXCAVATIONS. SPECIFICALLY, CONTRACTOR AND/OR CONTRACTOR'S INDEPENDENTLY RETAINED EMPLOYEE OR SAFETY CONSULTANT SHALL IMPLEMENT A TRENCH SAFETY PROGRAM IN ACCORDANCE WITH OSHA STANDARDS GOVERNING THE PRESENCE AND ACTIVITIES OF INDIVIDUALS WORKING IN AND AROUND TRENCH EXCAVATION.

WASTEWATER COLLECTION LOWER
WASTEWATER TREATMENT DOS RIOS/LEON CREEK

DEVELOPER'S NAME: K.B. HOME LONE STAR, INC.
ADDRESS: 4800 FREDERICKSBURG RD
CITY: SAN ANTONIO STATE: TEXAS ZIP: 78229
PHONE# (210) 301-2886 FAX# (210) 366-2378
SAWS BLOCK MAP# 190562 TOTAL EDU'S 120 TOTAL ACREAGE 20.67
TOTAL LINEAR FOOTAGE OF PIPE: 2562 8"SS PLAT NO. 22-11800121
NUMBER OF LOTS 120 SAWS JOB NO. 22-1628

NO.	REVISION	DATE
1.	SAWS COMMENTS.	9/22/2022

9/22/2022

STATE OF TEXAS
REBECCA ANN CARROLL
92666
LICENSED
PROFESSIONAL ENGINEER

PAPE-DAWSON ENGINEERS
SAN ANTONIO I AUSTIN I HOUSTON I FORT WORTH I DALLAS
2000 NW LOOP 410 I SAN ANTONIO, TX 78213 I 210.375.9000
TEXAS ENGINEERING FIRM #470 I TEXAS SURVEYING FIRM #10028800

SPANISH TRAILS-UNIT 2 EAST

SAN ANTONIO, TEXAS

SANITARY SEWER LINE G
PLAN AND PROFILE

PHASE 2B

PLAT NO. 22-11800121
JOB NO. 12044-05
DATE SEPTEMBER 2022
DESIGNER ABC
CHECKED ____ DRAWN AC
SHEET C4.05

Date: Sep 22, 2022, 9:42am User ID: irodriguez
File: P:\120\44\05\Design\Civil\SN02044105.dwg

SAWS CONSTRUCTION NOTES

(LAST REVISED JULY 2017)

SAWS GENERAL SECTION

1. ALL MATERIALS AND CONSTRUCTION PROCEDURES WITHIN THE SCOPE OF THIS CONTRACT SHALL BE APPROVED BY THE SAN ANTONIO WATER SYSTEM (SAWS) AND COMPLY WITH THE PLANS, SPECIFICATIONS, GENERAL CONDITIONS AND WITH THE FOLLOWING AS APPLICABLE:

   A. CURRENT TEXAS COMMISSION ON ENVIRONMENTAL QUALITY (TCEQ) "DESIGN CRITERIA FOR DOMESTIC WASTEWATER SYSTEM"; TEXAS ADMINISTRATIVE CODE (TAC) TITLE 30 PART 1 CHAPTER 217 AND "PUBLIC DRINKING WATER"; TAC TITLE 30 PART 1 CHAPTER 290.
   B. CURRENT TXDOT "STANDARD SPECIFICATIONS FOR CONSTRUCTION OF HIGHWAYS, STREETS AND DRAINAGE".
   C. CURRENT "SAN ANTONIO WATER SYSTEM STANDARD SPECIFICATIONS FOR WATER AND SANITARY SEWER CONSTRUCTION";
   D. CURRENT CITY OF SAN ANTONIO "STANDARD SPECIFICATIONS FOR PUBLIC WORKS CONSTRUCTION";
   E. CURRENT CITY OF SAN ANTONIO "UTILITY EXCAVATION CRITERIA MANUAL" (UECM).

2. THE CONTRACTOR SHALL NOT PROCEED WITH ANY PIPE INSTALLATION WORK UNTIL THEY OBTAIN A COPY OF THE APPROVED COUNTER PERMIT OR GENERAL CONSTRUCTION PERMIT (GCP) FROM THE CONSULTANT AND HAS BEEN NOTIFIED BY SAWS CONSTRUCTION INSPECTION DIVISION TO PROCEED WITH THE WORK AND HAS ARRANGED A MEETING WITH THE INSPECTOR AND CONSULTANT FOR THE WORK REQUIREMENTS. WORK COMPLETED BY THE CONTRACTOR WITHOUT AN APPROVED COUNTER PERMIT AND/OR A GCP WILL BE SUBJECT TO REMOVAL AND REPLACEMENT AT THE EXPENSE OF THE CONTRACTORS AND/OR THE DEVELOPER.

3. THE CONTRACTOR SHALL OBTAIN THE SAWS STANDARD DETAILS FROM THE SAWS WEBSITE, HTTP://WWW.SAWS.ORG/BUSINESS_CENTER/SPECS. UNLESS OTHERWISE NOTED WITHIN THE DESIGN PLANS.

4. THE CONTRACTOR IS TO MAKE ARRANGEMENTS WITH THE SAWS CONSTRUCTION INSPECTION DIVISION AT (210) 233-2973, ON NOTIFICATION PROCEDURES THAT WILL BE USED TO NOTIFY AFFECTED HOME RESIDENTS AND/OR PROPERTY OWNERS 48 HOURS PRIOR TO BEGINNING ANY WORK.

5. LOCATION AND DEPTH OF EXISTING UTILITIES AND SERVICE LATERALS SHOWN ON THE PLANS ARE UNDERSTOOD TO BE APPROXIMATE. ACTUAL LOCATIONS AND DEPTHS MUST BE FIELD VERIFIED BY THE CONTRACTOR AT LEAST 1 WEEK PRIOR TO CONSTRUCTION. IT SHALL BE THE CONTRACTOR'S RESPONSIBILITY TO LOCATE UTILITY SERVICE LINES AS REQUIRED FOR CONSTRUCTION AND TO PROTECT THEM DURING CONSTRUCTION AT NO COST TO SAWS.

6. THE CONTRACTOR SHALL VERIFY THE EXACT LOCATION OF UNDERGROUND UTILITIES AND DRAINAGE STRUCTURES AT LEAST 1-2 WEEKS PRIOR TO CONSTRUCTION WHETHER SHOWN ON PLANS OR NOT. PLEASE ALLOW UP TO 7 BUSINESS DAYS FOR LOCATES REQUESTING PIPE LOCATION MARKERS ON SAWS FACILITIES. THE FOLLOWING CONTACT INFORMATION ARE SUPPLIED FOR VERIFICATION PURPOSES:

   - SAWS UTILITY LOCATES: HTTP://WWW.SAWS.ORG/SERVICE/LOCATES
   - COSA DRAINAGE (210) 207-0724 OR (210) 207-6026
   - COSA TRAFFIC SIGNAL OPERATIONS (210) 206-8480
   - COSA TRAFFIC SIGNAL DAMAGES (210) 207-3951
   - TEXAS STATE WIDE ONE CALL LOCATOR 1-800-545-6005 OR 811

7. THE CONTRACTOR SHALL BE RESPONSIBLE FOR RESTORING EXISTING FENCES, CURBS, STREETS, DRIVEWAYS, SIDEWALKS, LANDSCAPING AND STRUCTURES TO ITS ORIGINAL OR BETTER CONDITION IF DAMAGES ARE MADE AS A RESULT OF THE PROJECT'S CONSTRUCTION.

8. ALL WORK IN TEXAS DEPARTMENT OF TRANSPORTATION (TXDOT) AND/OR BEXAR COUNTY RIGHT-OF-WAY SHALL BE DONE IN ACCORDANCE WITH RESPECTIVE CONSTRUCTION SPECIFICATIONS AND PERMIT REQUIREMENTS.

9. THE CONTRACTOR SHALL COMPLY WITH CITY OF SAN ANTONIO OR OTHER GOVERNING MUNICIPALITY'S TREE ORDINANCES WHEN EXCAVATING NEAR TREES.

10. THE CONTRACTOR SHALL NOT PLACE ANY WASTE MATERIALS IN THE 100-YEAR FLOOD PLAIN WITHOUT FIRST OBTAINING AN APPROVED FLOOD PLAIN PERMIT.

11. HOLIDAY WORK: CONTRACTORS WILL NOT BE ALLOWED TO PERFORM SAWS WORK ON SAWS RECOGNIZED HOLIDAYS. REQUEST SHOULD BE SENT TO CONSTWORKREQ@SAWS.ORG.

    WEEKEND WORK: CONTRACTORS ARE REQUIRED TO NOTIFY THE SAWS INSPECTION CONSTRUCTION DEPARTMENT 48 HOURS IN ADVANCE TO REQUEST WEEKEND WORK. REQUEST SHOULD BE SENT TO CONSTWORKREQ@SAWS.ORG.

    ANY AND ALL SAWS UTILITY WORK INSTALLED WITHOUT HOLIDAY/WEEKEND APPROVAL WILL BE SUBJECT TO BE UNCOVERED FOR PROPER INSPECTION.

12. COMPACTION NOTE (ITEM 804): THE CONTRACTOR SHALL BE RESPONSIBLE FOR MEETING THE COMPACTION REQUIREMENTS ON ALL TRENCH BACKFILL AND FOR PAYING FOR THE TESTS PERFORMED BY A THIRD PARTY. COMPACTION TESTS WILL BE DONE AT ONE LOCATION POINT RANDOMLY SELECTED, OR AS INDICATED BY THE SAWS INSPECTOR AND/OR THE TEST ADMINISTRATOR, PER EACH 12-INCH LOOSE LIFT PER 400 LINEAR FEET AT A MINIMUM. THIS PROJECT WILL NOT BE ACCEPTED AND FINALIZED BY SAWS WITHOUT THIS REQUIREMENT BEING MET AND VERIFIED BY PROVIDING ALL NECESSARY DOCUMENTED TEST RESULTS.

13. A COPY OF ALL TESTING REPORTS SHALL BE FORWARDED TO SAWS CONSTRUCTION INSPECTION DIVISION.

SAWS SEWER NOTES

1. THE CONTRACTOR IS RESPONSIBLE FOR ENSURING THAT NO SANITARY SEWER OVERFLOW (SSO) OCCURS AS A RESULT OF THEIR WORK. ALL CONTRACTOR PERSONNEL RESPONSIBLE FOR SSO PREVENTION AND CONTROL SHALL BE TRAINED ON PROPER RESPONSE. SHOULD AN SSO OCCUR, THE CONTRACTOR SHALL:

   A. IDENTIFY THE SOURCE OF THE SSO AND NOTIFY SAWS EMERGENCY OPERATIONS CENTER (EOC) IMMEDIATELY AT (210) 233-2014. PROVIDE THE ADDRESS OF THE SPILL AND AN ESTIMATED VOLUME OR FLOW.
   B. ATTEMPT TO ELIMINATE THE SOURCE OF THE SSO.
   C. CONTAIN SEWAGE FROM THE SSO TO THE EXTENT OF PREVENTING A POSSIBLE CONTAMINATION OF WATERWAYS.
   D. CLEAN UP SPILL SITE (RETURN CONTAINED SEWAGE TO THE COLLECTION SYSTEM IF POSSIBLE) AND PROPERLY DISPOSE OF CONTAMINATED SOIL/MATERIALS.
   E. CLEAN THE AFFECTED SEWER MAINS AND REMOVE ANY DEBRIS.
   F. MEET ALL POST-SSO REQUIREMENTS AS PER THE EPA CONSENT DECREE, INCLUDING LINE CLEANING AND TELEVISING THE AFFECTED SEWER MAINS (AT SAWS DIRECTION) WITHIN 24 HOURS.

SHOULD THE CONTRACTOR FAIL TO ADDRESS AN SSO IMMEDIATELY AND TO SAWS SATISFACTION, THEY WILL BE RESPONSIBLE FOR ALL COSTS INCURRED BY SAWS, INCLUDING ANY FINES FROM EPA, TCEQ AND/OR ANY OTHER FEDERAL, STATE OR LOCAL AGENCIES.

NO SEPARATE MEASUREMENT OR PAYMENT SHALL BE MADE FOR THIS WORK. ALL WORK SHALL BE DONE ACCORDING TO GUIDELINES SET BY THE TCEQ AND SAWS.

2. IF BYPASS PUMPING IS REQUIRED, THE CONTRACTOR SHALL PERFORM SUCH WORK IN ACCORDANCE WITH SAWS STANDARD SPECIFICATION FOR WATER AND SANITARY SEWER CONSTRUCTION, ITEM NO. 864, "BYPASS PUMPING".

3. PRIOR TO TIE-INS, ANY SHUTDOWNS OF EXISTING FORCE MAINS OF ANY SIZE MUST BE COORDINATED WITH THE SAWS CONSTRUCTION INSPECTION DIVISION AT (210) 233-2973 AT LEAST ONE WEEK IN ADVANCE OF THE SHUTDOWN. THE CONTRACTOR MUST ALSO PROVIDE A SEQUENCE OF WORK AS RELATED TO THE TIE-INS. THIS IS AT NO ADDITIONAL COST TO SAWS OR THE PROJECT AND IT IS THE RESPONSIBILITY OF THE CONTRACTOR TO SEQUENCE THE WORK ACCORDINGLY.

4. SEWER PIPE WHERE WATER LINE CROSSES SHALL BE 160 PSI AND MEET THE REQUIREMENTS OF ASTM D2241, TAC 217.53 AND TCEQ 290.44(E)(4)(B). CONTRACTOR SHALL CENTER A 20' JOINT OF 160 PSI PRESSURE RATED PVC AT THE PROPOSED WATER CROSSING.

5. ELEVATIONS POSTED FOR TOP OF MANHOLES ARE FOR REFERENCE ONLY: IT SHALL BE THE RESPONSIBILITY OF THE CONTRACTOR TO MAKE ALLOWANCES AND ADJUSTMENTS FOR TOP OF MANHOLES TO MATCH THE FINISHED GRADE OF THE PROJECT'S IMPROVEMENTS. (NSPI)

6. SPILLS, OVERFLOWS, OR DISCHARGES OF WASTEWATER: ALL SPILLS, OVERFLOWS, OR DISCHARGES OF WASTEWATER, RECYCLED WATER, PETROLEUM PRODUCTS, OR CHEMICALS MUST BE REPORTED IMMEDIATELY TO THE SAWS INSPECTOR ASSIGNED TO THE COUNTER PERMIT OR GENERAL CONSTRUCTION PERMIT (GCP). THIS REQUIREMENT APPLIES TO EVERY SPILL, OVERFLOW, OR DISCHARGE REGARDLESS OF SIZE.

7. MANHOLE AND ALL PIPE TESTING (INCLUDING THE TV INSPECTION) MUST BE PERFORMED AND PASSED PRIOR TO FINAL FIELD ACCEPTANCE BY SAWS CONSTRUCTION INSPECTION DIVISION, AS PER THE SAWS SPECIFICATIONS FOR WATER AND SANITARY SEWER CONSTRUCTION.

8. ALL PVC PIPE OVER 14 FEET OF COVER SHALL BE EXTRA STRENGTH WITH MINIMUM PIPE STIFFNESS OF 115 PSI.

PROJECT SEWER NOTES

1. ALL RESIDENTIAL SEWER SERVICE LATERALS ARE 6" DIA. AND SHALL BE EXTENDED TO 10' PAST THE PROPERTY LINE AND CAPPED AND SEALED. CONTRACTOR SHALL INSTALL A 2" X 4" STAKE, FOUR (4) FEET LONG, TWO (2) FEET DEEP INTO THE GROUND AT THE END OF EACH SERVICE. NO SEPARATE PAY ITEM.
2. CONTRACTOR TO INSTALL CLEANOUTS AT THE END OF ALL SEWER LATERALS, PER LATERAL DETAIL SHEET C4.20.
3. NO VERTICAL STACKS ALLOWED FOR ANY LOTS UNLESS OTHERWISE SPECIFIED BY THE ENGINEER.
4. ALL 6" SEWER LATERALS WILL BE SET AT 2% GRADE FROM THE MAIN TO THE PROPERTY LINE.
5. WHEN HORIZONTAL DISTANCE BETWEEN SEWER PIPES AND WATER MAIN IS LESS THAN 9 FOOT OF SEPARATION, SEWER MAIN SHALL BE INSTALLED WITH 150 PSI (MIN) PRESSURE PIPE AND FITTINGS IN ACCORDANCE WITH SAWS CONSTRUCTION CRITERIA FOR CONSTRUCTION OF SEWER MAINS IN THE VICINITY OF WATER MAINS.
6. CONTRACTOR SHALL ENSURE THAT MANHOLES OUTSIDE OF PAVED AREAS ARE SET WITH TOP ELEVATIONS 6" ABOVE FINISHED GRADE WITH CONCRETE RING ENCASEMENT.
7. ALL SEWER PIPES SHALL BE 8" PVC (SDR 26), UNLESS OTHERWISE NOTED.
8. CONTRACTOR IS TO VERIFY EXISTING INVERT OF EXISTING SANITARY SEWER MAINS AND ALERT ENGINEER IMMEDIATELY OF ANY DIFFERENCE FROM INVERT SHOWN ON PLANS.
9. CONTRACTOR SHALL PROTECT ALL EXISTING FENCES. ANY FENCE DAMAGED BY THE CONTRACTOR SHALL BE REPAIRED BY THE CONTRACTOR AT THEIR EXPENSE.
10. THE CONTRACTOR WILL BE RESPONSIBLE FOR DETERMINING EXACT LOCATION OF ALL UTILITIES AND DRAINAGE STRUCTURES WHETHER SHOWN ON THE PLANS OR NOT. THE CONTRACTOR SHALL UNCOVER EXISTING UTILITIES PRIOR TO CONSTRUCTION TO VERIFY SIZE, GRADE, AND LOCATION. THE CONTRACTOR SHALL NOTIFY THE ENGINEER IMMEDIATELY OF ANY DEVIATIONS FROM PLANS PRIOR TO BEGINNING CONSTRUCTION. ANY DAMAGE TO EXISTING UTILITIES, WHETHER SHOWN ON THE PLANS OR NOT, SHALL BE THE CONTRACTOR'S RESPONSIBILITY TO REPAIR, AT HIS EXPENSE.
11. CONCRETE RING ENCASEMENT TO BE INSTALLED ON ALL MANHOLES AND, WITHIN LIMITS OF PAVEMENT, BE INSTALLED TO THE TOP OF THE BASE LAYER WITH A MINIMUM OF 2" OF ASPHALT ON TOP OF THE RING ENCASEMENT.
12. MANHOLE OPENING INCREASED TO 30" AS PER TAC CHAPTER 217.55.
13. ALL SEWER PIPE LATERALS SHALL BE SDR 26 (CLASS 160) PVC PIPE.
14. IF THE GIVEN TOP OF MANHOLE ELEVATION DOES NOT AGREE ON ACTUAL GROUND SURFACE OR FINISH PAVEMENT, THE CONTRACTOR SHALL ADJUST ELEVATIONS SUCH THAT THE TOP OF MANHOLE SHALL BE 0.5' ABOVE EXISTING GROUND, OR FLUSH TO FINISH ASPHALT PAVEMENT.
15. ALL MANHOLES CONSTRUCTED OVER THE EDWARDS AQUIFER RECHARGE ZONE SHOULD BE WATERTIGHT.

WASTEWATER COLLECTION LOWER
WASTEWATER TREATMENT DOS RIOS/LEON CREEK

DEVELOPER'S NAME: K.B. HOME LONE STAR, INC.
ADDRESS: 4800 FREDERICKSBURG RD
CITY: SAN ANTONIO STATE: TEXAS ZIP: 78229
PHONE# (210) 301-2886 FAX# (210) 366-2378
SAWS BLOCK MAP# 190562 TOTAL EDU'S 120 TOTAL ACREAGE 20.67
TOTAL LINEAR FOOTAGE OF PIPE: 2562 8"SS PLAT NO. 22-11800121
NUMBER OF LOTS 120 SAWS JOB NO. 22-1628

NO.	REVISION	DATE

9/22/2022

STATE OF TEXAS
REBECCA ANN CARROLL
92666
LICENSED
PROFESSIONAL ENGINEER

PAPE-DAWSON ENGINEERS
SAN ANTONIO I AUSTIN I HOUSTON I FORT WORTH I DALLAS
2000 NW LOOP 410 I SAN ANTONIO, TX 78213 I 210.375.9000
TEXAS ENGINEERING FIRM #470 I TEXAS SURVEYING FIRM #10028800

SPANISH TRAILS-UNIT 2 EAST

SAN ANTONIO, TEXAS

SANITARY SEWER NOTES

PLAT NO. 22-11800121
JOB NO. 12044-05
DATE SEPTEMBER 2022
DESIGNER ABC
CHECKED DRAWN AC
SHEET C4.10

Date: Sep 22, 2022, 9:48am User ID: jrodriguez
File: P:\120\44\05\Design\Civil\SN120440S.dwg

THIS DOCUMENT HAS BEEN PRODUCED FROM MATERIAL THAT WAS STORED AND/OR TRANSMITTED ELECTRONICALLY AND MAY HAVE BEEN INADVERTENTLY ALTERED. RELY ONLY ON FINAL HARDCOPY MATERIALS BEARING THE CONSULTANT'S ORIGINAL SIGNATURE AND SEAL. AERIAL IMAGERY PROVIDED BY GOOGLE© UNLESS OTHERWISE NOTED. Imagery © 2016,CAPCOG,Digital Globe,Texas OrthoImagery Program, USDA Farm Service Agency.

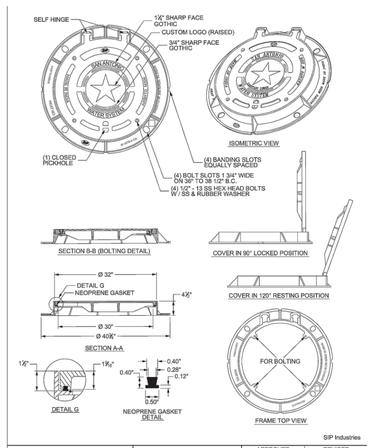

SIP Industries

PROPERTY OF		APPROVED	REVISED
SAN ANTONIO WATER SYSTEM SAN ANTONIO, TEXAS	30" MANHOLE RING AND COVER DETAIL		AUG 2019
		DD 852-07	SHEET 1 OF 5

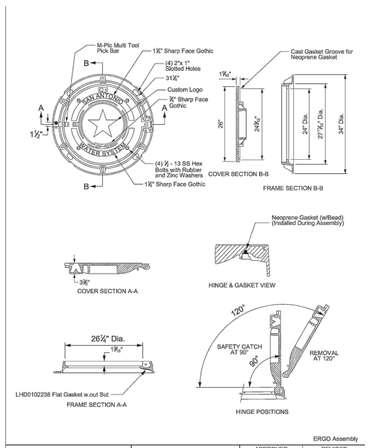

ERGO Assembly

PROPERTY OF		APPROVED	REVISED
SAN ANTONIO WATER SYSTEM SAN ANTONIO, TEXAS	MANHOLE RING AND COVER DETAIL	MARCH 2008	AUG 2019
		DD 852-07	SHEET 2 OF 5

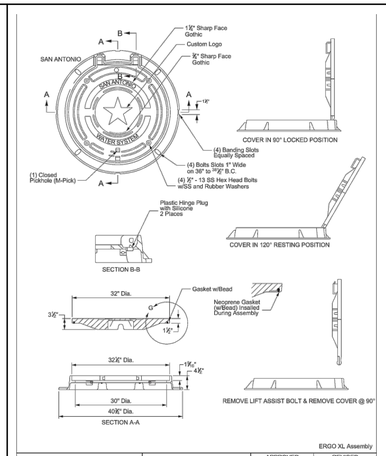

ERGO XL Assembly

PROPERTY OF		APPROVED	REVISED
SAN ANTONIO WATER SYSTEM SAN ANTONIO, TEXAS	MANHOLE RING AND COVER DETAIL	MARCH 2008	AUG 2019
		DD 852-07	SHEET 3 OF 5

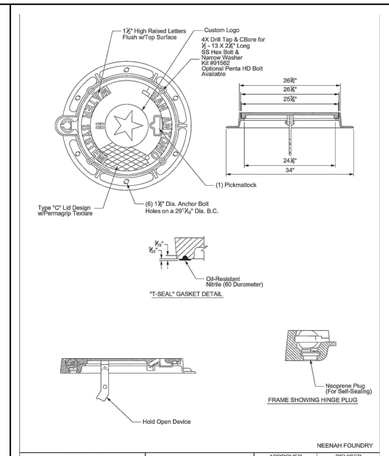

NEENAH FOUNDRY

PROPERTY OF		APPROVED	REVISED
SAN ANTONIO WATER SYSTEM SAN ANTONIO, TEXAS	MANHOLE RING AND COVER DETAIL	MARCH 2008	AUG 2019
		DD 852-07	SHEET 4 OF 5

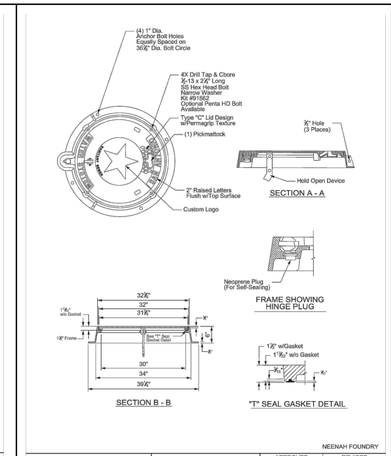

NEENAH FOUNDRY

PROPERTY OF		APPROVED	REVISED
SAN ANTONIO WATER SYSTEM SAN ANTONIO, TEXAS	MANHOLE RING AND COVER DETAIL	MARCH 2008	AUG 2019
		DD 852-07	SHEET 5 OF 5

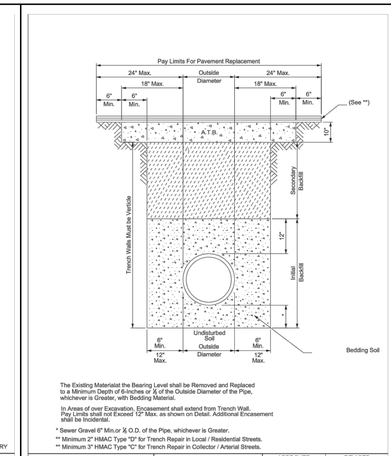

The Existing Materialat the Bearing Level shall be Removed and Replaced to a Minimum Depth of 6-Inches or 1/6 of the Outside Diameter of the Pipe, whichever is Greater, with Bedding Material.

In Areas of over Excavation, Encasement shall extend from Trench Wall. Pay Limits shall not Exceed 12" Max. as shown on Detail. Additional Encasement shall be Incidental.

* Sewer Gravel 6" Min.or 1/6 O.D. of the Pipe, whichever is Greater.
** Minimum 2" HMAC Type "D" for Trench Repair in Local / Residential Streets.
** Minimum 3" HMAC Type "C" for Trench Repair in Collector / Arterial Streets.

PROPERTY OF		APPROVED	REVISED
SAN ANTONIO WATER SYSTEM SAN ANTONIO, TEXAS	SANITARY SEWER PIPE LAID IN TRENCH	MARCH 2008	DEC 2018
		DD-804-01	SHEET 1 OF 1

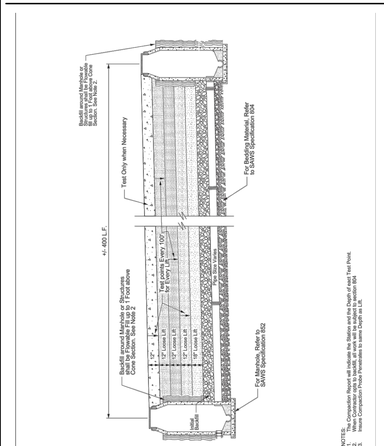

PROPERTY OF		APPROVED	REVISED
SAN ANTONIO WATER SYSTEM SAN ANTONIO, TEXAS	TRENCH COMPACTION DETAIL	MARCH 2018	DEC 2018
		DD 804-02	SHEET 1 OF 1

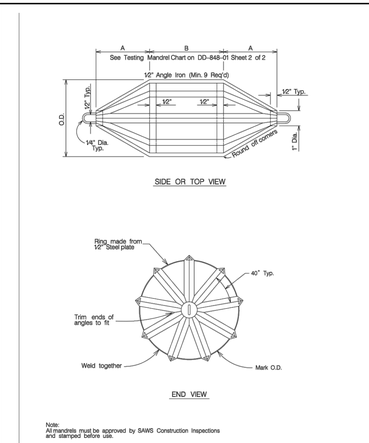

Size	A	B*	MANDREL O.D. PVC (SDR-26)	RING O.D. PVC (SDR-26)
6"	4.0"	4.5"	5.50	4.79
8"	5.5"	6"	7.37	6.66
10"	7.0"	7.5"	9.21	8.50
12"	8.0"	9"	10.96	10.25
15"	10.0"	11"	13.42	12.71
18"	12.0"	13.5"	——	——
21"	14.0"	16"	——	——
24"	16.0"	18"	——	——
27"	18.0"	20"	——	——

* Minimum Length

CHART

Note:
All mandrels must be approved by SAWS Construction Inspections and stamped before use.

PROPERTY OF		APPROVED	REVISED
SAN ANTONIO WATER SYSTEM SAN ANTONIO, TEXAS	GO, NO GO DEFLECTION TESTING MANDREL	March 2008	
		DD-848-01	SHEET 1 OF 2

Notes:
PVC pipes and fittings 6" to 15" in diameter shall conform to ASTM D-3034-08.
PVC pipes and fittings 18" to 27" in diameter shall conform to ASTM F-679-08.

This information is provided as a reference. All deflection testing shall be done in accordance with TCEQ Chapter 217.

PROPERTY OF		APPROVED	REVISED
SAN ANTONIO WATER SYSTEM SAN ANTONIO, TEXAS	GO, NO GO DEFLECTION TESTING MANDREL CHART	MARCH 2008	APRIL 2014
		DD-848-01	SHEET 2 OF 2

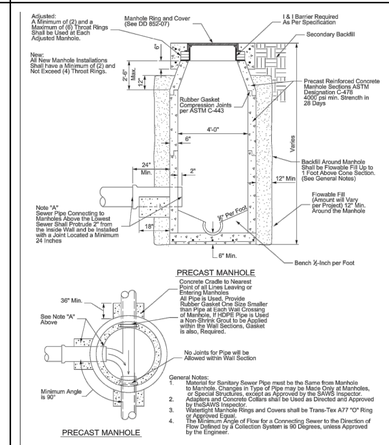

PROPERTY OF		APPROVED	REVISED
SAN ANTONIO WATER SYSTEM SAN ANTONIO, TEXAS	STANDARD PRECAST MANHOLE	MAY 2013	AUG 2019
		DD-852-01	SHEET 1 OF 2

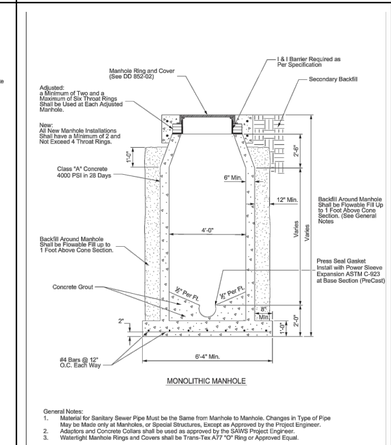

General Notes:
1. Material for Sanitary Sewer Pipe Must be the Same from Manhole to Manhole, Changes in Type of Pipe May be Made only at Manholes, or Special Structures, Except as Approved by the Project Engineer.
2. Adaptors and Concrete Collars shall be used as approved by the SAWS Project Engineer.
3. Watertight Manhole Rings and Covers shall be Trans-Tex A77 "O" Ring or Approved Equal.

PROPERTY OF		APPROVED	REVISED
SAN ANTONIO WATER SYSTEM SAN ANTONIO, TEXAS	STANDARD MONOLITHIC MANHOLE	March 2008	AUG 2019
		DD 852-01	SHEET 2 OF 2

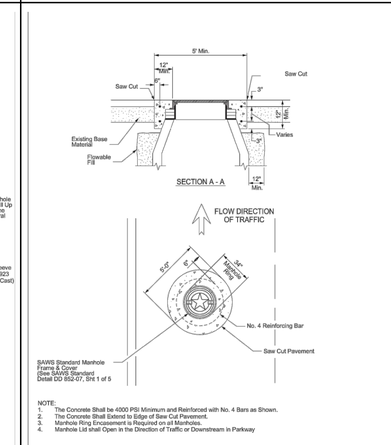

NOTE:
1. The Concrete Shall be 4000 PSI Minimum and Reinforced with No. 4 Bars as Shown.
2. The Concrete Shall Extend to Edge of Saw Cut Pavement.
3. Manhole Ring Encasement is Required on all Manholes.
4. Manhole Lid shall Open in the Direction of Traffic or Downstream in Parkway

PROPERTY OF		APPROVED	REVISED
SAN ANTONIO WATER SYSTEM SAN ANTONIO, TEXAS	MANHOLE RING ENCASEMENT DETAIL	AUGUST 2009	AUG 2019
		DD 852-03	SHEET 1 OF 2

Depth and grade of service laterals as shown, are typical only. Actual depth, alignment and grade of service laterals shall be determined by the Engineer based on the elevations of the sewer main, street, natural ground and building to be serviced.

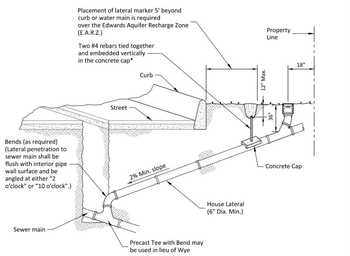

HOUSE LATERAL DETAIL

Note:
A minimum of 3' of cover to subgrade is necessary, otherwise concrete encasement will be required.

PROPERTY OF		APPROVED	REVISED
SAN ANTONIO WATER SYSTEM SAN ANTONIO, TEXAS	HOUSE LATERAL DETAIL (IN THE E.A.R.Z.)	March 2008	December 2018
		DD-854-EARZ	SHEET 1 OF 1

LATERAL CONNECTION TO EXISTING SEWER MAIN

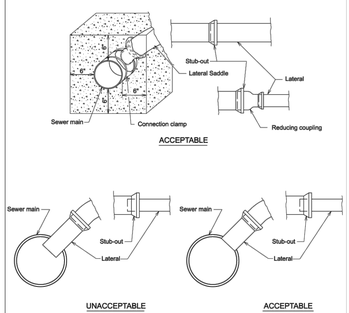

Note:
The saddle shall be permanently bonded to the existing main by the use of compounds or or clamps as recommended by the manufacturer.

PROPERTY OF		APPROVED	REVISED
SAN ANTONIO WATER SYSTEM SAN ANTONIO, TEXAS	LATERAL CONNECTION	MARCH 2008	APRIL 2014
		DD-854-03	SHEET 1 OF 1

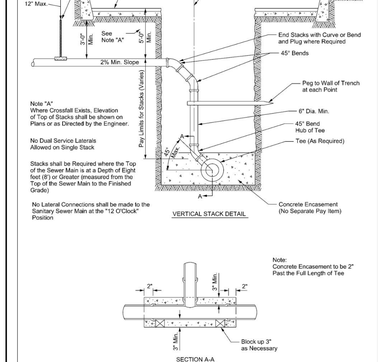

PROPERTY OF		APPROVED	REVISED
SAN ANTONIO WATER SYSTEM SAN ANTONIO, TEXAS	TYPICAL VERTICAL STACK DETAIL	MARCH 2008	AUG 2019
		DD 860-01	SHEET 1 OF 1

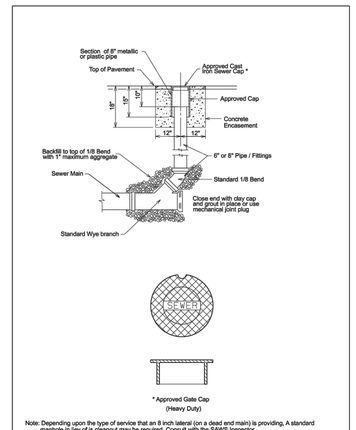

Note: Depending upon the type of service that an 8 inch lateral (on a dead end main) is providing, A standard manhole in lieu of a cleanout may be required. Consult with the SAWS Inspector.

PROPERTY OF		APPROVED	REVISED
SAN ANTONIO WATER SYSTEM SAN ANTONIO, TEXAS	TYPICAL 6" OR 8" CLEANOUT DETAIL (ON DEAD-END MAIN)	MARCH 2008	APRIL 2014
		DD-854-02	SHEET 1 OF 2

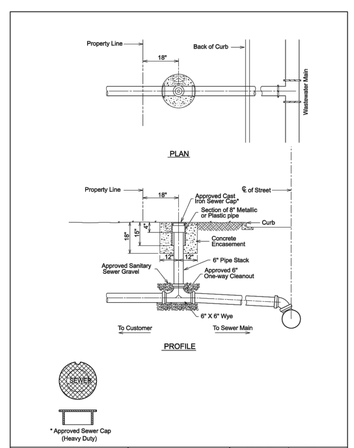

PROPERTY OF		APPROVED	REVISED
SAN ANTONIO WATER SYSTEM SAN ANTONIO, TEXAS	TYPICAL CLEANOUT DETAIL	MARCH 2008	APRIL 2014
		DD-854-02	SHEET 2 OF 2

WASTEWATER COLLECTION LOWER
WASTEWATER TREATMENT DOS RIOS/LEON CREEK

DEVELOPER'S NAME: K.B. HOME LONE STAR, INC.
ADDRESS: 4800 FREDERICKSBURG RD
CITY: SAN ANTONIO STATE: TEXAS ZIP: 78229
PHONE# (210) 301-2886 FAX# (210) 366-2378
SAWS BLOCK MAP# 190562 TOTAL EDU'S 120 TOTAL ACREAGE 20.67
TOTAL LINEAR FOOTAGE OF PIPE: 2562 8"SS PLAT NO. 22-11800121
NUMBER OF LOTS 120 SAWS JOB NO. 22-1628

NO.	REVISION	DATE

9/22/2022

STATE OF TEXAS
REBECCA ANN CARROLL
92666
LICENSED
PROFESSIONAL ENGINEER

PAPE-DAWSON ENGINEERS
SAN ANTONIO I AUSTIN I HOUSTON I FORT WORTH I DALLAS
2000 NW LOOP 410 I SAN ANTONIO, TX 78213 I 210.375.9000
TEXAS ENGINEERING FIRM #470 I TEXAS SURVEYING FIRM #10028800

SPANISH TRAILS-UNIT 2 EAST
SAN ANTONIO, TEXAS
SANITARY SEWER DETAILS

PLAT NO. 22-11800121
JOB NO. 12044-05
DATE SEPTEMBER 2022
DESIGNER ABC
CHECKED ____ DRAWN AC
SHEET C4.20

Date: Sep 22, 2022, 9:49am User ID: irodriguez
File: P:\120\44\05\Design\Civil\SSD\T1204405.dwg

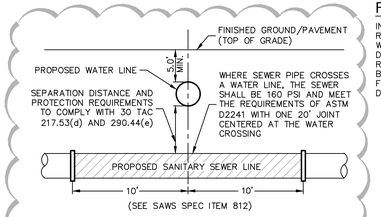

TYPICAL SANITARY SEWER/WATER CROSSING DETAIL

NOT-TO-SCALE

FIRE FLOW NOTE:

IN AN EFFORT TO MEET THE CITY OF SAN ANTONIO'S FIRE FLOW REQUIREMENTS FOR THE PROPOSED RESIDENTIAL DEVELOPMENT, THE PUBLIC WATER MAIN SYSTEM HAS BEEN DESIGNED FOR A MINIMUM FIRE FLOW DEMAND OF 1000 GPM AT 25 PSI RESIDUAL PRESSURE. THE FIRE FLOW REQUIREMENTS FOR INDIVIDUAL STRUCTURES WILL BE REVIEWED DURING THE BUILDING PERMIT PROCESS IN ACCORDANCE WITH THE PROCEDURES SET FORTH BY THE CITY OF SAN ANTONIO DIRECTOR OF DEVELOPMENT SERVICES DEPARTMENT AND THE SAN ANTONIO FIRE DEPARTMENT FIRE MARSHAL.

LOCATION MAP

NOT-TO-SCALE

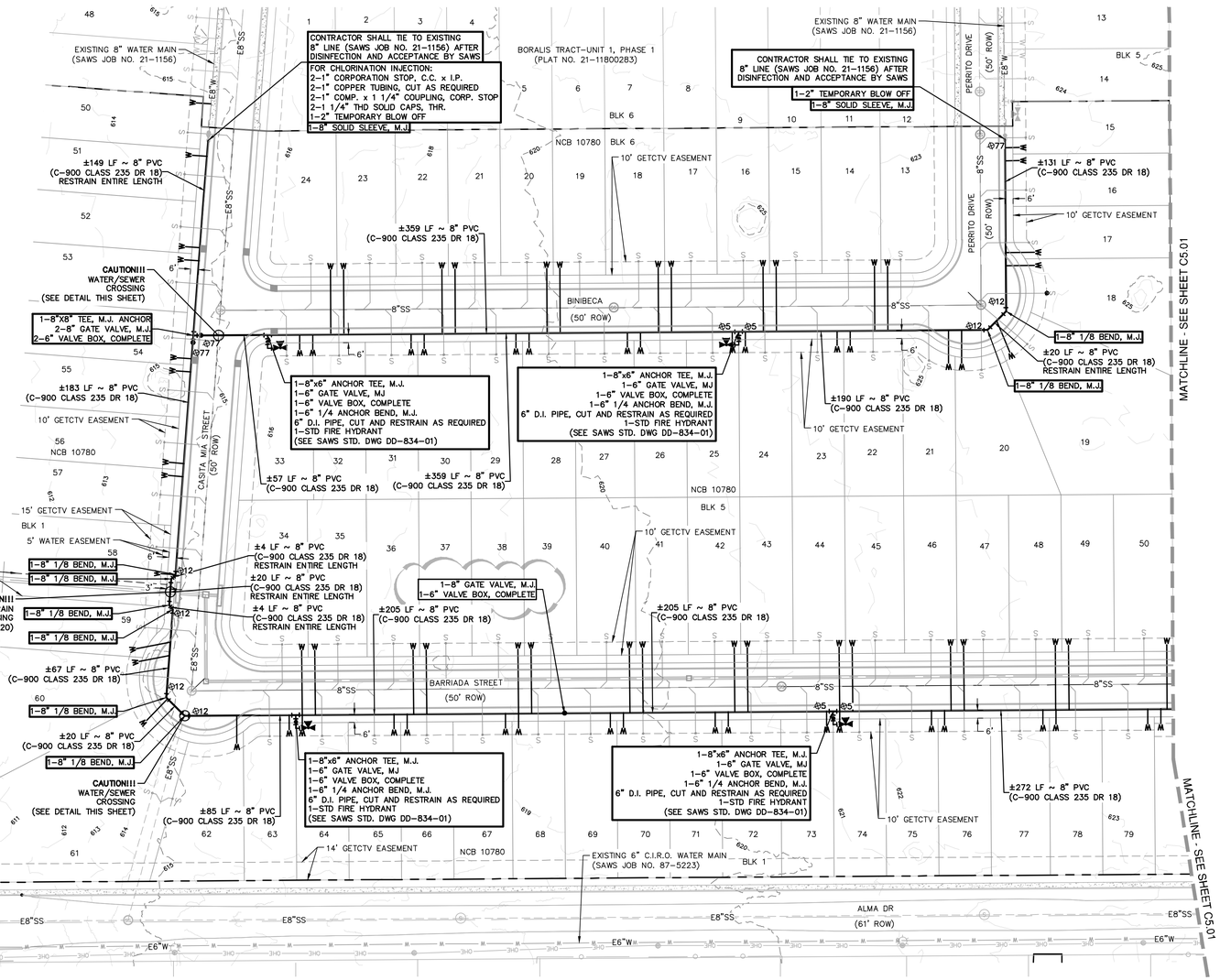

WATER LEGEND

PROJECT LIMITS	
EXISTING WATER	FIRE HYDRANT W
EXISTING SEWER	SS
PROPOSED SEWER	SS MANHOLE
PROPOSED WATER	FIRE HYDRANT W
PROPOSED 3/4" SINGLE SERVICE WITH 5/8" METER	
JOINT RESTRAINT	

PRESSURE REDUCING VALVE NOTE:

PRESSURE REDUCING VALVE TO BE INSTALLED ON CUSTOMER'S SIDE OF METER BY HOMEBUILDER.

PRESSURE NOTE:

CONTRACTOR TO VERIFY THAT NO PORTION OF THE TRACT IS BELOW GROUND ELEVATION OF 643 FEET WHERE THE STATIC PRESSURE WILL NORMALLY EXCEED 80 PSI. AT ALL SUCH LOCATIONS WHERE THE GROUND LEVEL IS BELOW 643 FEET, THE DEVELOPER OR BUILDER SHALL INSTALL AT EACH LOT, ON THE CUSTOMER'S SIDE OF THE METER, AN APPROVED TYPE PRESSURE REGULATOR IN CONFORMANCE WITH THE PLUMBING CODE OF THE CITY OF SAN ANTONIO. NO DUAL SERVICES ALLOWED FOR ANY LOT(S) IF *PRV IS/ARE REQUIRED FOR SUCH LOT(S), ONLY SINGLE SERVICE CONNECTIONS SHALL BE ALLOWED.
*NOTE: A PRESSURE REGULATOR IS ALSO KNOWN AS A PRESSURE REDUCING VALVE (PRV).

JOINT RESTRAINT NOTE:

CONTRACTOR SHALL INSTALL RETAINER GLANDS AT ALL FITTINGS AND PROVIDE JOINT RESTRAINING HARNESSES OR FIELD LOCK GASKETS AT ALL JOINTS WITHIN THE LENGTH SHOWN. CONTRACTOR SHALL INSURE THAT ALL TEES, BENDS, VALVES, ETC. HAVE A MINIMUM OF 5 FT OF PIPE WITH NO JOINTS ON EACH SIDE OF THE FITTING. JOINT RESTRAINTS AND RETAINER GLANDS SHALL BE CALCULATED BY SAWS APPROVED PROGRAMS. THERE WILL BE NO SEPARATE PAY ITEM FOR RETAINER GLANDS AND OTHER JOINT RESTRAINING HARNESSES AND GASKETS, BUT SHALL BE SUBSIDIARY TO THE UNIT COST PER LINEAL FOOT OF PIPE INSTALLED.

TRENCH EXCAVATION SAFETY PROTECTION:

CONTRACTOR AND/ OR CONTRACTOR'S INDEPENDENTLY RETAINED EMPLOYEE OR STRUCTURAL DESIGN/ GEOTECHNICAL/ SAFETY/EQUIPMENT CONSULTANT, IF ANY, SHALL REVIEW THESE PLANS AND ANY AVAILABLE GEOTECHNICAL INFORMATION AND THE ANTICIPATED INSTALLATION SITES WITHIN THE PROJECT WORK AREA IN ORDER TO IMPLEMENT CONTRACTOR'S TRENCH EXCAVATION SAFETY PROTECTION SYSTEMS, PROGRAMS AND /OR PROCEDURES FOR THE PROJECT DESCRIBED IN THE CONTRACT DOCUMENTS. THE CONTRACTOR'S IMPLEMENTATION OF THESE SYSTEMS, PROGRAMS AND/OR PROCEDURES SHALL PROVIDE FOR ADEQUATE TRENCH EXCAVATION SAFETY PROTECTION THAT COMPLY WITH AS A MINIMUM, OSHA STANDARDS FOR TRENCH EXCAVATIONS. SPECIFICALLY, CONTRACTOR AND/OR CONTRACTOR'S INDEPENDENTLY RETAINED EMPLOYEE OR SAFETY CONSULTANT SHALL IMPLEMENT A TRENCH SAFETY PROGRAM IN ACCORDANCE WITH OSHA STANDARDS GOVERNING THE PRESENCE AND ACTIVITIES OF INDIVIDUALS WORKING IN AND AROUND TRENCH EXCAVATION.

WATER (SAWS PRESSURE ZONE 828)

DEVELOPER'S NAME: K.B. HOME LONE STAR, INC.
ADDRESS: 4800 FREDERICKSBURG RD
CITY: SAN ANTONIO STATE: TEXAS ZIP: 78229
PHONE# (210) 301-2886 FAX# (210) 366-2378
SAWS BLOCK MAP# 190562 TOTAL EDU'S 120 TOTAL ACREAGE 20.67
TOTAL LINEAR FOOTAGE OF PIPE: 3304 8"W PLAT NO. 22-11800121
NUMBER OF LOTS 120 SAWS JOB NO. 22-1134

NO.	REVISION	DATE
1.	SAWS COMMENTS.	9/22/2022
	ADDED WATER VALVE.	

9/22/2022

STATE OF TEXAS
REBECCA ANN CARROLL
92666
LICENSED
PROFESSIONAL ENGINEER

PAPE-DAWSON ENGINEERS
SAN ANTONIO I AUSTIN I HOUSTON I FORT WORTH I DALLAS
2000 NW LOOP 410 I SAN ANTONIO, TX 78213 I 210.375.9000
TEXAS ENGINEERING FIRM #470 I TEXAS SURVEYING FIRM #10028800

SPANISH TRAILS-UNIT 2 EAST

SAN ANTONIO, TEXAS

OVERALL WATER DISTRIBUTION PLAN
SHEET 1 OF 2

PHASE 2B

PLAT NO. 22-11800121
JOB NO. 12044-05
DATE SEPTEMBER 2022
DESIGNER ABC
CHECKED ____ DRAWN AC
SHEET C5.00

Date: Sep 22, 2022, 10:36am User ID: icodriguez
File: P:\120\44\05\Design\Civil\DW120440S.dwg

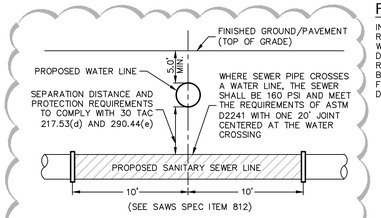

TYPICAL SANITARY SEWER/WATER CROSSING DETAIL

NOT-TO-SCALE

FIRE FLOW NOTE:

IN AN EFFORT TO MEET THE CITY OF SAN ANTONIO'S FIRE FLOW REQUIREMENTS FOR THE PROPOSED RESIDENTIAL DEVELOPMENT, THE PUBLIC WATER MAIN SYSTEM HAS BEEN DESIGNED FOR A MINIMUM FIRE FLOW DEMAND OF 1000 GPM AT 25 PSI RESIDUAL PRESSURE. THE FIRE FLOW REQUIREMENTS FOR INDIVIDUAL STRUCTURES WILL BE REVIEWED DURING THE BUILDING PERMIT PROCESS IN ACCORDANCE WITH THE PROCEDURES SET FORTH BY THE CITY OF SAN ANTONIO DIRECTOR OF DEVELOPMENT SERVICES DEPARTMENT AND THE SAN ANTONIO FIRE DEPARTMENT FIRE MARSHAL.

LOCATION MAP

NOT-TO-SCALE

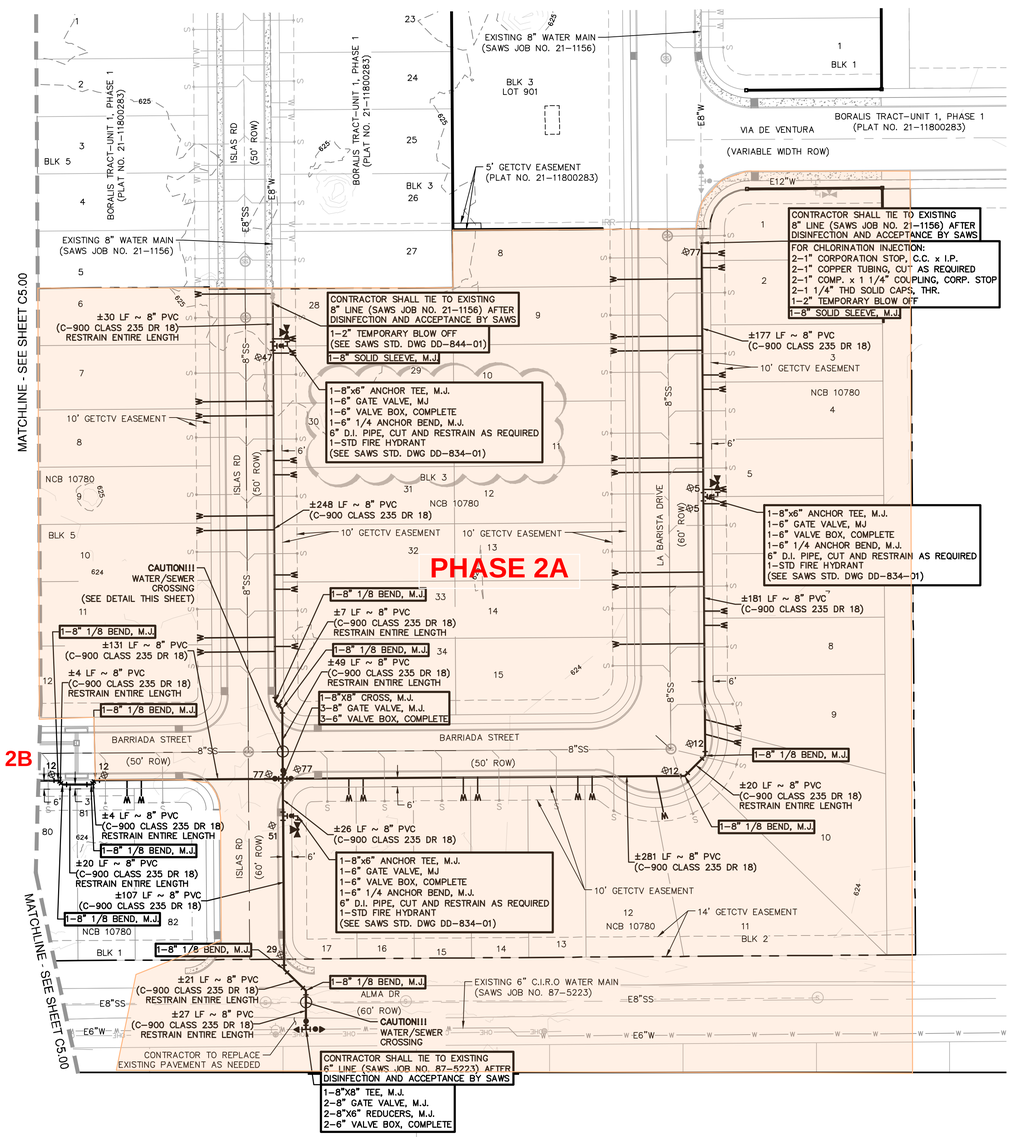

WATER LEGEND

PROJECT LIMITS	
EXISTING WATER	FIRE HYDRANT W
EXISTING SEWER	SS MANHOLE
PROPOSED SEWER	SS
PROPOSED WATER	FIRE HYDRANT W
PROPOSED 3/4" SINGLE SERVICE WITH 5/8" METER	
JOINT RESTRAINT	

PRESSURE REDUCING VALVE NOTE:

PRESSURE REDUCING VALVE TO BE INSTALLED ON CUSTOMER'S SIDE OF METER BY HOMEBUILDER.

PRESSURE NOTE:

CONTRACTOR TO VERIFY THAT NO PORTION OF THE TRACT IS BELOW GROUND ELEVATION OF 643 FEET WHERE THE STATIC PRESSURE WILL NORMALLY EXCEED 80 PSI. AT ALL SUCH LOCATIONS WHERE THE GROUND LEVEL IS BELOW 643 FEET, THE DEVELOPER OR BUILDER SHALL INSTALL AT EACH LOT, ON THE CUSTOMER'S SIDE OF THE METER, AN APPROVED TYPE PRESSURE REGULATOR IN CONFORMANCE WITH THE PLUMBING CODE OF THE CITY OF SAN ANTONIO. NO DUAL SERVICES ALLOWED FOR ANY LOT(S) IF *PRV IS/ARE REQUIRED FOR SUCH LOT(S), ONLY SINGLE SERVICE CONNECTIONS SHALL BE ALLOWED.
*NOTE: A PRESSURE REGULATOR IS ALSO KNOWN AS A PRESSURE REDUCING VALVE (PRV).

JOINT RESTRAINT NOTE:

CONTRACTOR SHALL INSTALL RETAINER GLANDS AT ALL FITTINGS AND PROVIDE JOINT RESTRAINING HARNESSES OR FIELD LOCK GASKETS AT ALL JOINTS WITHIN THE LENGTH SHOWN. CONTRACTOR SHALL INSURE THAT ALL TEES, BENDS, VALVES, ETC. HAVE A MINIMUM OF 5 FT OF PIPE WITH NO JOINTS ON EACH SIDE OF THE FITTING. JOINT RESTRAINTS AND RETAINER GLANDS SHALL BE CALCULATED BY SAWS APPROVED PROGRAMS. THERE WILL BE NO SEPARATE PAY ITEM FOR RETAINER GLANDS AND OTHER JOINT RESTRAINING HARNESSES AND GASKETS, BUT SHALL BE SUBSIDIARY TO THE UNIT COST PER LINEAL FOOT OF PIPE INSTALLED.

TRENCH EXCAVATION SAFETY PROTECTION:

CONTRACTOR AND/ OR CONTRACTOR'S INDEPENDENTLY RETAINED EMPLOYEE OR STRUCTURAL DESIGN/ GEOTECHNICAL/ SAFETY/EQUIPMENT CONSULTANT, IF ANY, SHALL REVIEW THESE PLANS AND ANY AVAILABLE GEOTECHNICAL INFORMATION AND THE ANTICIPATED INSTALLATION SITES WITHIN THE PROJECT WORK AREA IN ORDER TO IMPLEMENT CONTRACTOR'S TRENCH EXCAVATION SAFETY PROTECTION SYSTEMS, PROGRAMS AND /OR PROCEDURES FOR THE PROJECT DESCRIBED IN THE CONTRACT DOCUMENTS. THE CONTRACTOR'S IMPLEMENTATION OF THESE SYSTEMS, PROGRAMS AND/OR PROCEDURES SHALL PROVIDE FOR ADEQUATE TRENCH EXCAVATION SAFETY PROTECTION THAT COMPLY WITH AS A MINIMUM, OSHA STANDARDS FOR TRENCH EXCAVATIONS. SPECIFICALLY, CONTRACTOR AND/OR CONTRACTOR'S INDEPENDENTLY RETAINED EMPLOYEE OR SAFETY CONSULTANT SHALL IMPLEMENT A TRENCH SAFETY PROGRAM IN ACCORDANCE WITH OSHA STANDARDS GOVERNING THE PRESENCE AND ACTIVITIES OF INDIVIDUALS WORKING IN AND AROUND TRENCH EXCAVATION.

WATER (SAWS PRESSURE ZONE 828)

DEVELOPER'S NAME: K.B. HOME LONE STAR, INC.
ADDRESS: 4800 FREDERICKSBURG RD
CITY: SAN ANTONIO STATE: TEXAS ZIP: 78229
PHONE# (210) 301-2886 FAX# (210) 366-2378
SAWS BLOCK MAP# 190562 TOTAL EDU'S 120 TOTAL ACREAGE 20.67
TOTAL LINEAR FOOTAGE OF PIPE: 3304 8"W PLAT NO. 22-11800121
NUMBER OF LOTS 120 SAWS JOB NO. 22-1134

NO.	REVISION	DATE
1.	SAWS COMMENTS.	9/22/2022
	MISSING HYDRANT LABEL.	

9/22/2022

STATE OF TEXAS
REBECCA ANN CARROLL
92666
LICENSED
PROFESSIONAL ENGINEER

PAPE-DAWSON ENGINEERS
SAN ANTONIO I AUSTIN I HOUSTON I FORT WORTH I DALLAS
2000 NW LOOP 410 I SAN ANTONIO, TX 78213 I 210.375.9000
TEXAS ENGINEERING FIRM #470 I TEXAS SURVEYING FIRM #10028800

SPANISH TRAILS-UNIT 2 EAST

SAN ANTONIO, TEXAS

OVERALL WATER DISTRIBUTION PLAN
SHEET 2 OF 2

PHASE 2A

PLAT NO. 22-11800121
JOB NO. 12044-05
DATE SEPTEMBER 2022
DESIGNER ABC
CHECKED DRAWN AC
SHEET C5.01

Date: Sep 22, 2022, 10:39am User ID: irodriguez
File: P:\120\44\05\Design\Civil\OW\204405.dwg

THIS DOCUMENT HAS BEEN PRODUCED FROM MATERIAL THAT WAS STORED AND/OR TRANSMITTED ELECTRONICALLY AND MAY HAVE BEEN INADVERTENTLY ALTERED. RELY ONLY ON FINAL HARDCOPY MATERIALS BEARING THE CONSULTANT'S ORIGINAL SIGNATURE AND SEAL. AERIAL IMAGERY PROVIDED BY GOOGLE© UNLESS OTHERWISE NOTED. Imagery © 2016,CAPCOG,Digital Globe,Texas OrthoImagery Program, USDA Farm Service Agency.

SAWS CONSTRUCTION NOTES

(LAST REVISED JULY 2017)

SAWS GENERAL SECTION

1. ALL MATERIALS AND CONSTRUCTION PROCEDURES WITHIN THE SCOPE OF THIS CONTRACT SHALL BE APPROVED BY THE SAN ANTONIO WATER SYSTEM (SAWS) AND COMPLY WITH THE PLANS, SPECIFICATIONS, GENERAL CONDITIONS AND WITH THE FOLLOWING AS APPLICABLE:

   A. CURRENT TEXAS COMMISSION ON ENVIRONMENTAL QUALITY (TCEQ) "DESIGN CRITERIA FOR DOMESTIC WASTEWATER SYSTEM"; TEXAS ADMINISTRATIVE CODE (TAC) TITLE 30 PART 1 CHAPTER 217 AND "PUBLIC DRINKING WATER"; TAC TITLE 30 PART 1 CHAPTER 290.
   B. CURRENT TXDOT "STANDARD SPECIFICATIONS FOR CONSTRUCTION OF HIGHWAYS, STREETS AND DRAINAGE".
   C. CURRENT "SAN ANTONIO WATER SYSTEM STANDARD SPECIFICATIONS FOR WATER AND SANITARY SEWER CONSTRUCTION".
   D. CURRENT CITY OF SAN ANTONIO "STANDARD SPECIFICATIONS FOR PUBLIC WORKS CONSTRUCTION".
   E. CURRENT CITY OF SAN ANTONIO "UTILITY EXCAVATION CRITERIA MANUAL" (UECM).

2. THE CONTRACTOR SHALL NOT PROCEED WITH ANY PIPE INSTALLATION WORK UNTIL THEY OBTAIN A COPY OF THE APPROVED COUNTER PERMIT OR GENERAL CONSTRUCTION PERMIT (GCP) FROM THE CONSULTANT AND HAS BEEN NOTIFIED BY SAWS CONSTRUCTION INSPECTION DIVISION TO PROCEED WITH THE WORK AND HAS ARRANGED A MEETING WITH THE INSPECTOR AND CONSULTANT FOR THE WORK REQUIREMENTS. WORK COMPLETED BY THE CONTRACTOR WITHOUT AN APPROVED COUNTER PERMIT AND/OR A GCP WILL BE SUBJECT TO REMOVAL AND REPLACEMENT AT THE EXPENSE OF THE CONTRACTORS AND/OR THE DEVELOPER.

3. THE CONTRACTOR SHALL OBTAIN THE SAWS STANDARD DETAILS FROM THE SAWS WEBSITE, HTTP://WWW.SAWS.ORG/BUSINESS_CENTER/SPECS. UNLESS OTHERWISE NOTED WITHIN THE DESIGN PLANS.

4. THE CONTRACTOR IS TO MAKE ARRANGEMENTS WITH THE SAWS CONSTRUCTION INSPECTION DIVISION AT (210) 233-2973, ON NOTIFICATION PROCEDURES THAT WILL BE USED TO NOTIFY AFFECTED HOME RESIDENTS AND/OR PROPERTY OWNERS 48 HOURS PRIOR TO BEGINNING ANY WORK.

5. LOCATION AND DEPTH OF EXISTING UTILITIES AND SERVICE LATERALS SHOWN ON THE PLANS ARE UNDERSTOOD TO BE APPROXIMATE. ACTUAL LOCATIONS AND DEPTHS MUST BE FIELD VERIFIED BY THE CONTRACTOR AT LEAST 1 WEEK PRIOR TO CONSTRUCTION. IT SHALL BE THE CONTRACTOR'S RESPONSIBILITY TO LOCATE UTILITY SERVICE LINES AS REQUIRED FOR CONSTRUCTION AND TO PROTECT THEM DURING CONSTRUCTION AT NO COST TO SAWS.

6. THE CONTRACTOR SHALL VERIFY THE EXACT LOCATION OF UNDERGROUND UTILITIES AND DRAINAGE STRUCTURES AT LEAST 1-2 WEEKS PRIOR TO CONSTRUCTION WHETHER SHOWN ON PLANS OR NOT. PLEASE ALLOW UP TO 7 BUSINESS DAYS FOR LOCATES. REQUESTING PIPE LOCATION MARKERS ON SAWS FACILITIES. THE FOLLOWING CONTACT INFORMATION ARE SUPPLIED FOR VERIFICATION PURPOSES:

   - SAWS UTILITY LOCATES: HTTP://WWW.SAWS.ORG/SERVICE/LOCATES
   - COSA DRAINAGE (210) 207-0724 OR (210) 207-6026
   - COSA TRAFFIC SIGNAL OPERATIONS (210) 206-8480
   - COSA TRAFFIC SIGNAL DAMAGES (210) 207-3951
   - TEXAS STATE WIDE ONE CALL LOCATOR 1-800-545-6005 OR 811

7. THE CONTRACTOR SHALL BE RESPONSIBLE FOR RESTORING EXISTING FENCES, CURBS, STREETS, DRIVEWAYS, SIDEWALKS, LANDSCAPING AND STRUCTURES TO ITS ORIGINAL OR BETTER CONDITION IF DAMAGES ARE MADE AS A RESULT OF THE PROJECT'S CONSTRUCTION.

8. ALL WORK IN TEXAS DEPARTMENT OF TRANSPORTATION (TXDOT) AND/OR BEXAR COUNTY RIGHT-OF-WAY SHALL BE DONE IN ACCORDANCE WITH RESPECTIVE CONSTRUCTION SPECIFICATIONS AND PERMIT REQUIREMENTS.

9. THE CONTRACTOR SHALL COMPLY WITH CITY OF SAN ANTONIO OR OTHER GOVERNING MUNICIPALITY'S TREE ORDINANCES WHEN EXCAVATING NEAR TREES.

10. THE CONTRACTOR SHALL NOT PLACE ANY WASTE MATERIALS IN THE 100-YEAR FLOOD PLAIN WITHOUT FIRST OBTAINING AN APPROVED FLOOD PLAIN PERMIT.

    HOLIDAY WORK: CONTRACTORS WILL NOT BE ALLOWED TO PERFORM SAWS WORK ON SAWS RECOGNIZED HOLIDAYS. REQUEST SHOULD BE SENT TO CONSTWORKREQ@SAWS.ORG.

    WEEKEND WORK: CONTRACTORS ARE REQUIRED TO NOTIFY THE SAWS INSPECTION CONSTRUCTION DEPARTMENT 48 HOURS IN ADVANCE TO REQUEST WEEKEND WORK. REQUEST SHOULD BE SENT TO CONSTWORKREQ@SAWS.ORG.

11. ANY AND ALL SAWS UTILITY WORK INSTALLED WITHOUT HOLIDAY/WEEKEND APPROVAL WILL BE SUBJECT TO BE UNCOVERED FOR PROPER INSPECTION.

12. COMPACTION NOTE (ITEM 804): THE CONTRACTOR SHALL BE RESPONSIBLE FOR MEETING THE COMPACTION REQUIREMENTS ON ALL TRENCH BACKFILL AND FOR PAYING FOR THE TESTS PERFORMED BY A THIRD PARTY. COMPACTION TESTS WILL BE DONE AT ONE LOCATION POINT RANDOMLY SELECTED, OR AS INDICATED BY THE SAWS INSPECTOR AND/OR THE TEST ADMINISTRATOR. PER EACH 12-INCH LOOSE LIFT PER 400 LINEAR FEET AT A MINIMUM. THIS PROJECT WILL NOT BE ACCEPTED AND FINALIZED BY SAWS WITHOUT THIS REQUIREMENT BEING MET AND VERIFIED BY PROVIDING ALL NECESSARY DOCUMENTED TEST RESULTS.

13. A COPY OF ALL TESTING REPORTS SHALL BE FORWARDED TO SAWS CONSTRUCTION INSPECTION DIVISION.

SAWS WATER NOTES

1. PRIOR TO TIE-INS, ANY SHUTDOWNS OF EXISTING MAINS OF ANY SIZE MUST BE COORDINATED WITH THE SAWS CONSTRUCTION INSPECTION DIVISION AT LEAST ONE WEEK IN ADVANCE OF THE SHUTDOWN. THE CONTRACTOR MUST ALSO PROVIDE A SEQUENCE OF WORK AS RELATED TO THE TIE-INS; THIS IS AT NO ADDITIONAL COST TO SAWS OR THE PROJECT AND IT IS THE RESPONSIBILITY OF THE CONTRACTOR TO SEQUENCE THE WORK ACCORDINGLY.

   - FOR WATER MAINS 12" OR HIGHER: SAWS EMERGENCY OPERATIONS CENTER (210) 233-2014

2. ASBESTOS CEMENT (AC) PIPE, ALSO KNOWN AS TRANSITE PIPE WHICH IS KNOWN TO CONTAIN ASBESTOS- CONTAINING MATERIAL (ACM), MAY BE LOCATED WITHIN THE PROJECT LIMITS. SPECIAL WASTE MANAGEMENT PROCEDURES AND HEALTH AND SAFETY REQUIREMENTS WILL BE APPLICABLE WHEN REMOVAL AND/OR DISTURBANCE OF THIS PIPE OCCURS. SUCH WORK IS TO BE MADE UNDER SPECIAL SPECIFICATION ITEM NO. 3000, "SPECIAL SPECIFICATION FOR HANDLING ASBESTOS CEMENT PIPE".

3. VALVE REMOVAL: WHERE THE CONTRACTOR IS TO ABANDON A WATER MAIN, THE CONTROL VALVE LOCATED ON THE ABANDONING BRANCH WILL BE REMOVED AND REPLACED WITH A CAP/PLUG. (NSPI)

4. SUITABLE ANCHORAGE/THRUST BLOCKING OR JOINT RESTRAINT SHALL BE PROVIDED AT ALL OF THE FOLLOWING MAIN LOCATIONS: DEAD ENDS, PLUGS, CAPS, TEES, CROSSES, VALVES, AND BENDS, IN ACCORDANCE WITH THE STANDARD DRAWINGS DD-839 SERIES AND ITEM NO. 839, IN THE SAWS STANDARD SPECIFICATIONS FOR CONSTRUCTION.

5. ALL VALVES SHALL READ "OPEN RIGHT".

6. PRVS REQUIRED: CONTRACTOR TO VERIFY THAT NO PORTION OF THE TRACT IS BELOW GROUND ELEVATION OF 643 FEET WHERE THE STATIC PRESSURE WILL NORMALLY EXCEED 80 PSI. AT ALL SUCH LOCATIONS WHERE THE GROUND LEVEL IS BELOW 643 FEET, THE DEVELOPER OR BUILDER SHALL INSTALL AT EACH LOT, ON THE CUSTOMER'S SIDE OF THE METER, AN APPROVED TYPE PRESSURE REGULATOR IN CONFORMANCE WITH THE PLUMBING CODE OF THE CITY OF SAN ANTONIO. NO DUAL SERVICES ALLOWED FOR ANY LOT(S) IF *PRV IS/ARE REQUIRED FOR SUCH LOT(S), ONLY SINGLE SERVICE CONNECTIONS SHALL BE ALLOWED. *NOTE: A PRESSURE REGULATOR IS ALSO KNOWN AS A PRESSURE REDUCING VALVE (PRV).

7. PIPE DISINFECTION WITH DRY HTH FOR PROJECTS LESS THAN 800 LINEAR FEET. (ITEM NO. 847.3): MAINS SHALL BE DISINFECTED WITH DRY HTH WHERE SHOWN IN THE CONTRACT DOCUMENTS OR AS DIRECTED BY THE INSPECTOR, AND SHALL NOT EXCEED A TOTAL LENGTH OF 800 FEET. THIS METHOD OF DISINFECTION WILL ALSO BE FOLLOWED FOR MAIN REPAIRS. THE CONTRACTOR SHALL UTILIZE ALL APPROPRIATE SAFETY MEASURE TO PROTECT HIS PERSONNEL DURING DISINFECTION OPERATIONS.

8. BACKFLOW PREVENTION DEVICES:

   - ALL IRRIGATION SERVICES WITHIN RESIDENTIAL AREAS ARE REQUIRED TO HAVE BACKFLOW PREVENTION DEVICES.
   - ALL COMMERCIAL BACKFLOW PREVENTION DEVICES MUST BE APPROVED BY SAWS PRIOR TO INSTALLATION.

9. FINAL CONNECTION TO THE EXISTING WATER MAIN SHALL NOT BE MADE UNTIL THE WATER MAIN HAS BEEN PRESSURE TESTED, CHLORINATED, AND SAWS HAS RELEASED THE MAIN FOR TIE-IN AND USE.

PROJECT WATER NOTES

1. MACHINE CHLORINATION BY THE S.A.W.S.
2. ALL 8", 12" AND 16" PIPE SHALL BE P.V.C. C-900 CLASS 235 DR 18.
3. ALL MAINS SHALL BE HYDROSTATICALLY TESTED BY THE CONTRACTOR, AS PROVIDED FOR IN THE SPECIAL CONDITIONS.
4. THE WATER LINES WILL BE SET FROM THE STREET HUBS BEFORE THIS CONTRACT BEGINS. STREET CUT SHEETS WILL BE SUPPLIED TO THE CONTRACTOR. THERE SHOULD BE NO ADDITIONAL STAKES REQUIRED, AND IT SHALL BE THE CONTRACTOR'S RESPONSIBILITY TO INSPECT THE SITE AND VERIFY THAT ALL STAKES REQUIRED FOR HIS WORK ARE IN PLACE AT THE TIME THE CONSTRUCTION BEGINS. IF ANY STAKES ARE MISSING THE ENGINEER SHOULD BE NOTIFIED IMMEDIATELY. AFTER CONSTRUCTION BEGINS, ALL CONSTRUCTION STAKES, MARKS, ETC., SHALL BE CAREFULLY PRESERVED BY THE CONTRACTOR, AND IN CASE OF DESTRUCTION OR REMOVAL BY THE CONTRACTOR, HIS EMPLOYEE OR ANY OTHER MEANS, SUCH STAKES, MARKS, ETC., SHALL BE REPLACED AT THE CONTRACTOR'S EXPENSE.
5. THE CONTRACTOR SHALL FURNISH THE ENGINEER WITH ALL THE FINAL MEASUREMENTS, TAPS AND LENGTH OF SERVICE CONNECTIONS.
6. THE LOT CORNERS WILL BE SET BY THE ENGINEER FOR INSTALLATION OF ALL WATER SERVICES. THESE LOT CORNERS SHALL BE CAREFULLY PRESERVED BY THE CONTRACTOR SO THE METER BOXES CAN BE SET IN PHASE II. ANY LOT CORNER DESTROYED OR REMOVED BY THE CONTRACTOR, HIS EMPLOYEES, OR BY ANY OTHER MEANS SHALL BE REPLACED AT THE CONTRACTOR'S EXPENSE.
7. STREETS WILL HAVE BEEN EXCAVATED DOWN TO SUBGRADE AND THE PARKWAY WILL BE CUT DOWN TO TOP OF CURB BY THE STREET CONTRACTOR, PRIOR TO CONSTRUCTION OF THE WATER MAINS. IT WILL BE THE UTILITY CONTRACTOR'S RESPONSIBILITY TO PROVIDE A PAD FOR HIS EQUIPMENT.
8. WATER METER BOXES IF APPLICABLE SHALL BE INSTALLED NINE FEET FROM FACE OF CURB TO CENTER OF THE METER BOX.
9. ALL GARBAGE OR SPOIL MATERIAL FROM THIS WORK SHALL BE REMOVED FROM THE SITE BY THE CONTRACTOR, AT HIS EXPENSE.
10. FINAL CONNECTION TO THE EXISTING WATER MAIN SHALL NOT BE MADE UNTIL WATER MAIN HAS BEEN PRESSURE TESTED, CHLORINATED AND THE S.A.W.S. RELEASES THE MAIN FOR TIE-IN AND USE.
11. UNIT PRICE BID FOR "STANDARD FIRE HYDRANT ASSEMBLY" SHALL INCLUDE FIRE HYDRANT, 6-INCH GATE VALVE AND 6-INCH VALVE BOX COMPLETE, ANCHOR BEND, AND ALL 6-INCH DI PIPE REQUIRED (DI PIPE REQUIRED SHALL INCLUDE ALL PIPE FROM THE TEE ON THE MAIN LINE TO THE FIRE HYDRANT).
12. WHEN SEWER LINES ARE INSTALLED IN THE VICINITY OF WATER MAINS, SUCH INSTALLATION SHALL BE IN STRICT ACCORDANCE WITH THE TEXAS NATURAL RESOURCE CONSERVATION COMMISSION "RULES AND REGULATIONS FOR PUBLIC WATER SYSTEMS" (1988 OR ANY REVISIONS THERETO).
13. A CLEAR SPACE SHALL BE PROVIDED AROUND ALL FIRE HYDRANTS. THIS AREA SHOULD HAVE A MINIMUM DIAMETER OF 3.0' AND BE CLEAN OF VERTICAL OBSTRUCTIONS, VALVES, AND METER BOXES.
14. SAWS REQUIRES LEAD FREE (< 0.25%) FIRE HYDRANTS.
15. UNLESS OTHERWISE NOTED ALL SERVICES SHALL BE 3/4" WITH 5/8" METER.

WATER (SAWS PRESSURE ZONE 828)

DEVELOPER'S NAME: K.B. HOME LONE STAR, INC.
ADDRESS: 4800 FREDERICKSBURG RD
CITY: SAN ANTONIO STATE: TEXAS ZIP: 78229
PHONE# (210) 301-2886 FAX# (210) 366-2378
SAWS BLOCK MAP# 190562 TOTAL EDU'S 120 TOTAL ACREAGE 20.67
TOTAL LINEAR FOOTAGE OF PIPE: 3304 8"W PLAT NO. 22-11800121
NUMBER OF LOTS 120 SAWS JOB NO. 22-1134

NO.	REVISION	DATE

9/22/2022

STATE OF TEXAS
REBECCA ANN CARROLL
92666
LICENSED
PROFESSIONAL ENGINEER

PAPE-DAWSON ENGINEERS
SAN ANTONIO I AUSTIN I HOUSTON I FORT WORTH I DALLAS
2000 NW LOOP 410 I SAN ANTONIO, TX 78213 I 210.375.9000
TEXAS ENGINEERING FIRM #470 I TEXAS SURVEYING FIRM #10028800

SPANISH TRAILS-UNIT 2 EAST

SAN ANTONIO, TEXAS

WATER DISTRIBUTION NOTES

PLAT NO. 22-11800121
JOB NO. 12044-05
DATE SEPTEMBER 2022
DESIGNER ABC
CHECKED ____ DRAWN AC
SHEET C5.10

Date: Sep 22, 2022, 9:51am User ID: jrodriguez
File: P:\12044\05\Design\Civil\WN12044D5.dwg

THIS DOCUMENT HAS BEEN PRODUCED FROM MATERIAL THAT WAS STORED AND/OR TRANSMITTED ELECTRONICALLY AND MAY HAVE BEEN INADVERTENTLY ALTERED. RELY ONLY ON FINAL HARDCOPY MATERIALS BEARING THE CONSULTANT'S ORIGINAL SIGNATURE AND SEAL. AERIAL IMAGERY PROVIDED BY GOOGLE© UNLESS OTHERWISE NOTED. Imagery © 2016,CAPCOG,Digital Globe,Texas Orthoimagery Program, USDA Farm Service Agency.

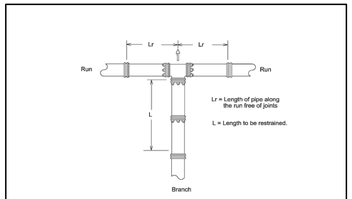

RESTRAINED LENGTH FOR TEES

PIPE SIZE (inch)	BRANCH SIZE (inch)	LENGTH OF RUN (ft.)	RESTRAINED LENGTH IN FEET, WHEN TEST PRESSURE = 200 psi	RESTRAINED LENGTH IN FEET, WHEN TEST PRESSURE = 150 psi
6	4	0	42	31
6	4	5	7	1
6	4	10	7	1
6	6	0	59	44
6	6	5	35	20
6	6	10	11	1
8	4	0	42	31
8	4	5	1	1
8	6	0	59	44
8	6	5	28	13
8	6	10	1	1
8	8	0	77	58
8	8	5	53	34
8	8	10	30	11
8	8	15	6	1

RESTRAINED LENGTH DESIGN

Restrained length calculations are for P.V.C pipe bedded in compacted granular material extending to the top of the pipe.The native soil material is assumed to be inorganic clay of high plasticity. Depth of bury is assumed to be 4 feet.

Note:
These calculations are provided for reference. The restrained length shall be designed based upon the conditions encountered during the installation.

PROPERTY OF		APPROVED	REVISED
SAN ANTONIO WATER SYSTEM SAN ANTONIO, TEXAS	RESTRAINED LENGTHS FOR TEES	March 2008	AUG 2019
		DD-839-04	SHEET 1 OF 2

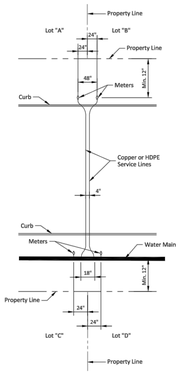

SINGLE SERVICE LINE - SINGLE METER

PROPERTY OF		APPROVED	REVISED
SAN ANTONIO WATER SYSTEM SAN ANTONIO, TEXAS	TYPICAL NEW DEVELOPMENT SERVICE ARRANGEMENT	March 2008	December 2018
		DD-824-05	SHEET 1 OF 1

NOTE:
Use:
(A) Anchoring Tee with M.J. Fitting or M.J. Valve
(B) Std. M.J. Tee with Anchoring Coupling or Anchoring Fitting
NOTE:
Polywrap Below Ground

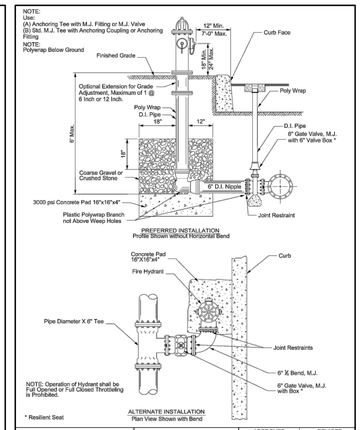

PROPERTY OF		APPROVED	REVISED
SAN ANTONIO WATER SYSTEM SAN ANTONIO, TEXAS	FIRE HYDRANT INSTALLATION (JOINT RESTRAINT)	MAY 2013	AUG 2019
		DD-834-01	SHEET 1 OF 2

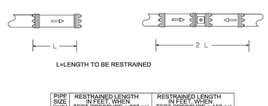

L=LENGTH TO BE RESTRAINED

PIPE SIZE (inch)	RESTRAINED LENGTH IN FEET, WHEN TEST PRESSURE = 200 psi	RESTRAINED LENGTH IN FEET, WHEN TEST PRESSURE = 150 psi
6	59	44
8	77	58
10	93	69
12	109	82

RESTRAINED LENGTH DESIGN

Restrained length calculations are for P.V.C. pipe bedded in compacted granular material extending to the top of the pipe. The native soil material is assumed to be inorganic clay of high plasticity. Depth of bury is assumed to be 4 feet.

Note:
These calculations are provide for reference. The restrained length shall be designed based upon the conditions encountered during the installation.

PROPERTY OF		APPROVED	REVISED
SAN ANTONIO WATER SYSTEM SAN ANTONIO, TEXAS	RESTRAINED LENGTHS FOR DEAD ENDS / INLINE VALVES	MARCH 2008	AUG 2019
		DD-839-05	SHEET 1 OF 1

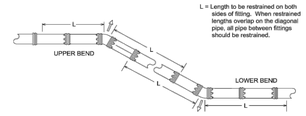

PIPE SIZE (inch)	BEND ANGLE (deg.)	LOW SIDE DEPTH	UPPER BEND RESTRAINED LENGTH IN FEET TEST PRESSURE = 200 psi	LOWER BEND RESTRAINED LENGTH IN FEET TEST PRESSURE = 200 psi	UPPER BEND RESTRAINED LENGTH IN FEET TEST PRESSURE = 150 psi	LOWER BEND RESTRAINED LENGTH IN FEET TEST PRESSURE = 150 psi
6	45	5	29	5	19	3
6	22.5	5	12	4	9	3
6	11.25	5	6	2	4	1
6	45	10	24	5	18	4
6	22.5	10	12	2	9	2
6	11.25	10	6	1	4	1
8	45	5	32	11	24	8
8	22.5	5	15	5	11	4
8	11.25	5	8	3	6	2
8	45	10	32	7	24	5
8	22.5	10	15	3	11	2
8	11.25	10	8	2	6	1
12	45	5	45	16	34	12
12	22.5	5	22	7	16	6
12	11.25	5	11	4	8	3
12	45	10	45	10	34	7
12	22.5	10	22	5	16	3
12	11.25	10	11	2	8	2

RESTRAINED LENGTH DESIGN
Restrained length calculations are for P.V.C. pipe bedded in compacted granular material extending to the top of the pipe. The native soil material is assumed to be inorganic clay of high plasticity. Depth of bury is assumed to be 4 feet.

Note:
These calculations are provided for reference. The restrained length shall be designed based upon the conditions encountered during the installation.

PROPERTY OF		APPROVED	REVISED
SAN ANTONIO WATER SYSTEM SAN ANTONIO, TEXAS	RESTRAINED LENGTHS VERTICAL OFFSETS	MARCH 2008	AUG 2019
		DD-839-06	SHEET 1 OF 1

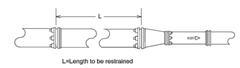

L=Length to be restrained

PIPE SIZE (inch)	SMALL SIZE (inch)	RESTRAINED LENGTH IN FEET, WHEN TEST PRESSURE = 200 psi	RESTRAINED LENGTH IN FEET, WHEN TEST PRESSURE = 150 psi
6	4	30	23
8	4	55	42
8	6	32	24
10	4	80	63
12	6	80	63
12	8	58	43

RESTRAINED LENGTH DESIGN
Restrained length calculations are for P.V.C. pipe bedded in compacted granular material extending to the top of the pipe. The native soil material is assumed to be inorganic clay of high plasticity. Depth of bury is assumed to be 4 feet.

Note:
These calculations are provided for reference. Th restrained length shall be designed based upon the conditions encountered during the installation.

PROPERTY OF		APPROVED	REVISED
SAN ANTONIO WATER SYSTEM SAN ANTONIO, TEXAS	RESTRAINED LENGTHS FOR REDUCERS	MARCH 2008	AUG 2019
		DD-839-07	SHEET 1 OF 1

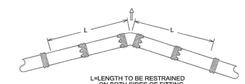

L=LENGTH TO BE RESTRAINED
ON BOTH SIDES OF FITTING

PIPE SIZE (inch)	BEND ANGLE (deg)	RESTRAINED LENGTH IN FEET, WHEN TEST PRESSURE = 200 psi	RESTRAINED LENGTH IN FEET, WHEN TEST PRESSURE = 150 psi
6	90	23	17
6	45	9	7
6	22.5	5	3
6	11.25	2	2
8	90	30	22
8	45	12	9
8	22.5	6	4
8	11.25	3	2
12	90	43	29
12	45	18	13
12	22.5	8	5
12	11.25	4	3

RESTRAINED LENGTH DESIGN
Restrained length calculations are for P.V.C pipe bedded in compacted granular material extending to the top of the pipe. The native soil material is assumed to be inorganic clay of high plasticity. Depth of bury is assumed to be 4 feet.

Note:
These calculations are provided for reference. The restrained length shall be designed based upon the conditions encountered during the installation.

PROPERTY OF		APPROVED	REVISED
SAN ANTONIO WATER SYSTEM SAN ANTONIO, TEXAS	RESTRAINED LENGTHS FOR HORIZONTAL BENDS	MARCH 2008	AUG 2019
		DD-839-08	SHEET 1 OF 1

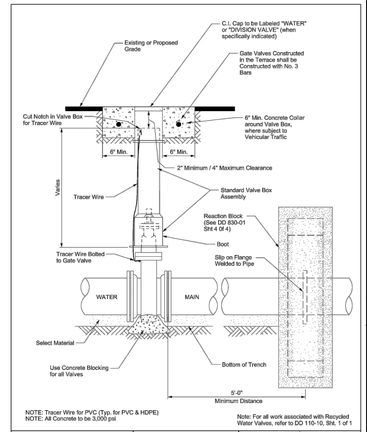

NOTE: Tracer Wire for PVC (Typ. for PVC & HDPE).
NOTE: All Concrete to be 3,000 psi

Note: For all work associated with Recycled Water Valves, refer to DD 110-10, Sht. 1 of 1

PROPERTY OF		APPROVED	REVISED
SAN ANTONIO WATER SYSTEM SAN ANTONIO, TEXAS	INSTALLATION OF NON-GEARED GATE VALVE WITH VALVE BOX AND EXTENSION	MARCH 2008	AUG 2019
		DD 828-01	SHEET 1 OF 1

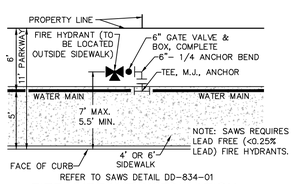

REFER TO SAWS DETAIL DD–834–01

FIRE HYDRANT INSTALLATION

NOT–TO–SCALE

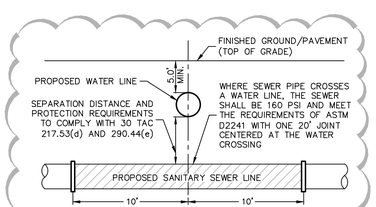

TYPICAL SANITARY SEWER/WATER CROSSING DETAIL

NOT–TO–SCALE

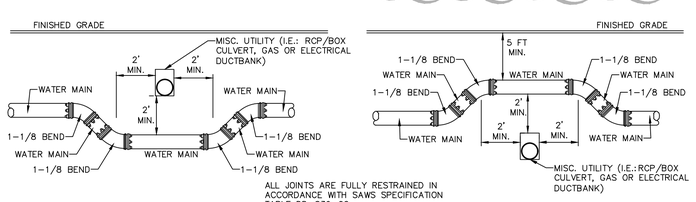

ALL JOINTS ARE FULLY RESTRAINED IN ACCORDANCE WITH SAWS SPECIFICATION TABLE DD–839–06.

TYPICAL UTILITY/WATER CROSSING DETAIL

NOT–TO–SCALE

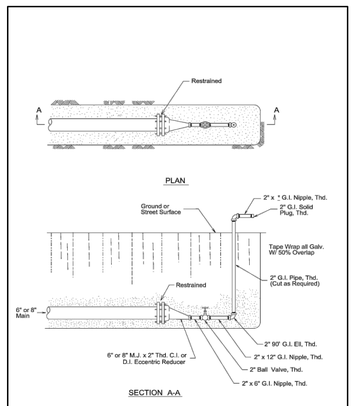

* Cut as required to extend beyond excavation

PROPERTY OF		APPROVED	REVISED
SAN ANTONIO WATER SYSTEM SAN ANTONIO, TEXAS	2" TEMPORARY BLOW-OFF ASSEMBLY ON 6" & 8" MAINS	MARCH 2008	AUG 2019
		DD-844-01	SHEET 1 OF 4

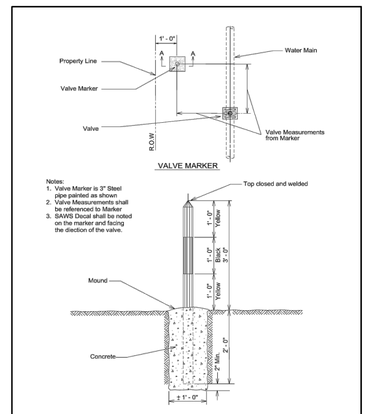

PROPERTY OF		APPROVED	REVISED
SAN ANTONIO WATER SYSTEM SAN ANTONIO, TEXAS	VALVE MARKER	MARCH 2008	AUG 2019
		DD-828-04	SHEET 1 OF 1

WATER (SAWS PRESSURE ZONE 828)

DEVELOPER'S NAME: K.B. HOME LONE STAR, INC.
ADDRESS: 4800 FREDERICKSBURG RD
CITY: SAN ANTONIO STATE: TEXAS ZIP: 78229
PHONE# (210) 301–2886 FAX# (210) 366–2378
SAWS BLOCK MAP# 190562 TOTAL EDU'S 120 TOTAL ACREAGE 20.67
TOTAL LINEAR FOOTAGE OF PIPE: 3304 8"W PLAT NO. 22–11800121
NUMBER OF LOTS 120 SAWS JOB NO. 22–1134

NO.	REVISION	DATE

9/22/2022

STATE OF TEXAS
REBECCA ANN CARROLL
92666
LICENSED
PROFESSIONAL ENGINEER

PAPE-DAWSON ENGINEERS
SAN ANTONIO I AUSTIN I HOUSTON I FORT WORTH I DALLAS
2000 NW LOOP 410 I SAN ANTONIO, TX 78213 I 210.375.9000
TEXAS ENGINEERING FIRM #470 I TEXAS SURVEYING FIRM #10028800

SPANISH TRAILS-UNIT 2 EAST

SAN ANTONIO, TEXAS

WATER DISTRIBUTION DETAILS

PLAT NO. 22-11800121
JOB NO. 12044–05
DATE SEPTEMBER 2022
DESIGNER ABC
CHECKED DRAWN AC
SHEET C5.20

Date: Sep 22, 2022, 10:45am User ID: jrodriguez
File: P:\120\44\05\Design\Civil\WDT120440 5.dwg

THIS DOCUMENT HAS BEEN PRODUCED FROM MATERIAL THAT WAS STORED AND/OR TRANSMITTED ELECTRONICALLY AND MAY HAVE BEEN INADVERTENTLY ALTERED. RELY ONLY ON FINAL HARDCOPY MATERIALS BEARING THE CONSULTANT'S ORIGINAL SIGNATURE AND SEAL. AERIAL IMAGERY PROVIDED BY GOOGLE© UNLESS OTHERWISE NOTED. Imagery © 2016,CAPCOG,Digital Globe,Texas Orthoimagery Program, USDA Farm Service Agency.

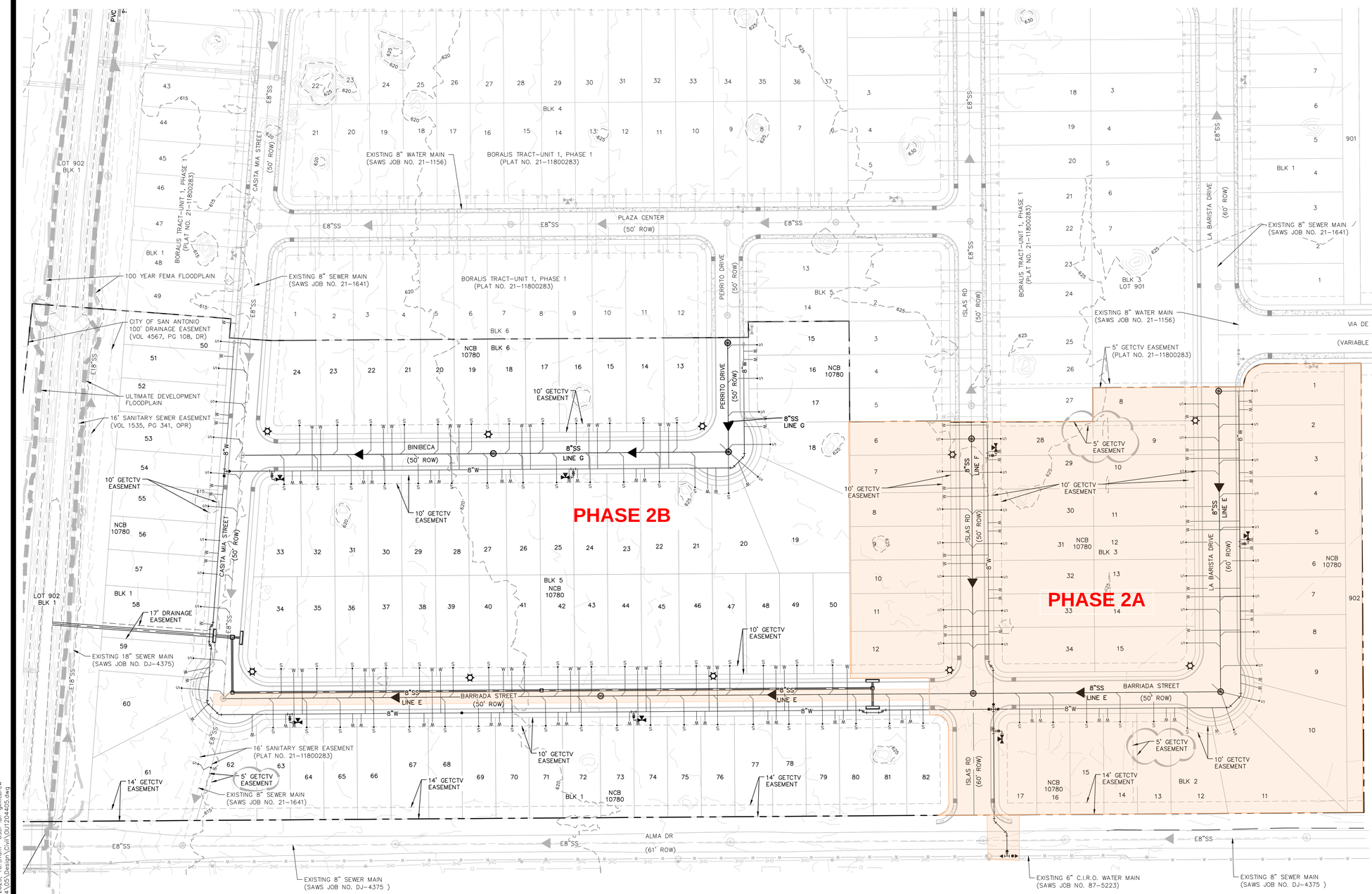

LOCATION MAP

NOT-TO-SCALE

UTILITY LEGEND

PROJECT LIMITS	
EXISTING WATER	W
EXISTING SEWER	SS
PROPOSED SEWER	SS MANHOLE
PROPOSED WATER	W FIRE HYDRANT
PROPOSED WYE & LATERAL	S
SINGLE WATER SERVICE	W
PROPOSED STREET LIGHTS	
EXISTING STREET LIGHTS	

CONDUIT NOTES:

1. CONTRACTOR SHALL INSTALL PERMANENT MARKERS IN PROPOSED CURB WHERE CONDUITS CROSS THE ROADWAY (BOTH SIDES).
2. CONDUITS SHALL BE PVC WITH MINIMUM BURY OF 36 INCHES BELOW PROPOSED FINISHED GRADE. SCHEDULE 80 TO BE USED FOR CPS CONDUITS, ALL OTHER CONDUITS ARE SCHEDULE 40.
3. ALL CONDUITS SHALL BE EXTENDED BEHIND CURBS OR PROPOSED SIDEWALKS A MINIMUM OF 3 FEET AND CAPPED FOR FUTURE USE.
4. ALL CONDUIT SLEEVES TO BE USED FOR ELECTRIC, GAS, OR TELECOMMUNICATION UTILITY CROSSINGS SHALL BE INSTALLED TO MEET OR EXCEED DESIGN REQUIREMENTS FOR THE UTILITY AGENCY WHICH THEY ARE SERVING, INCLUDING BUT NOT LIMITED TO THE DEPTH, TRENCH PLACEMENT, AND PROXIMITY TO OTHER UTILITIES. THE CONTRACTOR IS SOLELY RESPONSIBLE FOR VERIFYING AND INSTALLING THE CONDUIT SLEEVES TO MEET THESE SPECIFICATIONS INCLUDING COORDINATING WITH THE UTILITY AGENCY FOR ANY REQUIRED INSPECTIONS

TRENCH EXCAVATION SAFETY PROTECTION:

CONTRACTOR AND/ OR CONTRACTOR'S INDEPENDENTLY RETAINED EMPLOYEE OR STRUCTURAL DESIGN/ GEOTECHNICAL/ SAFETY/EQUIPMENT CONSULTANT, IF ANY, SHALL REVIEW THESE PLANS AND ANY AVAILABLE GEOTECHNICAL INFORMATION AND THE ANTICIPATED INSTALLATION SITES WITHIN THE PROJECT WORK AREA IN ORDER TO IMPLEMENT CONTRACTOR'S TRENCH EXCAVATION SAFETY PROTECTION SYSTEMS, PROGRAMS AND /OR PROCEDURES FOR THE PROJECT DESCRIBED IN THE CONTRACT DOCUMENTS. THE CONTRACTOR'S IMPLEMENTATION OF THESE SYSTEMS, PROGRAMS AND/OR PROCEDURES SHALL PROVIDE FOR ADEQUATE TRENCH EXCAVATION SAFETY PROTECTION THAT COMPLY WITH AS A MINIMUM, OSHA STANDARDS FOR TRENCH EXCAVATIONS. SPECIFICALLY, CONTRACTOR AND/OR CONTRACTOR'S INDEPENDENTLY RETAINED EMPLOYEE OR SAFETY CONSULTANT SHALL IMPLEMENT A TRENCH SAFETY PROGRAM IN ACCORDANCE WITH OSHA STANDARDS GOVERNING THE PRESENCE AND ACTIVITIES OF INDIVIDUALS WORKING IN AND AROUND TRENCH EXCAVATION.

CAUTION!!

CONTRACTOR SHALL BE REQUIRED TO LOCATE ALL PUBLIC OR PRIVATE UTILITIES INCLUDING BUT NOT LIMITING TO: WATER, SEWER, TELEPHONE AND FIBER OPTIC LINES, SITE LIGHTING ELECTRIC, SECONDARY ELECTRIC, PRIMARY ELECTRICAL DUCTBANKS, LANDSCAPE IRRIGATION FACILITIES, AND GAS LINES. ANY UTILITY CONFLICTS THAT ARISE SHOULD BE COMMUNICATED TO THE ENGINEER IMMEDIATELY AND PRIOR TO CONSTRUCTION. THE CONTRACTOR SHALL CONTACT 1-800-DIG-TESS A MINIMUM OF 48 HOURS PRIOR TO THE START OF CONSTRUCTION. ANY DAMAGE TO EXISTING UTILITIES SHALL BE THE SOLE RESPONSIBILITY OF THE CONTRACTOR AND THE REPAIR SHALL BE AT CONTRACTOR'S SOLE EXPENSE WHETHER THE UTILITY IS SHOWN ON THESE PLANS OR NOT.

NO.	REVISION	DATE
1	ADDED THREE 5' GETCTV EASEMENTS WITH LABELS	02/16/23

2/16/2023

STATE OF TEXAS
REBECCA ANN CARROLL
92666
LICENSED
PROFESSIONAL ENGINEER

PAPE-DAWSON ENGINEERS
SAN ANTONIO I AUSTIN I HOUSTON I FORT WORTH I DALLAS
2000 NW LOOP 410 I SAN ANTONIO, TX 78213 I 210.375.9000
TEXAS ENGINEERING FIRM #470 I TEXAS SURVEYING FIRM #10028800

SPANISH TRAILS-UNIT 2 EAST

SAN ANTONIO, TEXAS

OVERALL UTILITY PLAN

PLAT NO.	22-11800121
JOB NO.	12044-05
DATE	FEBRUARY 2023
DESIGNER	ABC
CHECKED	DRAWN AC
SHEET	C6.00

Date: Feb 16, 2023, 10:31am User ID: gkillebrew
File: P:\120\44\05\Design\Civil\01120440 5.dwg

GRADING NOTES:

1. ALL MATERIALS AND CONSTRUCTION PROCEDURES WITHIN THIS SCOPE OF WORK WHERE NOT SPECIFICALLY COVERED IN THE SPECIFICATIONS OR GEOTECHNICAL REPORT SHALL CONFORM TO ALL APPLICABLE CITY, COUNTY AND TXDOT STANDARD SPECIFICATIONS FOR PUBLIC WORKS CONSTRUCTION (LATEST EDITION).

2. SITE PREPARATION, GRADING, EXCAVATION AND FILL SHALL BE PERFORMED IN ACCORDANCE WITH THE PROJECT GEOTECHNICAL REPORT AND SPECIFICATIONS.

3. ALL SELECT FILL MATERIAL PROVIDED SHALL BE APPROVED BY THE GEOTECHNICAL ENGINEER PRIOR TO PLACING AND COMPACTING.

4. ALL ELEVATIONS AND PROPOSED CONTOURS SHOWN ON THIS GRADING PLAN REFLECT FINISHED GRADES. THE THICKNESS OF PAVING, BASE, GRASS, TOPSOIL, AND MULCH MUST BE SUBTRACTED TO OBTAIN SUBGRADE ELEVATIONS.

5. THE CONTRACTOR SHALL IMMEDIATELY NOTIFY THE ENGINEER OF ANY QUESTIONS THAT MAY ARISE CONCERNING THE INTENT, PLACEMENT, OR LIMITS OF DIMENSIONS OR GRADES NECESSARY FOR CONSTRUCTION OF THIS PROJECT.

6. THE CONTRACTOR SHALL VERIFY THE SUITABILITY OF ALL EXISTING AND PROPOSED SITE CONDITIONS INCLUDING GRADES AND DIMENSIONS BEFORE COMMENCEMENT OF CONSTRUCTION. THE ENGINEER SHALL BE NOTIFIED IMMEDIATELY OF ANY DISCREPANCIES.

7. THE CONTRACTOR SHALL BE RESPONSIBLE FOR ACQUIRING ALL PERMITS, TESTS, APPROVALS AND ACCEPTANCES REQUIRED TO COMPLETE CONSTRUCTION OF THIS PROJECT.

8. THE CONTRACTOR SHALL REMOVE TOP SOIL, GRASS, ROOTS, DEBRIS, ETC. AND DISPOSE OFF SITE THOSE MATERIALS NOT SUITABLE FOR EMBANKMENT AND TOPSOIL. CLEAN STRIPPINGS AND TOPSOIL MAY BE STOCKPILED ON SITE FOR REUSE IN A LOCATION SPECIFIED BY THE OWNER.

9. THE SITE CONTRACTOR SHALL BE RESPONSIBLE FOR SITE STABILIZATION. ALL DISTURBED AREAS SHALL BE REVEGETATED IN ACCORDANCE WITH PROJECT SPECIFICATIONS AND TPDES/SWPPP REQUIREMENTS. REFERENCE THE LANDSCAPE ARCHITECT'S PLAN, IF APPLICABLE.

10. THE CONTRACTOR SHALL TAKE ALL NECESSARY PRECAUTIONS (USE OF SILT FENCES, ETC.) TO KEEP DRAINAGE AND SILT FROM WASHING ONTO ADJACENT PROPERTY, STREETS, OR DRAINAGE WAYS. CONTRACTOR SHALL IMMEDIATELY REMOVE SILT/DEBRIS WHICH WASHES OFFSITE OR INTO EXISTING STORM DRAIN SYSTEMS. (SEE SWPPP PLANS & TPDES BOOK).

11. THE CONTRACTOR SHALL OBTAIN GRADES SHOWN HEREON WITHIN +/- ONE-TENTH (0.10) FOOT.

12. IN PROPOSED PAVING AREAS, STREET DESIGN PLANS SHALL CONTROL. ALL EARTHEN SLOPES SHALL BE A MAXIMUM OF 3:1 AND A MINIMUM OF 1.0% UNLESS OTHERWISE SHOWN.

13. THE CONTRACTOR SHALL PROVIDE A SMOOTH TRANSITION BETWEEN EXISTING SITE AND PROPOSED IMPROVEMENTS.

14. THE CONTRACTOR SHALL BE RESPONSIBLE FOR RESTORING TO ITS ORIGINAL, OR BETTER, CONDITION ANY DAMAGE DONE TO EXISTING TREES, BUILDINGS, UTILITIES, FENCES, PAVEMENT, CURBS, OR DRIVEWAYS (NO SEPARATE PAY ITEMS).

15. THE CONTRACTOR SHALL EXERCISE EXTREME CAUTION IN WORKING NEAR UTILITIES, GAS LINES, SEWER, OR EXISTING APPURTENANCES. PRIOR TO PERFORMING ANY EXCAVATION, CONTRACTOR SHALL CONTACT ALL UTILITY COMPANIES AND ASSURE HIMSELF THAT ALL UTILITIES HAVE BEEN ADEQUATELY LOCATED AND IDENTIFIED. THE ENGINEER SHALL BE NOTIFIED IF ANY UTILITY CONFLICTS ARE DISCOVERED.

16. UTILITIES SHOWN ON THE PLANS ARE FROM INFORMATION SOURCES AVAILABLE AT THE TIME OF DESIGN BUT MAY NOT REPRESENT ALL EXISTING UTILITIES ON SITE. THE CONTRACTOR WILL BE RESPONSIBLE FOR DETERMINING EXACT LOCATION OF ALL UTILITIES WHETHER SHOWN ON THE PLANS OR NOT. THE CONTRACTOR SHALL UNCOVER EXISTING UTILITIES PRIOR TO CONSTRUCTION AND VERIFY SIZE, GRADE AND LOCATION. THE CONTRACTOR SHALL NOTIFY THE ENGINEER IMMEDIATELY OF ANY DEVIATIONS FROM PLANS PRIOR TO BEGINNING CONSTRUCTION. ANY DAMAGE TO EXISTING UTILITIES, WHETHER SHOWN ON THE PLANS OR NOT, SHALL BE THE CONTRACTORS RESPONSIBILITY TO REPAIR, AT HIS OWN EXPENSE.

17. POSITIVE DRAINAGE SHALL BE MAINTAINED THROUGHOUT THE SCOPE OF THE PROJECT. DRAINAGE SHALL BE DIRECTED AWAY FROM ALL BUILDING FOUNDATIONS. CONTRACTOR SHOULD TAKE PRECAUTIONS NOT TO ALLOW ANY PONDING OF WATER.

18. FOR FILL PLACEMENT ON HILL SIDES OR STEEP SLOPE AREAS, THE CONTRACTOR SHALL REFERENCE THE PROJECT SPECIFICATIONS AND GEOTECHNICAL REPORT FOR SPECIAL INSTRUCTIONS REGARDING BENCHING.

19. NO WORK SHALL BE PERFORMED IN A PUBLIC RIGHT-OF-WAY WITHOUT A PERMIT.

GRADING LEGEND

- PROJECT LIMITS
- 100 YR FLOODPLAIN
- EXISTING CONTOUR — 976
- PROPOSED CONTOUR — 970
- FLOW ARROW (EXISTING)
- FLOW ARROW (PROPOSED)
- TREES TO REMAIN

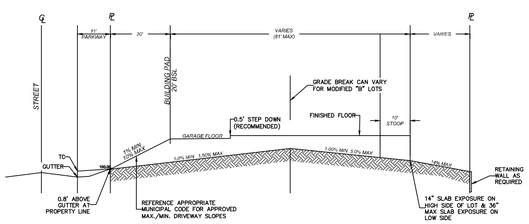

PROPOSED "B" LOT GRADING CRITERIA

NOT TO SCALE

1. SHOW RETAINING WALLS GREATER THAN 1 FT. ON GRADING PLAN.
2. FINISHED GRADE AT FRONT BUILDING SETBACK LINE SHALL BE NO LESS THAN 1% SLOPE BACK TO RIGHT-OF-WAY.
3. MAXIMUM GRADE ACROSS BUILDING PAD SHALL BE 1.50% TO THE FRONT AND 3.0% TO THE BACK.
4. BUILDING PAD GRADE SHALL EXTEND 10' BEYOND THE ESTIMATED PAD LENGTH.
5. MAXIMUM GRADE ON REAR YARD SHALL BE 14%; MINIMUM GRADE ON REAR YARD SHALL BE 1%.
6. CROSSFALL ACROSS BUILDING PAD TO CREATE NO MORE THAN 36 IN. SLAB EXPOSURE.

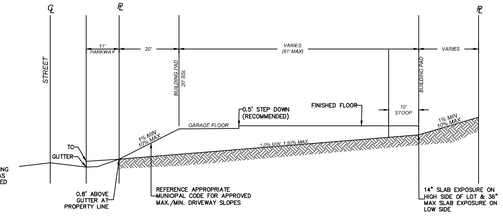

PROPOSED "A" LOT GRADING CRITERIA

NOT TO SCALE

1. SHOW RETAINING WALLS GREATER THAN 1 FT. ON GRADING PLAN.
2. FINISHED GRADE AT FRONT BUILDING SETBACK NO LESS THAN 1% SLOPE BACK TO RIGHT-OF-WAY.
3. MAXIMUM GRADE ACROSS BUILDING PAD SHALL BE 1.50%; MINIMUM GRADE ACROSS BUILDING PAD SHALL BE 1%.
4. BUILDING PAD GRADE SHALL EXTEND 10' BEYOND THE ESTIMATED PAD LENGTH.
5. MAXIMUM GRADE ON REAR YARD SHALL BE 10%; MINIMUM GRADE ON REAR YARD SHALL BE 1%.
6. CROSSFALL ACROSS BUILDING PAD TO CREATE NO MORE THAN 36 IN. SLAB EXPOSURE.

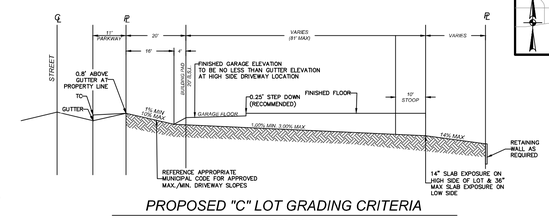

PROPOSED "C" LOT GRADING CRITERIA

NOT TO SCALE

1. SHOW RETAINING WALLS GREATER THAN 1 FT. ON GRADING PLAN.
2. FINISHED GRADE AT FRONT BUILDING SETBACK LINE SHALL BE NO LESS THAN 1% SLOPE.
3. MAXIMUM GRADE THROUGH BUILDING PAD SHALL BE 3.0%; MINIMUM GRADE THROUGH BUILDING PAD SHALL BE 1%.
4. BUILDING PAD GRADE SHALL EXTEND 10' BEYOND THE ESTIMATED PAD LENGTH.
5. MAXIMUM GRADE ON REAR YARD SHALL BE 14%; MINIMUM GRADE ON REAR YARD SHALL BE 1%.
6. CROSSFALL ACROSS BUILDING PAD TO CREATE NO MORE THAN 36 IN. SLAB EXPOSURE.

LOCATION MAP

NOT-TO-SCALE

SCALE: 1"= 50'

0' 50' 100' 150'

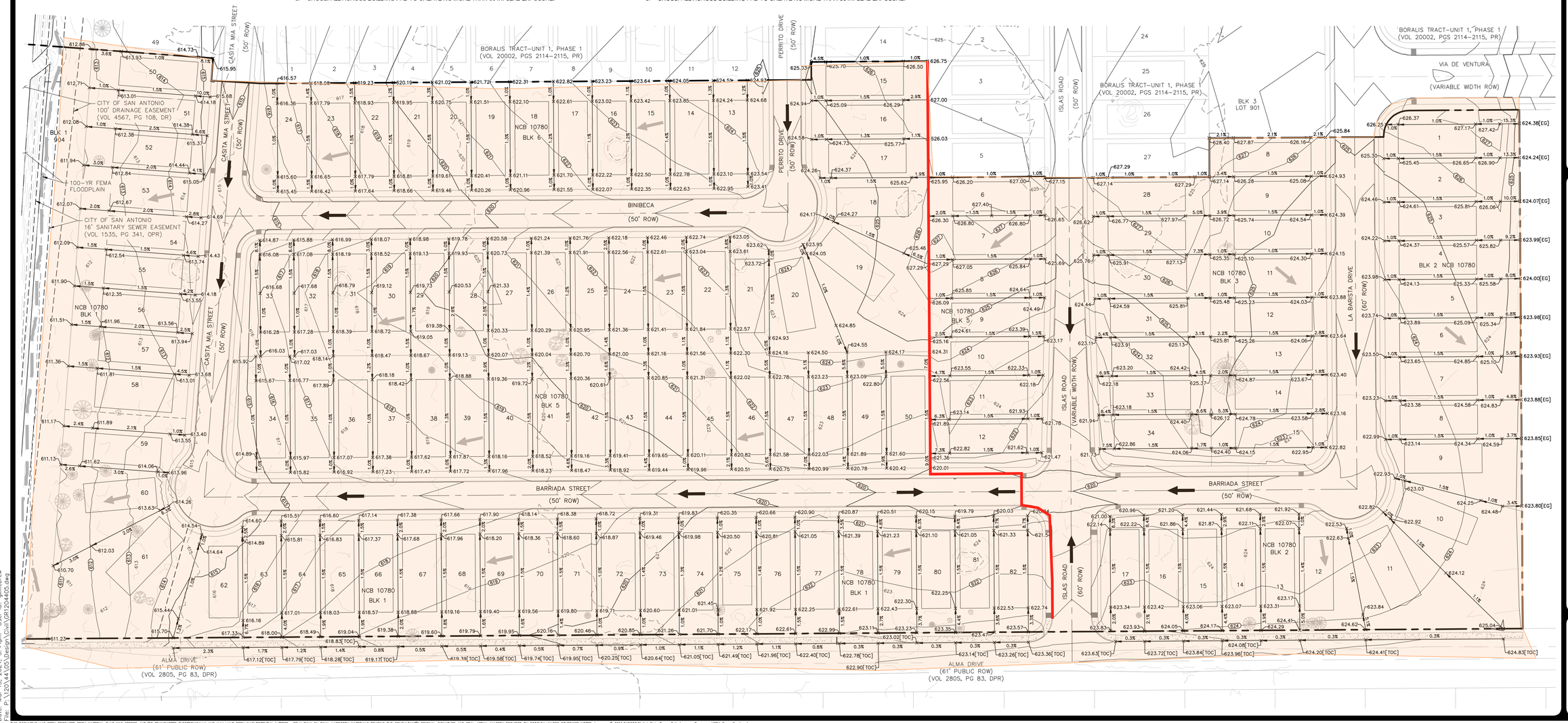

NO.	REVISION	DATE

3/13/2024

STATE OF TEXAS
REBECCA ANN CARROLL
92666
LICENSED
PROFESSIONAL ENGINEER

PAPE-DAWSON ENGINEERS

SAN ANTONIO I AUSTIN I HOUSTON I FORT WORTH I DALLAS
2000 NW LOOP 410 I SAN ANTONIO, TX 78213 I 210.375.9000
TEXAS ENGINEERING FIRM #470 I TEXAS SURVEYING FIRM #10028800

SPANISH TRAILS-UNIT 2 EAST

SAN ANTONIO, TEXAS

GRADING PLAN

PHASE 2A

PLAT NO. 22-11800121
JOB NO. 12044-05
DATE MARCH 2024
DESIGNER AC
CHECKED ____ DRAWN AC
SHEET C7.00

Date: Mar 13, 2024, 3:44pm User ID: gkilbebree
File: P:\120\44\DS\Design\Civil\GR120440S.dwg

THIS DOCUMENT HAS BEEN PRODUCED FROM MATERIAL THAT WAS STORED AND/OR TRANSMITTED ELECTRONICALLY AND MAY HAVE BEEN INADVERTENTLY ALTERED. RELY ONLY ON FINAL HARDCOPY MATERIALS BEARING THE CONSULTANT'S ORIGINAL SIGNATURE AND SEAL. AERIAL IMAGERY PROVIDED BY GOOGLE© UNLESS OTHERWISE NOTED. Imagery © 2016,CAPCOG,Digital Globe,Texas OrthoImagery Program, USDA Farm Service Agency.

· Grade all of site with Unit 2A

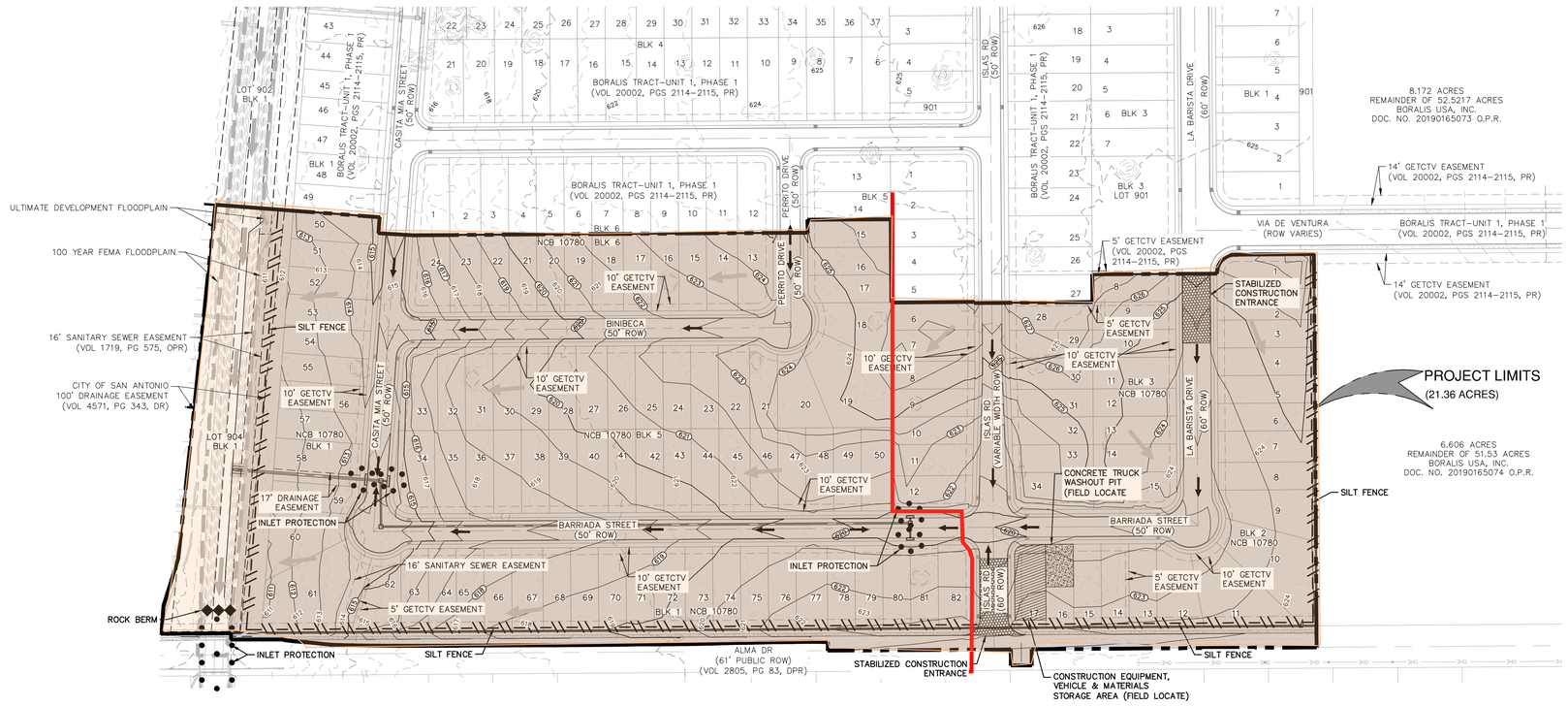

LOCATION MAP

NOT-TO-SCALE

SCALE: 1"= 100' 0' 100' 200' 300'

SWPPP LEGEND

- PROJECT LIMITS
- UNIT BOUNDARY
- EXISTING CONTOUR (976)
- PROPOSED CONTOUR (970)
- FLOW ARROW (EXISTING)
- FLOW ARROW (PROPOSED)
- SILT FENCE
- ROCK BERM
- GRAVEL FILTER BAGS
- GRATE INLET PROTECTION
- LIMITS OF DISTURBED AREA (±20.21 AC) VERTICAL STOCKS ARE NEEDED FOR THESE LOTS
- STABILIZED CONSTRUCTION ENTRANCE/EXIT (FIELD LOCATE)
- CONSTRUCTION EQUIPMENT, VEHICLE & MATERIALS STORAGE AREA (FIELD LOCATE)
- CONCRETE TRUCK WASH-OUT PIT (FIELD LOCATE)

GENERAL NOTES

1. DO NOT DISTURB VEGETATED AREAS (TREES, GRASS, WEEDS, BRUSH, ETC.) ANY MORE THAN NECESSARY FOR CONSTRUCTION.

2. CONSTRUCTION ENTRANCE/EXIT LOCATION, CONCRETE WASH-OUT PIT, AND CONSTRUCTION EQUIPMENT AND MATERIAL STORAGE YARD TO BE DETERMINED IN THE FIELD.

3. STORM WATER POLLUTION PREVENTION CONTROLS MAY NEED TO BE MODIFIED IN THE FIELD TO ACCOMPLISH THE DESIRED EFFECT. ALL MODIFICATIONS ARE TO BE NOTED ON THIS EXHIBIT AND SIGNED AND DATED BY THE RESPONSIBLE PARTY.

4. RESTRICT ENTRY/EXIT TO THE PROJECT SITE TO DESIGNATED LOCATIONS BY USE OF ADEQUATE FENCING, IF NECESSARY.

5. ALL STORM WATER POLLUTION PREVENTION CONTROLS ARE TO BE MAINTAINED AND IN WORKING CONDITIONS AT ALL TIMES.

6. FOR A COMPLETE LISTING OF TEMPORARY STORM WATER POLLUTION PREVENTION CONTROLS REFER TO THE TPDES STORM WATER POLLUTION PREVENTION PLAN.

7. STORM WATER POLLUTION PREVENTION STRUCTURES SHOULD BE CONSTRUCTED WITHIN THE SITE BOUNDARIES. SOME OF THESE FEATURES MAY BE SHOWN OUTSIDE THE SITE BOUNDARIES ON THIS PLAN FOR VISUAL CLARITY.

8. AS SOON AS PRACTICAL, ALL DISTURBED SOIL THAT WILL NOT BE COVERED BY IMPERVIOUS COVER SUCH AS PARKWAY AREAS, EASEMENT AREAS, EMBANKMENT SLOPES, ETC. WILL BE STABILIZED PER APPLICABLE PROJECT SPECIFICATIONS.

9. BEST MANAGEMENT PRACTICES MAY BE INSTALLED IN STAGES TO COINCIDE WITH THE DISTURBANCE OF UPGRADIENT AREAS.

10. BEST MANAGEMENT PRACTICES MAY BE REMOVED IN STAGES ONCE THE WATERSHED FOR THAT PORTION CONTROLLED BY THE BEST MANAGEMENT PRACTICES HAS BEEN STABILIZED IN ACCORDANCE WITH TPDES REQUIREMENTS.

11. UPON COMPLETION OF THE PROJECT, INCLUDING SITE STABILIZATION, AND BEFORE FINAL PAYMENT IS ISSUED, CONTRACTOR SHALL REMOVE ALL SEDIMENT AND EROSION CONTROL MEASURES, PAYING SPECIAL ATTENTION TO ROCK BERMS IN DRAINAGE FEATURES.

12. WHERE VEGETATED FILTER STRIPS ARE INDICATED, CONTRACTOR SHALL VERIFY THAT SUFFICIENT VEGETATION EXISTS, OTHERWISE CONTRACTOR SHALL PLACE SILT FENCING IN LIEU OF VEGETATED FILTER STRIP.

13. SHADED AREA DENOTES LIMITS OF DISTURBED AREAS. OTHER AREAS WITHIN THE PROJECT LIMITS, WITH THE EXCEPTION OF A CONSTRUCTION EQUIPMENT AND MATERIAL STORAGE YARD, ARE NOT A PART OF THIS TPDES STORM WATER POLLUTION PREVENTION PLAN (SWP3) AND WILL NOT BE DISTURBED BY CIVIL CONSTRUCTION ACTIVITIES. HOUSE CONSTRUCTION ACTIVITIES WILL REQUIRE A SEPARATE STORM WATER POLLUTION PREVENTION PLAN.

14. PRIOR TO BEGINNING CONSTRUCTION, CONTRACTOR SHALL COORDINATE PLACEMENT OF TEMPORARY BEST MANAGEMENT PRACTICES WITHIN TXDOT RIGHT-OF-WAY WITH TXDOT.

15. CPS ENERGY WILL FUNCTION AS A SECONDARY OPERATOR ON THIS PROJECT AND WILL BE INSTALLING ELECTRIC UTILITIES FOR ON-SITE CONSTRUCTION AND OFF-SITE FEED TO THE PROJECT.

THE ENGINEERING SEAL HAS BEEN AFFIXED TO THIS SHEET ONLY FOR THE PURPOSE OF DEMONSTRATING COMPLIANCE WITH THE TPDES-STORM WATER POLLUTION PREVENTION PLAN (SWP3) REGULATIONS.

THIS SHEET HAS BEEN PREPARED FOR PURPOSES OF THE SWP3 ONLY. ALL OTHER CIVIL ENGINEERING RELATED INFORMATION SHOULD BE ACQUIRED FROM THE APPROPRIATE SHEET IN THE CIVIL IMPROVEMENT PLANS.

SWP3 MODIFICATIONS

DATE	SIGNATURE	DESCRIPTION

NO.	REVISION	DATE

4/24/2023

STATE OF TEXAS
REBECCA ANN CARROLL
92666
LICENSED
PROFESSIONAL ENGINEER

PAPE-DAWSON ENGINEERS
SAN ANTONIO I AUSTIN I HOUSTON I FORT WORTH I DALLAS
2000 NW LOOP 410 I SAN ANTONIO, TX 78213 I 210.375.9000
TEXAS ENGINEERING FIRM #470 I TEXAS SURVEYING FIRM #10028800

SPANISH TRAILS-UNIT 2 EAST

SAN ANTONIO, TEXAS

STORMWATER POLLUTION PREVENTION PLAN

PHASE 2A

PLAT NO. 22-11800121
JOB NO. 12044-05
DATE APRIL 2023
DESIGNER AC
CHECKED DRAWN AC
SHEET C8.00

Date: Apr 24, 2023, 2:56pm User ID: gkilleebrew
File: P:\120\44\05\Design\Civil\SWPPP\204405.dwg

THIS DOCUMENT HAS BEEN PRODUCED FROM MATERIAL THAT WAS STORED AND/OR TRANSMITTED ELECTRONICALLY AND MAY HAVE BEEN INADVERTENTLY ALTERED. RELY ONLY ON FINAL HARDCOPY MATERIALS BEARING THE CONSULTANT'S ORIGINAL SIGNATURE AND SEAL. AERIAL IMAGERY PROVIDED BY GOOGLE© UNLESS OTHERWISE NOTED. Imagery © 2016,CAPCOG,Digital Globe,Texas Orthoimagery Program, USDA Farm Service Agency.

Install all of measures with Unit 2A

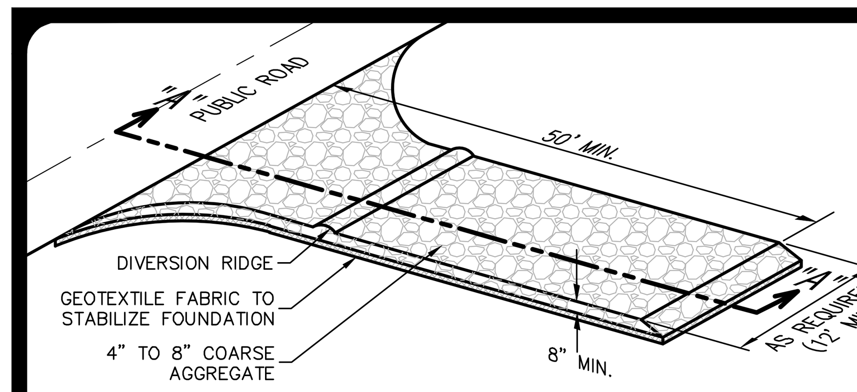

SCHEMATIC OF TEMPORARY CONSTRUCTION ENTRANCE/EXIT

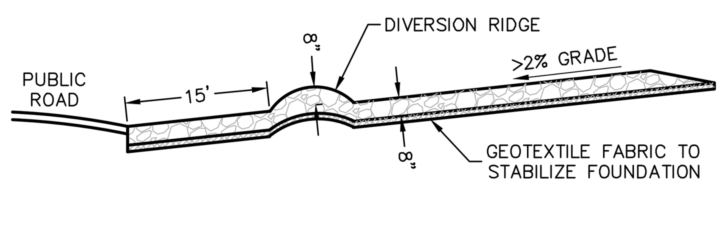

SECTION "A-A" OF A CONSTRUCTION ENTRANCE/EXIT

MATERIALS

1. THE AGGREGATE SHOULD CONSIST OF 4-INCH TO 8-INCH WASHED STONE OVER A STABLE FOUNDATION AS SPECIFIED IN THE PLAN.

2. THE AGGREGATE SHOULD BE PLACED WITH A MINIMUM THICKNESS OF 8-INCHES.

3. THE GEOTEXTILE FABRIC SHOULD BE DESIGNED SPECIFICALLY FOR USE AS A SOIL FILTRATION MEDIA WITH AN APPROXIMATE WEIGHT OF 6 OZ/YD^2, A MULLEN BURST RATING OF 140 LB/IN^2, AND AN EQUIVALENT OPENING SIZE GREATER THAN A NUMBER 50 SIEVE.

4. IF A WASHING FACILITY IS REQUIRED, A LEVEL AREA WITH A MINIMUM OF 4-INCH DIAMETER WASHED STONE OR COMMERCIAL ROCK SHOULD BE INCLUDED IN THE PLANS. DIVERT WASTEWATER TO A SEDIMENT TRAP OR BASIN.

INSTALLATION

1. AVOID CURVES ON PUBLIC ROADS AND STEEP SLOPES. REMOVE VEGETATION AND OTHER OBJECTIONABLE MATERIAL FROM THE FOUNDATION AREA. GRADE CROWN FOUNDATION FOR POSITIVE DRAINAGE.

2. THE MINIMUM WIDTH OF THE ENTRANCE/EXIT SHOULD BE 12 FEET OR THE FULL WIDTH OF EXIT ROADWAY, WHICHEVER IS GREATER.

3. THE CONSTRUCTION ENTRANCE SHOULD BE AT LEAST 50 FEET LONG.

4. IF THE SLOPE TOWARD THE ROAD EXCEEDS 2%, CONSTRUCT A RIDGE, 6-INCHES TO 8-INCHES HIGH WITH 3:1 (H:V) SIDE SLOPES, ACROSS THE FOUNDATION APPROXIMATELY 15 FEET FROM THE ENTRANCE TO DIVERT RUNOFF AWAY FROM THE PUBLIC ROAD.

5. PLACE GEOTEXTILE FABRIC AND GRADE FOUNDATION TO IMPROVE STABILITY, ESPECIALLY WHERE WET CONDITIONS ARE ANTICIPATED.

6. PLACE STONE TO DIMENSIONS AND GRADE SHOWN ON PLANS. LEAVE SURFACE SMOOTH AND SLOPE FOR DRAINAGE.

7. DIVERT ALL SURFACE RUNOFF AND DRAINAGE FROM THE STONE PAD TO A SEDIMENT TRAP OR BASIN.

8. INSTALL PIPE UNDER PAD AS NEEDED TO MAINTAIN PROPER PUBLIC ROAD DRAINAGE.

COMMON TROUBLE POINTS

1. INADEQUATE RUNOFF CONTROL-SEDIMENT WASHES ONTO PUBLIC ROAD.

2. STONE TOO SMALL OR GEOTEXTILE FABRIC ABSENT, RESULTS IN MUDDY CONDITION AS STONE IS PRESSED INTO SOIL.

3. PAD TOO SHORT FOR HEAVY CONSTRUCTION TRAFFIC-EXTEND PAD BEYOND THE MINIMUM 50-FOOT LENGTH AS NECESSARY.

4. PAD NOT FLARED SUFFICIENTLY AT ROAD SURFACE, RESULTS IN MUD BEING TRACKED ON TO ROAD AND POSSIBLE DAMAGE TO ROAD.

5. UNSTABLE FOUNDATION – USE GEOTEXTILE FABRIC UNDER PAD AND/OR IMPROVE FOUNDATION DRAINAGE.

INSPECTION AND MAINTENANCE GUIDELINES

1. THE ENTRANCE SHOULD BE MAINTAINED IN A CONDITION, WHICH WILL PREVENT TRACKING OR FLOWING OF SEDIMENT ONTO PUBLIC RIGHTS-OF-WAY. THIS MAY REQUIRE PERIODIC TOP DRESSING WITH ADDITIONAL STONE AS CONDITIONS DEMAND AND REPAIR AND/OR CLEANOUT OF ANY MEASURES USED TO TRAP SEDIMENT.

2. ALL SEDIMENT SPILLED, DROPPED, WASHED OR TRACKED ONTO PUBLIC RIGHTS-OF-WAY SHOULD BE REMOVED IMMEDIATELY BY CONTRACTOR.

3. WHEN NECESSARY, WHEELS SHOULD BE CLEANED TO REMOVE SEDIMENT PRIOR TO ENTRANCE ONTO PUBLIC RIGHT-OF-WAY.

4. WHEN WASHING IS REQUIRED, IT SHOULD BE DONE ON AN AREA STABILIZED WITH CRUSHED STONE THAT DRAINS INTO AN APPROVED SEDIMENT TRAP OR SEDIMENT BASIN.

5. ALL SEDIMENT SHOULD BE PREVENTED FROM ENTERING ANY STORM DRAIN, DITCH OR WATER COURSE BY USING APPROVED METHODS.

STABILIZED CONSTRUCTION ENTRANCE/EXIT DETAIL

NOT-TO-SCALE

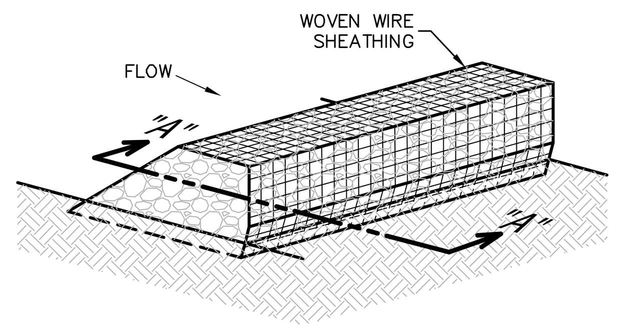

ISOMETRIC PLAN VIEW

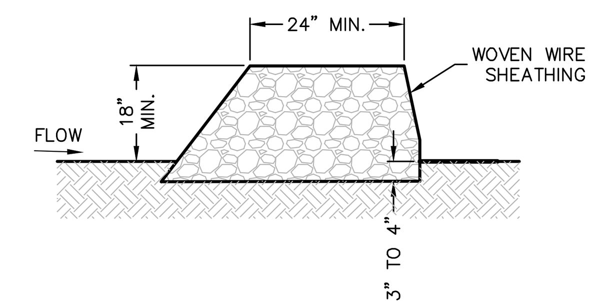

SECTION "A-A"

ROCK BERMS

THE PURPOSE OF A ROCK BERM IS TO SERVE AS A CHECK DAM IN AREAS OF CONCENTRATED FLOW, TO INTERCEPT SEDIMENT-LADEN RUNOFF, DETAIN THE SEDIMENT AND RELEASE THE WATER IN SHEET FLOW. THE ROCK BERM SHOULD BE USED WHEN THE CONTRIBUTING DRAINAGE AREA IS LESS THAN 5 ACRES. ROCK BERMS ARE USED IN AREAS WHERE THE VOLUME OF RUNOFF IS TOO GREAT FOR A SILT FENCE TO CONTAIN. THEY ARE LESS EFFECTIVE FOR SEDIMENT REMOVAL THAN SILT FENCES, PARTICULARLY FOR FINE PARTICLES, BUT ARE ABLE TO WITHSTAND HIGHER FLOWS THAN A SILT FENCE. AS SUCH, ROCK BERMS ARE OFTEN USED IN AREAS OF CHANNEL FLOWS (DITCHES, GULLIES, ETC.). ROCK BERMS ARE MOST EFFECTIVE AT REDUCING BED LOAD IN CHANNELS AND SHOULD NOT BE SUBSTITUTED FOR OTHER EROSION AND SEDIMENT CONTROL MEASURES FARTHER UP THE WATERSHED.

INSPECTION AND MAINTENANCE GUIDELINES

1. INSPECTION SHOULD BE MADE WEEKLY AND AFTER EACH RAINFALL BY THE RESPONSIBLE PARTY. FOR INSTALLATIONS IN STREAMBEDS, ADDITIONAL DAILY INSPECTIONS SHOULD BE MADE.

2. REMOVE SEDIMENT AND OTHER DEBRIS WHEN BUILDUP REACHES 6 INCHES AND DISPOSE OF THE ACCUMULATED SILT IN AN APPROVED MANNER THAT WILL NOT CAUSE ANY ADDITIONAL SILTATION.

3. REPAIR ANY LOOSE WIRE SHEATHING.

4. THE BERM SHOULD BE RESHAPED AS NEEDED DURING INSPECTION.

5. THE BERM SHOULD BE REPLACED WHEN THE STRUCTURE CEASES TO FUNCTION AS INTENDED DUE TO SILT ACCUMULATION AMONG THE ROCKS, WASHOUT, CONSTRUCTION TRAFFIC DAMAGE, ETC.

6. THE ROCK BERM SHOULD BE LEFT IN PLACE UNTIL ALL UPSTREAM AREAS ARE STABILIZED AND ACCUMULATED SILT REMOVED.

MATERIALS

1. THE BERM STRUCTURE SHOULD BE SECURED WITH A WOVEN WIRE SHEATHING HAVING MAXIMUM OPENING OF 1 INCH AND A MINIMUM WIRE DIAMETER OF 20 GAUGE GALVANIZED AND SHOULD BE SECURED WITH SHOAT RINGS.

2. CLEAN, OPEN GRADED 3-INCH TO 5-INCH DIAMETER ROCK SHOULD BE USED, EXCEPT IN AREAS WHERE HIGH VELOCITIES OR LARGE VOLUMES OF FLOW ARE EXPECTED, WHERE 5-INCH TO 8-INCH DIAMETER ROCKS MAY BE USED.

INSTALLATION

1. LAY OUT THE WOVEN WIRE SHEATHING PERPENDICULAR TO THE FLOW LINE. THE SHEATHING SHOULD BE 20 GAUGE WOVEN WIRE MESH WITH 1 INCH OPENINGS.

2. BERM SHOULD HAVE A TOP WIDTH OF 2 FEET MINIMUM WITH SIDE SLOPES BEING 2:1 (H:V) OR FLATTER.

3. PLACE THE ROCK ALONG THE SHEATHING AS SHOWN IN THE DIAGRAM TO A HEIGHT NOT LESS THAN 18".

4. WRAP THE WIRE SHEATHING AROUND THE ROCK AND SECURE WITH TIE WIRE SO THAT THE ENDS OF THE SHEATHING OVERLAP AT LEAST 2 INCHES, AND THE BERM RETAINS ITS SHAPE WHEN WALKED UPON.

5. BERM SHOULD BE BUILT ALONG THE CONTOUR AT ZERO PERCENT GRADE OR AS NEAR AS POSSIBLE.

6. THE ENDS OF THE BERM SHOULD BE TIED INTO EXISTING UPSLOPE GRADE AND THE BERM SHOULD BE BURIED IN A TRENCH APPROXIMATELY 3 TO 4 INCHES DEEP TO PREVENT FAILURE OF THE CONTROL.

COMMON TROUBLE POINTS

1. INSUFFICIENT BERM HEIGHT OR LENGTH (RUNOFF QUICKLY ESCAPES OVER THE TOP OR AROUND THE SIDES OF BERM).

2. BERM NOT INSTALLED PERPENDICULAR TO FLOW LINE (RUNOFF ESCAPING AROUND ONE SIDE).

ROCK BERM DETAIL

NOT-TO-SCALE

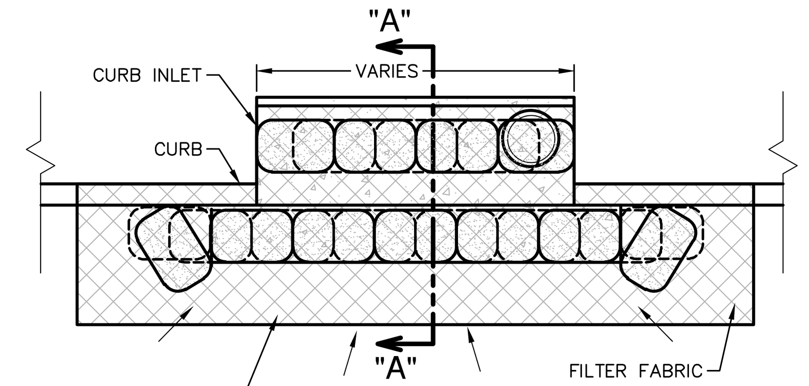

PLAN VIEW

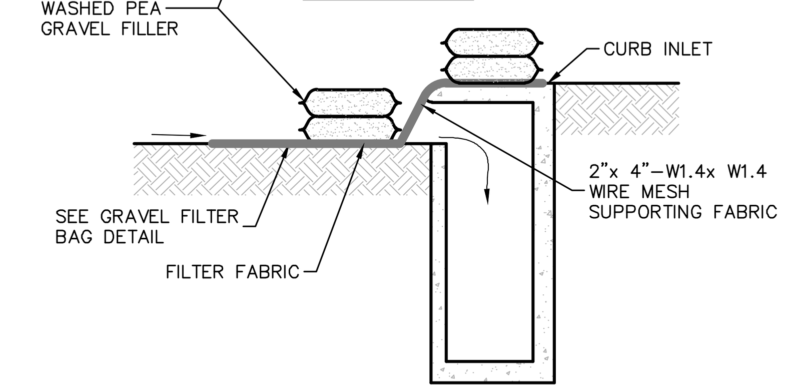

SECTION "A-A"

GENERAL NOTES

1. CONTRACTOR TO INSTALL 2"x4"–W1.4xW1.4 WIRE MESH SUPPORTING FILTER FABRIC OVER THE INLET OPENING. FABRIC MUST BE SECURED TO WIRE BACKING WITH CLIPS OR WIRE TIES AT THIS LOCATION. SAND BAGS FILLED WITH WASHED PEA GRAVEL SHOULD BE PLACED ON TOP OF WIRE MESH ON TOP OF THE INLET AS SHOWN ON THIS DETAIL TO HOLD WIRE MESH IN PLACE. SANDBAGS FILLED WITH WASHED PEA GRAVEL SHOULD ALSO BE PLACED ALONG THE GUTTER AS SHOWN ON THIS DETAIL TO HOLD WIRE MESH IN PLACE. SAND BAGS TO BE STACKED TO FORM A CONTINUOUS BARRIER AROUND INLETS.

2. THE BAGS SHOULD BE TIGHTLY ABUTTED AGAINST EACH OTHER TO PREVENT RUNOFF FROM FLOWING BETWEEN THE BAGS.

INSPECTION AND MAINTENANCE GUIDELINES

1. INSPECTION SHOULD BE MADE WEEKLY AND AFTER EACH RAINFALL. REPAIR OR REPLACEMENT SHOULD BE MADE PROMPTLY AS NEEDED BY THE CONTRACTOR.

2. REMOVE SEDIMENT WHEN BUILDUP REACHES A DEPTH OF 3 INCHES. REMOVED SEDIMENT SHOULD BE DEPOSITED IN A SUITABLE AREA AND IN SUCH A MANNER THAT IT WILL NOT ERODE.

3. CHECK PLACEMENT OF DEVICE TO PREVENT GAPS BETWEEN DEVICE AND CURB.

4. INSPECT FILTER FABRIC AND PATCH OR REPLACE IF TORN OR MISSING.

5. STRUCTURES SHOULD BE REMOVED AND THE AREA STABILIZED ONLY AFTER THE REMAINING DRAINAGE AREA HAS BEEN PROPERLY STABILIZED.

BAGGED GRAVEL CURB INLET PROTECTION DETAIL

NOT-TO-SCALE

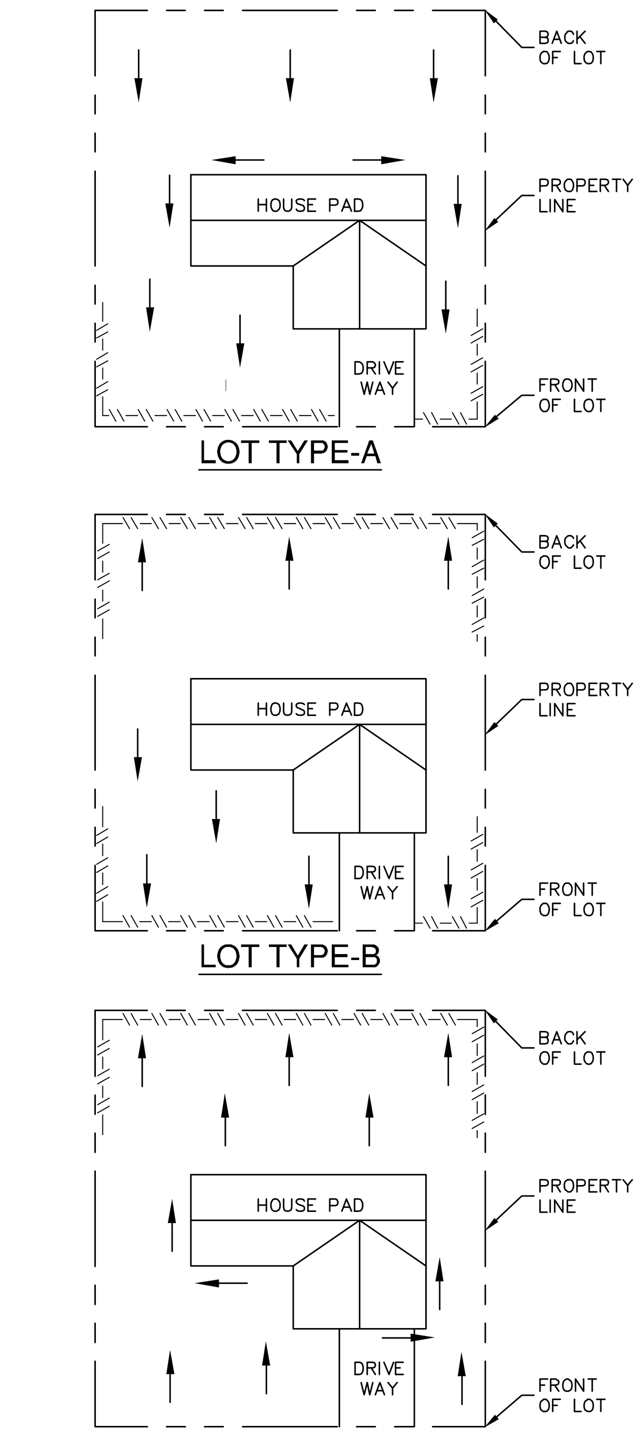

NOTE: SILT FENCE TO BE INSTALLED PER THESE DETAILS AND LOCATED ON THE DOWNGRADIENT SIDE OF EACH LOT LINE OR LIMITS OF CLEARING AS GENERALLY SHOWN ON THE OVERALL SITE PLAN.

LEGEND
—\\—\\—\\— SILT FENCE
← DRAINAGE FLOW

TYPICAL HOUSE LOT LAYOUTS

NOT-TO-SCALE

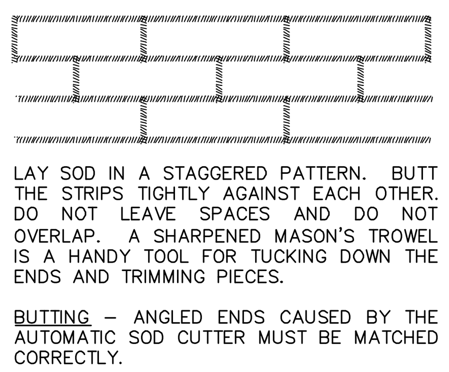

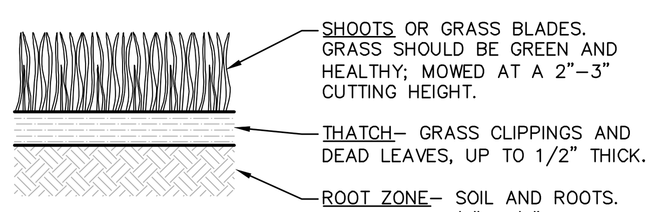

APPEARANCE OF GOOD SOD

NOTES:

1. ROLL SOD IMMEDIATELY TO ACHIEVE FIRM CONTACT WITH THE SOIL.

2. WATER TO A DEPTH OF 4" AS NEEDED. WATER WELL AS SOON AS THE SOD IS LAID.

3. MOW WHEN THE SOD IS ESTABLISHED – IN 2–3 WEEKS. SET THE MOWER HIGH (2"–3").

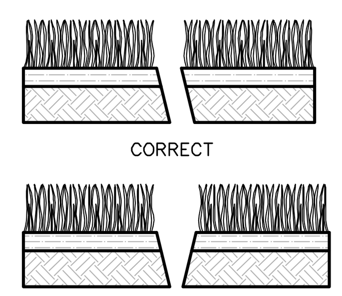

SOD INSTALLATION

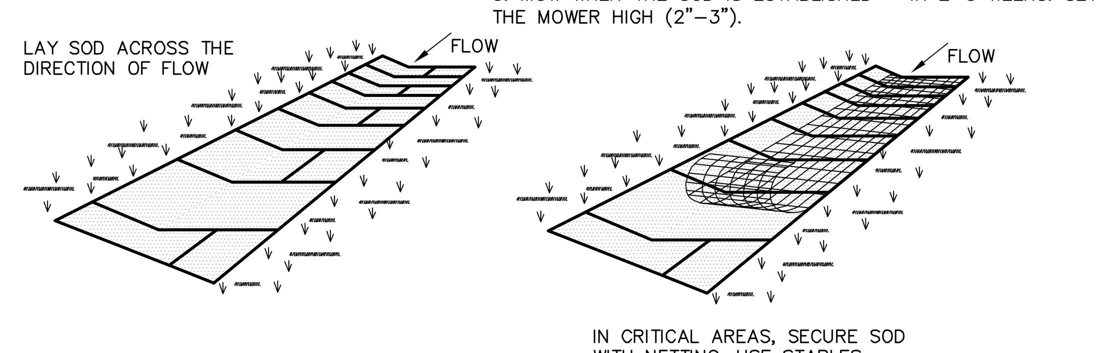

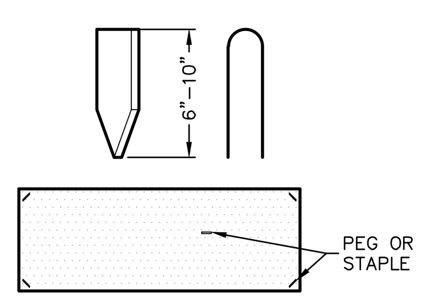

USE PEGS OR STAPLES TO FASTEN SOD FIRMLY – AT THE ENDS OF STRIPS AND IN THE CENTER, OR EVERY 3–4 FEET IF THE STRIPS ARE LONG. WHEN READY TO MOW, DRIVE PEGS OR STAPLES FLUSH WITH THE GROUND.

MATERIALS

1. SOD SHOULD BE MACHINE CUT AT A UNIFORM SOIL THICKNESS OF 3/4" INCH (± 1/4" INCH) AT THE TIME OF CUTTING. THIS THICKNESS SHOULD EXCLUDE SHOOT GROWTH AND THATCH.

2. PIECES OF SOD SHOULD BE CUT TO THE SUPPLIER'S STANDARD WIDTH AND LENGTH, WITH A MAXIMUM ALLOWABLE DEVIATION IN ANY DIMENSION OF 5%. TORN OR UNEVEN PADS SHOULD NOT BE ACCEPTABLE.

3. STANDARD SIZE SECTIONS OF SOD SHOULD BE STRONG ENOUGH TO SUPPORT THEIR OWN WEIGHT AND RETAIN THEIR SIZE AND SHAPE WHEN SUSPENDED FROM A FIRM GRASP ON ONE END OF THE SECTION.

4. SOD SHOULD BE HARVESTED, DELIVERED, AND INSTALLED WITHIN A PERIOD OF 36 HOURS.

SITE PREPARATION

1. PRIOR TO SOIL PREPARATION, AREAS TO BE SODDED SHOULD BE BROUGHT TO FINAL GRADE IN ACCORDANCE WITH THE APPROVED PLAN.

2. THE SURFACE SHOULD BE CLEARED OF ALL TRASH, DEBRIS AND OF ALL ROOTS, BRUSH, WIRE, GRADE STAKES AND OTHER OBJECTS THAT WOULD INTERFERE WITH PLANTING, FERTILIZING OR MAINTENANCE OPERATIONS.

3. FERTILIZE ACCORDING TO SOIL TESTS. FERTILIZER NEEDS CAN BE DETERMINED BY A SOIL TESTING LABORATORY OR REGIONAL RECOMMENDATIONS CAN BE MADE BY COUNTY AGRICULTURAL EXTENSION AGENTS. FERTILIZER SHOULD BE WORKED INTO THE SOIL TO A DEPTH OF 3 INCHES WITH A DISC, SPRINGTOOTH HARROW OR OTHER SUITABLE EQUIPMENT. ON SLOPING LAND, THE FINAL HARROWING OR DISCING OPERATION SHOULD BE ON THE CONTOUR.

INSTALLATION IN CHANNELS

1. SOD STRIPS IN WATERWAYS SHOULD BE LAID PERPENDICULAR TO THE DIRECTION OF FLOW. CARE SHOULD BE TAKEN TO BUTT ENDS OF STRIPS TIGHTLY (SEE FIGURE ABOVE).

2. AFTER ROLLING OR TAMPING, SOD SHOULD BE PEGGED OR STAPLED TO RESIST WASHOUT DURING THE ESTABLISHMENT PERIOD. MESH OR OTHER NETTING MAY BE PEGGED OVER THE SOD FOR EXTRA PROTECTION IN CRITICAL AREAS.

GENERAL INSTALLATION (VA. DEPT. OF CONSERVATION, 1992)

1. SOD SHOULD NOT BE CUT OR LAID IN EXCESSIVELY WET OR DRY WEATHER. SOD ALSO SHOULD NOT BE LAID ON SOIL SURFACES THAT ARE FROZEN.

2. DURING PERIODS OF HIGH TEMPERATURE, THE SOIL SHOULD BE LIGHTLY IRRIGATED IMMEDIATELY PRIOR TO LAYING THE SOD, TO COOL THE SOIL AND REDUCE ROOT BURNING AND DIEBACK.

3. THE FIRST ROW OF SOD SHOULD BE LAID IN A STRAIGHT LINE WITH SUBSEQUENT ROWS PLACED PARALLEL TO AND BUTTING TIGHTLY AGAINST EACH OTHER. LATERAL JOINTS SHOULD BE STAGGERED TO PROMOTE MORE UNIFORM GROWTH AND STRENGTH. CARE SHOULD BE EXERCISED TO ENSURE THAT SOD IS NOT STRETCHED OR OVERLAPPED AND THAT ALL JOINTS ARE BUTTED TIGHT IN ORDER TO PREVENT VOIDS WHICH WOULD CAUSE DRYING OF THE ROOTS (SEE FIGURE ABOVE).

4. ON SLOPES 3:1 OR GREATER, OR WHEREVER EROSION MAY BE A PROBLEM, SOD SHOULD BE LAID WITH STAGGERED JOINTS AND SECURED BY STAPLING OR OTHER APPROVED METHODS. SOD SHOULD BE INSTALLED WITH THE LENGTH PERPENDICULAR TO THE SLOPE (ON CONTOUR).

5. AS SODDING OF CLEARLY DEFINED AREAS IS COMPLETED, SOD SHOULD BE ROLLED OR TAMPED TO PROVIDE FIRM CONTACT BETWEEN ROOTS AND SOIL.

6. AFTER ROLLING, SOD SHOULD BE IRRIGATED TO A DEPTH SUFFICIENT THAT THE UNDERSIDE OF THE SOD PAD AND THE SOIL 4 INCHES BELOW THE SOD IS THOROUGHLY WET.

7. UNTIL SUCH TIME A GOOD ROOT SYSTEM BECOMES DEVELOPED, IN THE ABSENCE OF ADEQUATE RAINFALL, WATERING SHOULD BE PERFORMED AS OFTEN AS NECESSARY TO MAINTAIN MOIST SOIL TO A DEPTH OF AT LEAST 4 INCHES.

8. THE FIRST MOWING SHOULD NOT BE ATTEMPTED UNTIL THE SOD IS FIRMLY ROOTED, USUALLY 2–3 WEEKS. NOT MORE THAN ONE THIRD OF THE GRASS LEAF SHOULD BE REMOVED AT ANY ONE CUTTING.

INSPECTION AND MAINTENANCE GUIDELINES

1. SOD SHOULD BE INSPECTED WEEKLY AND AFTER EACH RAIN EVENT TO LOCATE AND REPAIR ANY DAMAGE.

2. DAMAGE FROM STORMS OR NORMAL CONSTRUCTION ACTIVITIES SUCH AS TIRE RUTS OR DISTURBANCE OF SWALE STABILIZATION SHOULD BE REPAIRED AS SOON AS PRACTICAL.

SOD INSTALLATION DETAIL

NOT-TO-SCALE

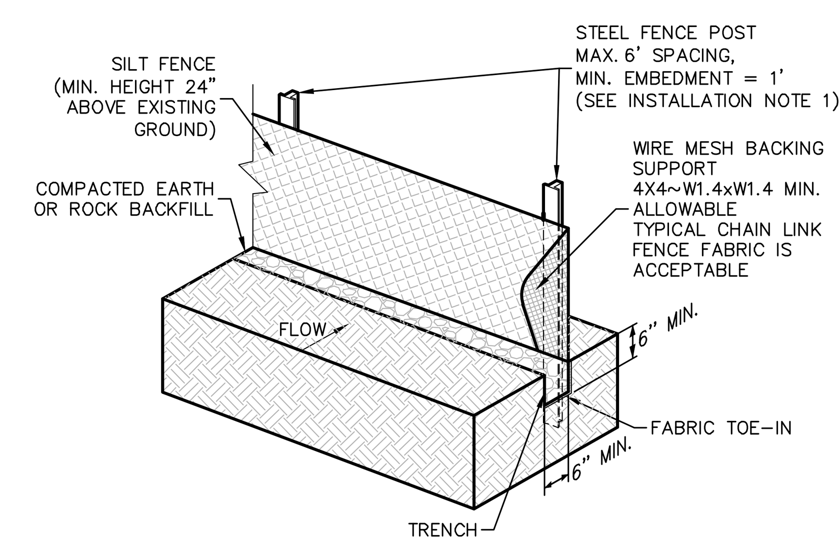

ISOMETRIC PLAN VIEW

SILT FENCE

A SILT FENCE IS A BARRIER CONSISTING OF GEOTEXTILE FABRIC SUPPORTED BY METAL POSTS TO PREVENT SOIL AND SEDIMENT LOSS FROM A SITE. WHEN PROPERLY USED, SILT FENCES CAN BE HIGHLY EFFECTIVE AT CONTROLLING SEDIMENT FROM DISTURBED AREAS. THEY CAUSE RUNOFF TO POND, ALLOWING HEAVIER SOLIDS TO SETTLE OUT. IF NOT PROPERLY INSTALLED, SILT FENCES ARE NOT LIKELY TO BE EFFECTIVE.

THE PURPOSE OF A SILT FENCE IS TO INTERCEPT AND DETAIN WATER-BORN SEDIMENT FROM UNPROTECTED AREAS OF A LIMITED EXTENT. SILT FENCE IS USED DURING THE PERIOD OF CONSTRUCTION NEAR THE PERIMETER OF A DISTURBED AREA TO INTERCEPT SEDIMENT WHILE ALLOWING WATER TO PERCOLATE THROUGH. THIS FENCE SHOULD REMAIN IN PLACE UNTIL THE DISTURBED AREA IS PERMANENTLY STABILIZED. SILT FENCE SHOULD NOT BE USED WHERE THERE IS A CONCENTRATION OF WATER IN A CHANNEL OR DRAINAGE WAY. IF CONCENTRATED FLOW OCCURS AFTER INSTALLATION, CORRECTIVE ACTION MUST BE TAKEN SUCH AS PLACING A ROCK BERM IN THE AREAS OF CONCENTRATED FLOW.

SILT FENCING WITHIN THE SITE MAY BE TEMPORARILY MOVED DURING THE DAY TO ALLOW CONSTRUCTION ACTIVITY PROVIDED IT IS REPLACED AND PROPERLY ANCHORED TO THE GROUND AT THE END OF THE DAY. SILT FENCES ON THE PERIMETER OF THE SITE OR AROUND DRAINAGE WAYS SHOULD NOT BE MOVED AT ANY TIME.

MATERIALS

1. SILT FENCE MATERIAL SHOULD BE POLYPROPYLENE, POLYETHYLENE, OR POLYAMIDE WOVEN OR NONWOVEN FABRIC. THE FABRIC SHOULD BE 36 INCHES, WITH A MINIMUM UNIT WEIGHT OF 4.5 OZ/YD, MULLEN BURST STRENGTH EXCEEDING 190 LB/IN2, ULTRAVIOLET STABILITY EXCEEDING 70%, AND MINIMUM APPARENT OPENING SIZE OF U.S. SIEVE NUMBER 30.

2. FENCE POSTS SHOULD BE MADE OF HOT ROLLED STEEL, AT LEAST 4 FEET LONG WITH TEE OR Y-BAR CROSS SECTION, SURFACE PAINTED OR GALVANIZED, MINIMUM WEIGHT 1.25 LB/FT, AND BRINDELL HARDNESS EXCEEDING 140.

3. WOVEN WIRE BACKING TO SUPPORT THE FABRIC SHOULD BE GALVANIZED 2" X 4" WELDED WIRE, 12 GAUGE MINIMUM.

INSTALLATION

1. STEEL POSTS, WHICH SUPPORT THE SILT FENCE, SHOULD BE INSTALLED ON A SLIGHT ANGLE TOWARD THE ANTICIPATED RUNOFF SOURCE. POSTS MUST BE EMBEDDED A MINIMUM OF 1-FOOT DEEP AND SPACED NOT MORE THAN 8 FEET ON CENTER. WHERE WATER CONCENTRATES, THE MAXIMUM SPACING SHOULD BE 6 FEET.

2. LAY OUT FENCING DOWN-SLOPE OF DISTURBED AREA, FOLLOWING THE CONTOUR AS CLOSELY AS POSSIBLE. THE FENCE SHOULD BE SITED SO THAT THE MAXIMUM DRAINAGE AREA IS ¼ ACRE/100 FEET OF FENCE.

3. THE TOE OF THE SILT FENCE SHOULD BE TRENCHED IN WITH A SPADE OR MECHANICAL TRENCHER, SO THAT THE DOWN-SLOPE FACE OF THE TRENCH IS FLAT AND PERPENDICULAR TO THE LINE OF FLOW. WHERE FENCE CANNOT BE TRENCHED IN (E.G., PAVEMENT OR ROCK OUTCROP), WEIGHT FABRIC FLAP WITH 3 INCHES OF PEA GRAVEL ON UPHILL SIDE TO PREVENT FLOW FROM SEEPING UNDER FENCE.

4. THE TRENCH MUST BE A MINIMUM OF 6 INCHES DEEP AND 6 INCHES WIDE TO ALLOW FOR THE SILT FENCE FABRIC TO BE LAID IN THE GROUND AND BACKFILLED WITH COMPACTED MATERIAL.

5. SILT FENCE SHOULD BE SECURELY FASTENED TO EACH STEEL SUPPORT POST OR TO WOVEN WIRE, WHICH IS IN TURN ATTACHED TO THE STEEL FENCE POST. THERE SHOULD BE A 3-FOOT OVERLAP, SECURELY FASTENED WHERE ENDS OF FABRIC MEET.

6. SILT FENCE SHOULD BE REMOVED WHEN THE SITE IS COMPLETELY STABILIZED SO AS NOT TO BLOCK OR IMPEDE STORM FLOW OR DRAINAGE.

COMMON TROUBLE POINTS

1. FENCE NOT INSTALLED ALONG THE CONTOUR CAUSING WATER TO CONCENTRATE AND FLOW OVER THE FENCE.

2. FABRIC NOT SEATED SECURELY TO GROUND (RUNOFF PASSING UNDER FENCE).

3. FENCE NOT INSTALLED PERPENDICULAR TO FLOW LINE (RUNOFF ESCAPING AROUND SIDES).

4. FENCE TREATING TOO LARGE AN AREA, OR EXCESSIVE CHANNEL FLOW (RUNOFF OVERTOPS OR COLLAPSES FENCE).

INSPECTION AND MAINTENANCE GUIDELINES

1. INSPECT ALL FENCING WEEKLY, AND AFTER RAINFALL.

2. REMOVE SEDIMENT WHEN BUILDUP REACHES 6 INCHES.

3. REPLACE TORN FABRIC OR INSTALL A SECOND LINE OF FENCING PARALLEL TO THE TORN SECTION.

4. REPLACE OR REPAIR SECTIONS CRUSHED OR COLLAPSED IN THE COURSE OF CONSTRUCTION ACTIVITY. IF A SECTION OF FENCE IS OBSTRUCTING VEHICULAR ACCESS, CONSIDER RELOCATING IT TO A SPOT WHERE IT WILL PROVIDE EQUAL PROTECTION, BUT WILL NOT OBSTRUCT VEHICLES. A TRIANGULAR FILTER DIKE MAY BE PREFERABLE TO A SILT FENCE AT COMMON VEHICLE ACCESS POINTS.

5. WHEN CONSTRUCTION IS COMPLETE, THE SEDIMENT SHOULD BE DISPOSED OF IN A MANNER THAT WILL NOT CAUSE ADDITIONAL SILTATION AND THE PRIOR LOCATION OF THE SILT FENCE SHOULD BE REVEGETATED. THE FENCE ITSELF SHOULD BE DISPOSED OF IN AN APPROVED LANDFILL.

SILT FENCE DETAIL

NOT-TO-SCALE

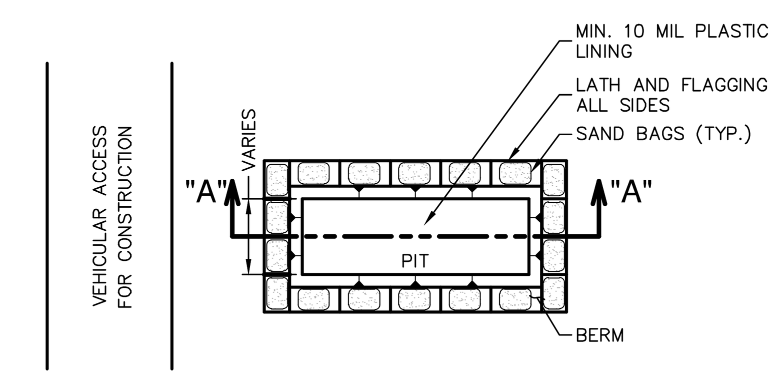

PLAN VIEW

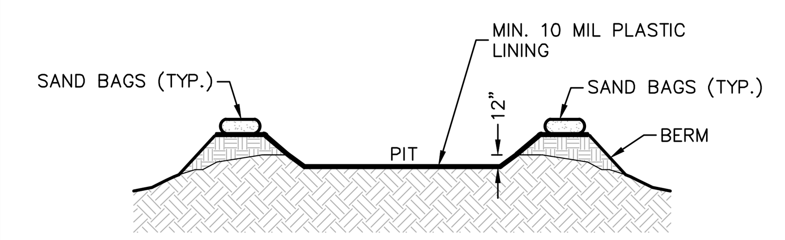

SECTION "A-A"

GENERAL NOTES

1. DETAIL ABOVE ILLUSTRATES MINIMUM DIMENSIONS. PIT CAN BE INCREASED IN SIZE DEPENDING ON EXPECTED FREQUENCY OF USE.

2. WASHOUT PIT SHALL BE LOCATED IN AN AREA EASILY ACCESSIBLE TO CONSTRUCTION TRAFFIC.

3. WASHOUT PIT SHALL NOT BE LOCATED IN AREAS SUBJECT TO INUNDATION FROM STORM WATER RUNOFF.

4. LOCATE WASHOUT AREA AT LEAST 50 FEET FROM SENSITIVE FEATURES, STORM DRAINS, OPEN DITCHES OR WATER BODIES.

5. TEMPORARY CONCRETE WASHOUT FACILITY SHOULD BE CONSTRUCTED WITH SUFFICIENT QUANTITY AND VOLUME TO CONTAIN ALL LIQUID AND CONCRETE WASTE GENERATED BY WASHOUT OPERATIONS.

MATERIALS

PLASTIC LINING MATERIAL SHOULD BE A MINIMUM OF 10 MIL IN POLYETHYLENE SHEETING AND SHOULD BE FREE OF HOLES, TEARS, OR OTHER DEFECTS THAT COMPROMISE THE IMPERMEABILITY OF THE MATERIAL.

MAINTENANCE

1. WHEN TEMPORARY CONCRETE WASHOUT FACILITIES ARE NO LONGER REQUIRED FOR THE WORK, THE HARDENED CONCRETE SHOULD BE REMOVED AND DISPOSED OF.

2. MATERIALS USED TO CONSTRUCT TEMPORARY CONCRETE WASHOUT FACILITIES SHOULD BE REMOVED FROM THE SITE OF THE WORK AND DISPOSED OF.

3. HOLES, DEPRESSIONS OR OTHER GROUND DISTURBANCES CAUSED BY THE REMOVAL OF THE TEMPORARY CONCRETE WASHOUT FACILITIES SHOULD BE BACKFILLED AND REPAIRED.

CONCRETE TRUCK WASHOUT PIT DETAIL

NOT-TO-SCALE

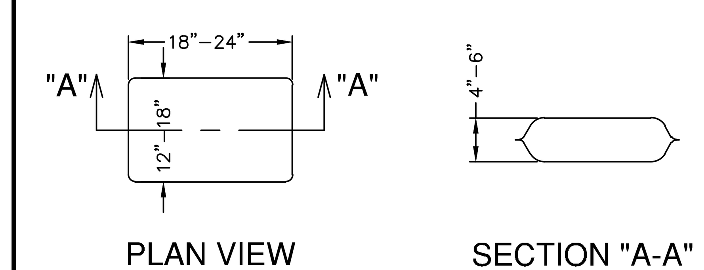

NOTES:

1. THE FILTER BAG MATERIAL SHALL BE MADE OF POLYPROPYLENE, POLYETHYLENE OR POLYAMIDE WOVEN FABRIC, MIN. UNIT WEIGHT OF 4 OUNCES/SY, HAVE A MULLEN BURST STRENGTH EXCEEDING 300 PSI AND ULTRAVIOLET STABILITY EXCEEDING 70%.

2. THE FILTER BAG SHALL BE FILLED WITH CLEAN, MEDIUM WASHED PEA GRAVEL TO COARSE GRAVEL (0.31 TO 0.75 INCH DIAMETER).

3. SAND SHALL NOT BE USED TO FILL THE FILTER BAGS.

GRAVEL FILTER BAG DETAIL

NOT-TO-SCALE

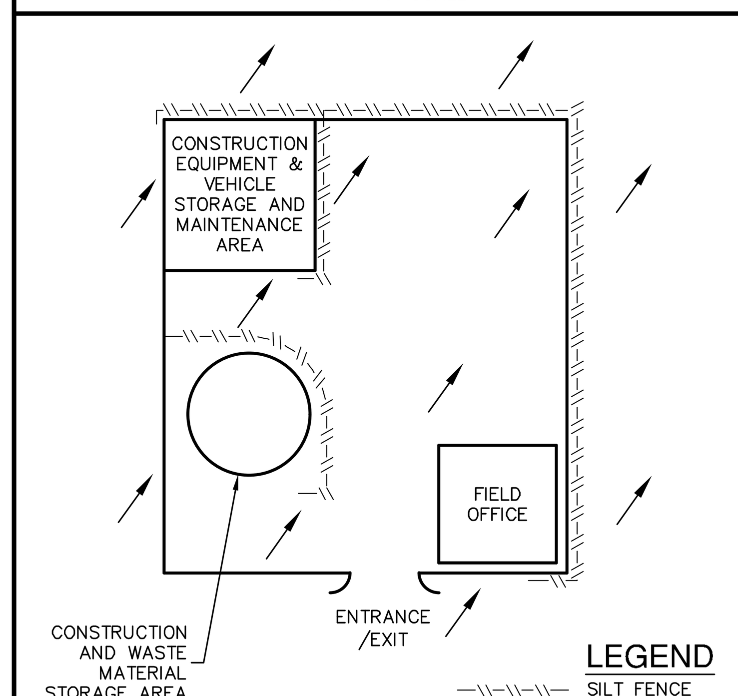

LEGEND
—\\—\\—\\— SILT FENCE
← FLOW ARROWS

CONSTRUCTION STAGING AREA

NOT-TO-SCALE

THE ENGINEERING SEAL HAS BEEN AFFIXED TO THIS SHEET ONLY FOR THE PURPOSE OF DEMONSTRATING COMPLIANCE WITH THE TPDES-STORM WATER POLLUTION PREVENTION PLAN (SWP3) REGULATIONS.

THIS SHEET HAS BEEN PREPARED FOR PURPOSES OF THE SWP3 ONLY. ALL OTHER CIVIL ENGINEERING RELATED INFORMATION SHOULD BE ACQUIRED FROM THE APPROPRIATE SHEET IN THE CIVIL IMPROVEMENT PLANS.

NO.	REVISION	DATE

4/13/2023

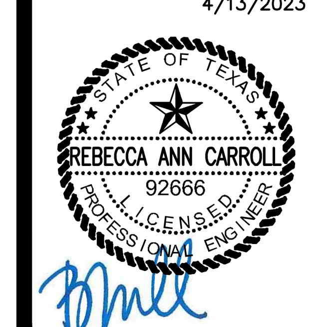

PAPE-DAWSON ENGINEERS
SAN ANTONIO | AUSTIN | HOUSTON | FORT WORTH | DALLAS
2000 NW LOOP 410 | SAN ANTONIO, TX 78213 | 210.375.9000
TEXAS ENGINEERING FIRM #470 | TEXAS SURVEYING FIRM #10028800

SPANISH TRAILS-UNIT 2 EAST

SAN ANTONIO, TEXAS

STORMWATER POLLUTION PREVENTION DETAILS

PLAT NO. 22-11800121
JOB NO. 12044–05
DATE APRIL 2023
DESIGNER AC
CHECKED ____ DRAWN AC
SHEET C8.10