STONEHILL UNITS 6B & 8

SAN ANTONIO, TEXAS

CIVIL CONSTRUCTION PLANS

Sheet List Table

Sheet Description	Sheet No.
COVER SHEET	C0.00
MASTER DRAINAGE PLAN	C1.00
DRAIN A & A-1 PLAN & PROFILE	C1.01
DRAIN B & B-1 PLAN & PROFILE	C1.02
PRIVATE V-SWALE DETAILS	C1.03
DRAINAGE DETAILS	C1.10
DRAINAGE DETAILS	C1.11
DRAINAGE DETAILS	C1.12
DALLAM COVE PLAN & PROFILE (STA. 1+40.00 TO END)	C2.00
HANSFORD POINT PLAN & PROFILE (STA. 6+83.30 TO END)	C2.01
LIPSCOMB FALLS PLAN & PROFILE (STA. 1+38.39 TO END)	C2.02
MOTLEY COVE PLAN & PROFILE (STA. 5+35.00 TO END)	C2.03
WHEELER GLEN PLAN & PROFILE (STA. 1+52.95 TO END)	C2.04
WICHITA ROCK PLAN & PROFILE (STA. 5+48.82 TO END)	C2.05
TYPICAL STREET DETAILS	C2.10
TYPICAL STREET DETAILS	C2.11
TYPICAL STREET DETAILS	C2.12
OVERALL SIGNAGE PLAN	C3.00
OVERALL SIGNAGE PLAN	C3.01
SIGNAGE DETAILS SHEET 1 OF 2	C3.10
SIGNAGE DETAILS SHEET 2 OF 2	C3.11

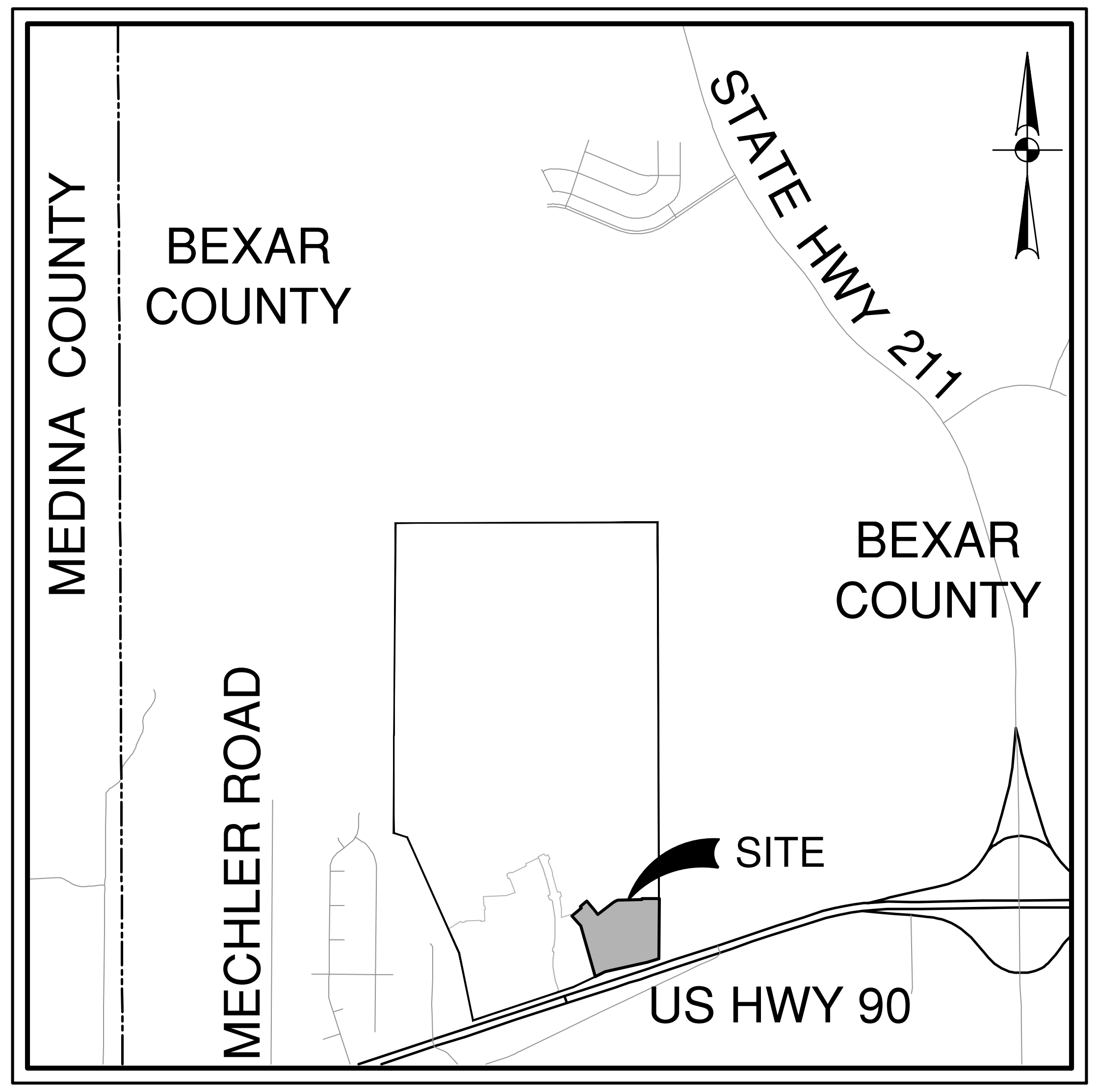

LOCATION MAP
NOT-TO-SCALE

Sheet List Table

Sheet Description	Sheet No.
OVERALL WATER DISTRIBUTION PLAN	C4.00
OVERALL WATER DISTRIBUTION PLAN	C4.01
WATER DISTRIBUTION PLAN DETAILS	C4.10
WATER DISTRIBUTION PLAN NOTES	C4.11
OVERALL SANITARY SEWER PLAN	C5.00
OVERALL SANITARY SEWER PLAN	C5.01
SANITARY SEWER LINE A PLAN & PROFILE (STA. 1+00 TO 12+00)	C5.02
SANITARY SEWER LINE A PLAN & PROFILE (STA. 12+00 TO END)	C5.03
SANITARY SEWER LINE B PLAN & PROFILE	C5.04
SANITARY SEWER LINE C AND D PLAN & PROFILE	C5.05
SANITARY SEWER DETAILS	C5.10
SANITARY SEWER NOTES	C5.11
OVERALL UTILITY PLAN	C6.00
OVERALL UTILITY PLAN	C6.01
OVERALL GRADING PLAN	C7.00
STORM WATER POLLUTION PREVENTION PLAN	C8.00
STORM WATER POLLUTION PREVENTION PLAN DETAILS	C8.10

PREPARED FOR:

CONTINENTAL HOMES OF TEXAS, L.P.
5419 N LOOP 1604
SAN ANTONIO, TEXAS 78218

NOVEMBER 2024

CALEB M. CHANCE
98401

2/14/25

PAPE-DAWSON ENGINEERS

2000 NW LOOP 410 I SAN ANTONIO, TX 78213 I 210.375.9000
TEXAS ENGINEERING FIRM #470 I TEXAS SURVEYING FIRM #10028800

WATER (SAWS PRESSURE ZONE 930)

DEVELOPER'S NAME: CONTINENTAL HOMES OF TEXAS, L.P.
ADDRESS: 5419 N LOOP 1604
CITY: SAN ANTONIO STATE: TEXAS ZIP: 78218
PHONE# (210) 496-2668 FAX# (210) 490-2668
SAWS BLOCK MAP# 068558, 068560 TOTAL EDU'S 112 TOTAL ACREAGE 21.9
TOTAL LINEAR FOOTAGE OF PIPE: 8"-3753' PLAT NO. 24-11800437
NUMBER OF LOTS 112 SAWS JOB NO. 24-1177

SEWER

DEVELOPER'S NAME: CONTINENTAL HOMES OF TEXAS, L.P.
ADDRESS: 5419 N LOOP 1604
CITY: SAN ANTONIO STATE: TEXAS ZIP: 78218
PHONE# (210) 496-2668 FAX#
SAWS BLOCK MAP# 68558, 68560 TOTAL EDU'S 112 TOTAL ACREAGE 21.9
TOTAL LINEAR FOOTAGE OF PIPE: 8" 3322 LF PLAT NO. 24-11800437
NUMBER OF LOTS 112 SAWS JOB NO. 24-1650

SHEET C0.00

PLAT NO.24-11800437PD JOB NO. 12456-14 STONEHILL UNITS 6B & 8

Date: Feb 14, 2025, 8:12am User ID: Richardgarcia
File: P:\124\56\14\Design\Civil\CV-1245614.dwg

STONEHILL UNIT 2B&6A - PROPOSED CONDITIONS DRAINAGE SUMMARY TABLE

					Overland Flow				Shallow Concentrated								Channel Flow		Total						Curb Inlet	
Point	Structure	Area	Total Flow Length (ft)	Total Area (ac)	Character of Ground	Slope %	L (ft)	Tc (min)	Surface	Slope %	L (ft)	Tc (min)	Surface	Slope %	L (ft)	Tc (min)	L (ft)	Tc (min)	Tc (min)	C	I	Q (cfs)	Frequency (yrs)	Total Q_{25} (Q-Intercept/Bypass)	Intercept	Bypass
1	FUTURE STREET CAPACITY	A1	1820	4.84	Avg. Grass	2.00%	87	11	Short Grass Pasture	-	-	-	Paved	2.00%	1733	10.0	-	-	21	0.72	4.40	15.3	5			
																					6.05	**21.1**	**25**			
																					7.52	26.2	100			
2	FUTURE CURB INLETS IN-SUMP	A1+A3	2090	7.98	Avg. Grass	2.00%	87	11	Short Grass Pasture	-	-	-	Paved	2.10%	2003	11.3	-	-	22	0.72	4.30	24.7	5	Q = 24.7 - 15.64 = 9.06 cfs		
																					5.91	**34.0**	**25**	**Q = 34.0 - 16.8 = 17.20 cfs**		
																					7.34	42.2	100	Q = 42.2 - 17.74 = 24.46 cfs		
3	FUTURE CURB INLETS ON-GRADE	A2	1114	6.31	Avg. Grass	2.00%	100	12	Short Grass Pasture	2.00%	152	2.6	Paved	3.50%	862	3.8	-	-	18	0.72	4.76	21.6	5		15.64	5.96
																					6.56	**29.8**	**25**		**16.80**	**13.00**
																					8.16	37.1	100		17.74	19.36
4	DRAIN C	A1+A2+A3	2090	14.29	Avg. Grass	2.00%	87	11	Short Grass Pasture	-	-	-	Paved	2.10%	2003	11.3	-	-	22	0.72	4.30	44.2	5			
																					5.91	**60.8**	**25**			
																					7.34	75.5	100			
5	STREET CAPACITY	B1	692	2.60	Avg. Grass	2.00%	100	12	Short Grass Pasture	2.00%	44	0.7	Paved	2.50%	548	2.8	-	-	15	0.72	5.24	9.8	5			
																					7.24	**13.6**	**25**			
																					9.03	16.9	100			
6	STREET CAPACITY / STREET INTERCEPT	B1+B2	960	4.13	Avg. Grass	2.00%	100	12	Short Grass Pasture	2.00%	44	0.7	Paved	3.30%	816	3.7	-	-	16	0.72	5.06	15.0	5		5.94	9.06
																					6.99	**20.8**	**25**		**7.10**	**13.70**
																					8.71	25.9	100		7.86	18.04
8	CURB INLETS ON-GRADE	B1+B2+B3	1827	12.58	Avg. Grass	2.00%	100	12	Short Grass Pasture	2.00%	44	0.7	Paved	3.10%	1683	7.8	-	-	20	0.72	4.51	40.8	5	Q = 40.8 - 9.06 = 31.74 cfs	12.72	17.88
																					6.21	**56.2**	**25**	**Q = 56.2 - 13.70 = 42.50 cfs**	**13.68**	**26.90**
																					7.71	69.8	100	Q = 69.8 - 18.04 = 51.76 cfs	14.50	35.10
9	CURB INLET IN SUMP	B1+B2+B3+B4	1963	12.58	Avg. Grass	2.00%	100	12	Short Grass Pasture	2.00%	44	0.7	Paved	2.90%	1793	8.6	-	-	21	0.72	4.40	39.9	5	Q = 39.9 - 5.94 - 12.72 = 21.24 cfs		
																					6.05	**54.8**	**25**	**Q = 54.8 - 7.10 - 13.68 = 34.02 cfs**		
																					7.52	68.1	100	Q = 68.1 - 7.86 -14.50 = 45.74 cfs		
10	DRAIN OUTFALL	A1+A2+A3+B1+B2+B3+B4	2411	26.87	Avg. Grass	2.00%	87	11	Short Grass Pasture	-	-	-	Paved	2.00%	2298	13.3	-	-	24	0.72	4.12	79.7	5	Q = 79.7 -9.06 = 70.64 cfs		
																					5.65	**109.3**	**25**	**Q = 109.3 - 13.7 = 95.60 cfs**		
																					7.01	135.6	100	Q = 135.6 - 18.04 = 117.56 cfs		
11A	CURB INLETS ON-GRADE	B1+B2+C1	1699	9.87	Avg. Grass	2.00%	100	12	Short Grass Pasture	2.00%	44	0.7	Paved	3.40%	1555	6.9	-	-	19	0.72	4.63	32.9	5	Q = 32.9 - 5.94 = 26.96 cfs	16.78	12.92
																					6.37	**45.3**	**25**	**Q = 45.3 - 7.10 = 38.20 cfs**	**18.38**	**23.84**
																					7.93	56.4	100	Q = 56.4 - 7.86 = 48.54 cfs	19.70	33.90
11B	CURB INLETS IN-SUMP	B1+B2+C1	1699	9.87	Avg. Grass	2.00%	100	12	Short Grass Pasture	2.00%	44	0.7	Paved	3.40%	1555	6.9	-	-	19	0.72	4.63	32.9	5	Q = 32.9 - 5.94 - 12.72 = 14.24 cfs		
																					6.37	**45.3**	**25**	**Q = 45.3 - 7.10 - 13.68 = 24.22 cfs**		
																					7.93	56.4	100	Q = 56.4 - 7.86 - 14.50 = 34.04 cfs		
13	CURB INLET IN SUMP	B1+B2+C1+C2+C3	2075	18.89	Avg. Grass	2.00%	100	12	Short Grass Pasture	2.00%	44	0.7	Paved	3.10%	1931	9.0	-	-	21	0.72	4.40	59.8	5	Q = 59.8- 5.94- 12.72 - 16.78 -14.24 = 10.12 cfs		
																					6.05	**82.3**	**25**	**Q = 82.3 - 7.10 - 13.68 - 18.38 - 24.22 = 18.92 cfs**		
																					7.52	102.3	100	Q = 102.3- 7.86 - 14.5 - 19.70 - 34.04 = 26.2 cfs		
14	DRAIN OUTFALL	B1+B2+C1+C2+C3	2075	18.89	Avg. Grass	2.00%	100	12	Short Grass Pasture	2.00%	44	0.7	Paved	3.10%	1931	9.0	-	-	21	0.72	4.40	59.8	5	Q = 59.8 - 5.94 = 53.86 cfs		
																					6.05	**82.3**	**25**	**Q = 82.3 - 7.1 = 75.20 cfs**		
																					7.52	102.3	100	Q = 102.3 - 7.86 = 94.44 cfs		
15	DRAIN B	A1+A2+A3+B1+B2+B3+B4	2385	26.87	Avg. Grass	2.00%	87	11	Short Grass Pasture	-	-	-	Paved	2.00%	2298	13.3	-	-	24	0.72	4.12	79.7	5	Q = 79.7 - 17.88 = 60.62 cfs		
																					5.65	**109.3**	**25**	**Q = 109.3 - 26.9 = 82.4 cfs**		
																					7.01	135.6	100	Q = 135.6 - 35.1 = 100.5 cfs		

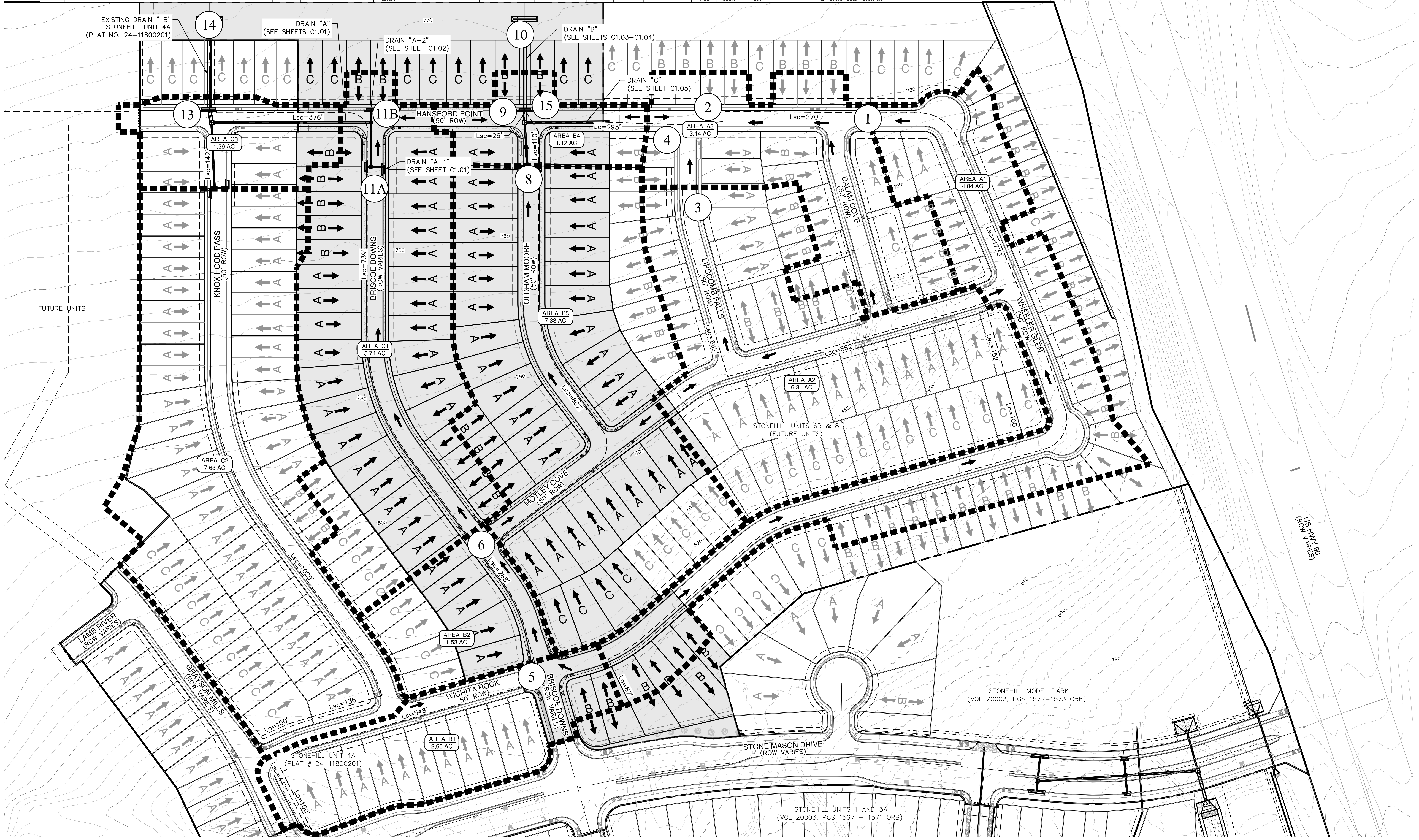

EXISTING DRAIN "B"
STONEHILL UNIT 4A
(PLAT NO. 24-11800201)
DRAIN "A"
(SEE SHEETS C1.01)
DRAIN "A-2"
(SEE SHEET C1.02)
DRAIN "B"
(SEE SHEETS C1.03-C1.04)
DRAIN "C"
(SEE SHEET C1.05)
DRAIN "A-1"
(SEE SHEET C1.01)
HANSFORD POINT
(50' ROW)
KNOX HOOD PASS
(50' ROW)
BRISCOE DOWNS
(ROW VARIES)
OLDHAM MOORE
(50' ROW)
LIPSCOMB FALLS
(50' ROW)
DALLAM COVE
(50' ROW)
WHEELER GLEN
(50' ROW)
MOTLEY COVE
(50' ROW)
WICHITA ROCK
(50' ROW)
LAMB RIVER
(ROW VARIES)
GRAYSON MILLS
(ROW VARIES)
STONE MASON DRIVE
(ROW VARIES)
US HWY 90
(ROW VARIES)
AREA A1
4.84 AC
AREA A2
6.31 AC
AREA A3
3.14 AC
AREA B1
2.60 AC
AREA B2
1.53 AC
AREA B3
7.33 AC
AREA B4
1.12 AC
AREA C1
5.74 AC
AREA C2
7.63 AC
AREA C3
1.39 AC
1
2
3
4
5
6
8
9
10
11A
11B
13
14
15
FUTURE UNITS
STONEHILL 6B & 8
(FUTURE UNITS)
STONEHILL MODEL PARK
(VOL 20003, PGS 1572-1573 ORB)
STONEHILL UNIT 4A
(PLAT # 24-11800201)
STONEHILL UNITS 1 AND 3A
(VOL 20003, PGS 1567 - 1571 ORB)
Lsc=376'
Lsc=295'
Lsc=270'
Lsc=862'
Lsc=548'
Lsc=1029'
770
780
790
800
810
820

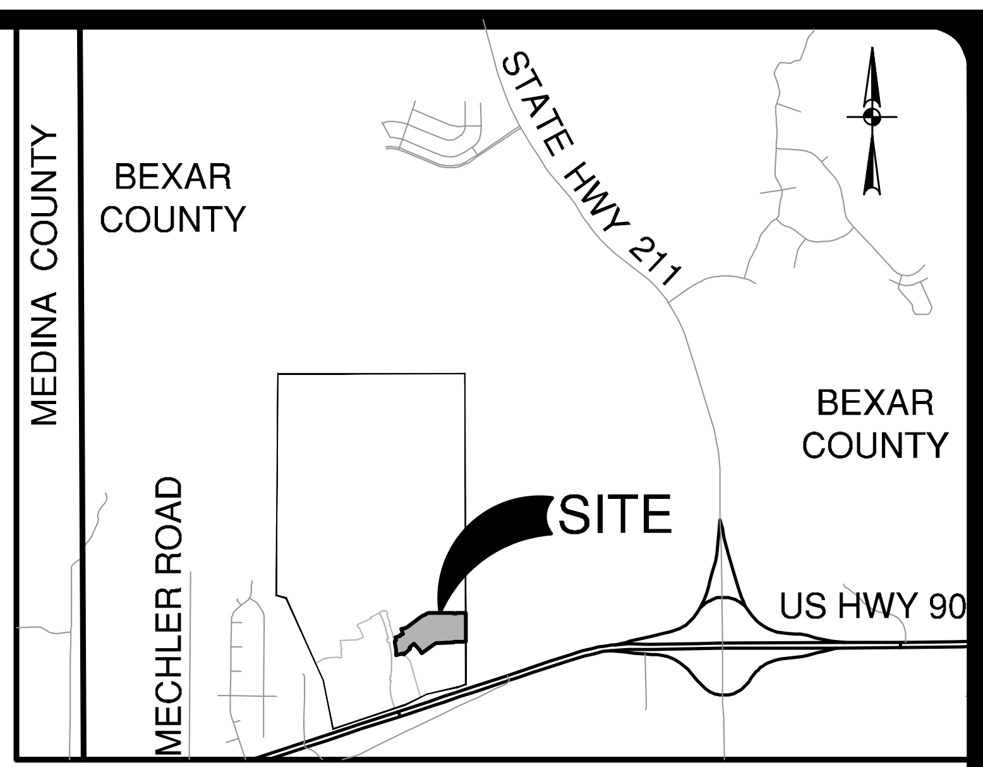

MEDINA COUNTY
BEXAR COUNTY
STATE HWY 211
BEXAR COUNTY
SITE
MECHLER ROAD
US HWY 90

LOCATION MAP

NOT-TO-SCALE

0' 100' 200' 300'

SCALE: 1"= 100'

MASTER DRAINAGE LEGEND

PROJECT LIMITS	▨
EXISTING CONTOUR	— — 690 — —
100 YR FLOODPLAIN	‒ ‒ ‒
RUNOFF FLOW PATH	- - - -
DRAINAGE AREA BOUNDARY	■ ■ ■
FHA LOT GRADING TYPE	A,B,C
PROPOSED DIRECTION OF FLOW	→
DRAINAGE CALCULATION POINT	(11)
DRAINAGE AREA	A

NO.	REVISION	DATE

CALEB M. CHANCE
98401
LICENSED PROFESSIONAL ENGINEER
5/29/25

PAPE-DAWSON ENGINEERS
2000 NW LOOP 410 I SAN ANTONIO, TX 78213 I 210.375.9000
TEXAS ENGINEERING FIRM #470 I TEXAS SURVEYING FIRM #10028800

STONEHILL UNITS 2B & 6A
SAN ANTONIO, TEXAS

MASTER DRAINAGE PLAN
SHEET TITLE 2

PLAT NO. 24-11800312
JOB NO. 12456-13
DATE JULY 2024
DESIGNER RA
CHECKED BL DRAWN RA
SHEET C1.00

Date: May 30, 2025, 8:56am User ID: ralvarez
File: P:\124\56\13\Design\Civil\SDOA-1245613.dwg

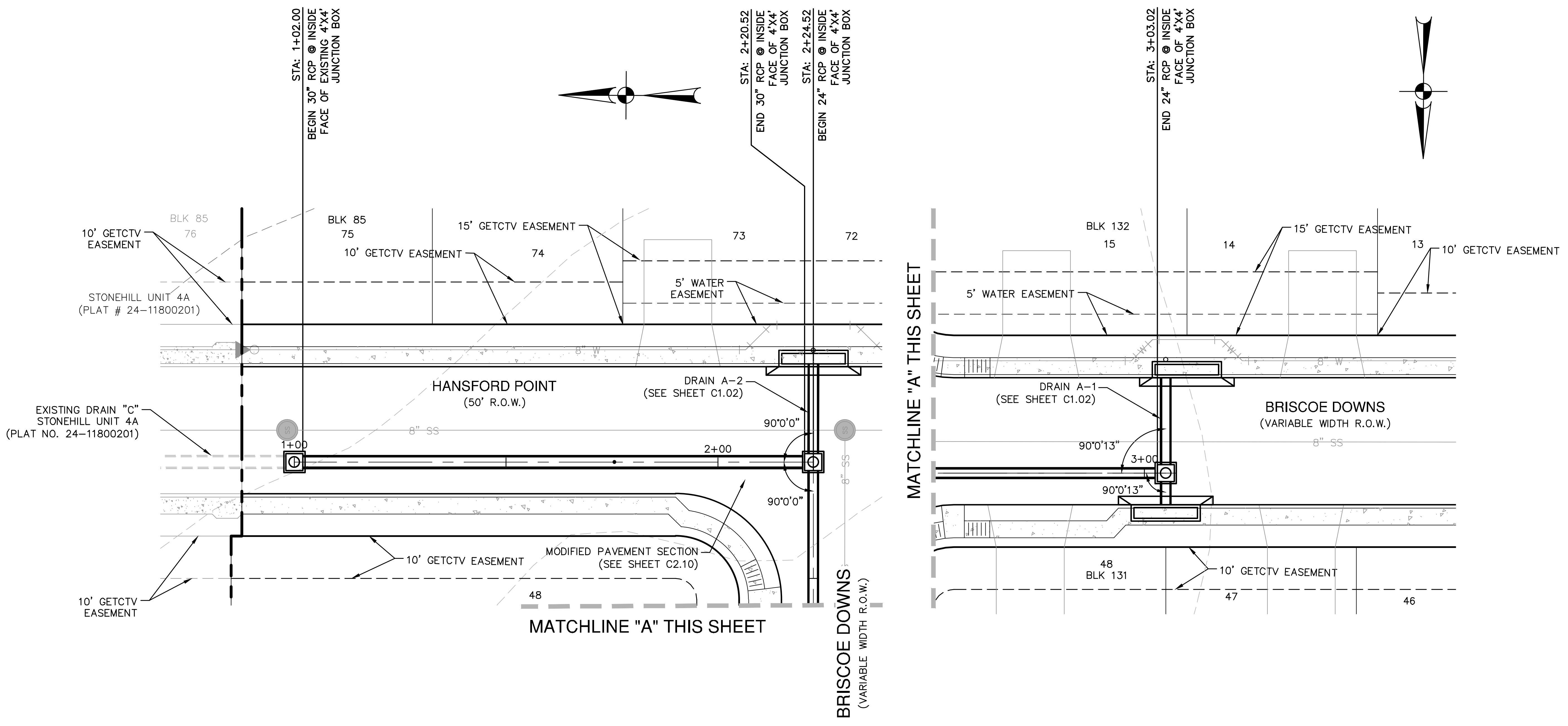
STA: 1+02.00
BEGIN 30" RCP @ INSIDE FACE OF EXISTING 4'X4' JUNCTION BOX
STA: 2+20.52
END 30" RCP @ INSIDE FACE OF 4'X4' JUNCTION BOX
STA: 2+24.52
BEGIN 24" RCP @ INSIDE FACE OF 4'X4' JUNCTION BOX
STA: 3+03.02
END 24" RCP @ INSIDE FACE OF 4'X4' JUNCTION BOX
BLK 85
76
75
74
73
72
10' GETCTV EASEMENT
15' GETCTV EASEMENT
10' GETCTV EASEMENT
5' WATER EASEMENT
STONEHILL UNIT 4A
(PLAT # 24-11800201)
8" W
HANSFORD POINT
(50' R.O.W.)
DRAIN A-2
(SEE SHEET C1.02)
EXISTING DRAIN "C"
STONEHILL UNIT 4A
(PLAT NO. 24-11800201)
8" SS
1+00
2+00
90°0'0"
90°0'0"
MODIFIED PAVEMENT SECTION
(SEE SHEET C2.10)
10' GETCTV EASEMENT
10' GETCTV EASEMENT
48
MATCHLINE "A" THIS SHEET
BRISCOE DOWNS
(VARIABLE WIDTH R.O.W.)
MATCHLINE "A" THIS SHEET
BLK 132
15
14
13
15' GETCTV EASEMENT
10' GETCTV EASEMENT
5' WATER EASEMENT
DRAIN A-1
(SEE SHEET C1.02)
BRISCOE DOWNS
(VARIABLE WIDTH R.O.W.)
8" SS
90°0'13"
3+00
90°0'13"
48
BLK 131
10' GETCTV EASEMENT
47
46

SCALE: 1"= 20'

0' 20' 40' 60'

DRAINAGE LEGEND

PROJECT LIMITS	——— — — ———
100 YR FLOODPLAIN	— — — — — —
EXISTING CONTOUR	— — — 690 — — —
PROPOSED CONTOUR	——— 690 ———
PROPOSED WATER	——— W ———
PROPOSED SEWER	——— SS ——— ●
PROPOSED STORM DRAIN	═══□═══▭
EXISTING STORM DRAIN	＝＝＝□＝＝＝▭
FLOW ARROW	➡

KEY LEGEND

Ⓐ	CONCRETE COLLAR (SEE DETAIL SHEET C1.12)
Ⓑ	CONTRACTOR TO GROUT BOTTOM OF BOX TO ALLOW FOR POSITIVE DRAINAGE

HYDRAULIC CALCULATIONS STORM DRAIN STA. 1+02.00 TO 2+20.52		
Q25	=	48.40 cfs
S	=	0.40%
Sf	=	1.39%
Vf	=	9.86 fps
n	=	.013
D	=	30"

HYDRAULIC CALCULATIONS STORM DRAIN STA. 2+24.52 TO 3+03.02		
Q25	=	14.02 cfs
S	=	0.50%
Sf	=	.38%
Vf	=	4.63 fps
n	=	.013
D	=	24"

DRAIN "A"
STA. 1+02.00 TO END

VERTICAL SCALE: 1" = 5'
HORIZONTAL SCALE: 1" = 20'

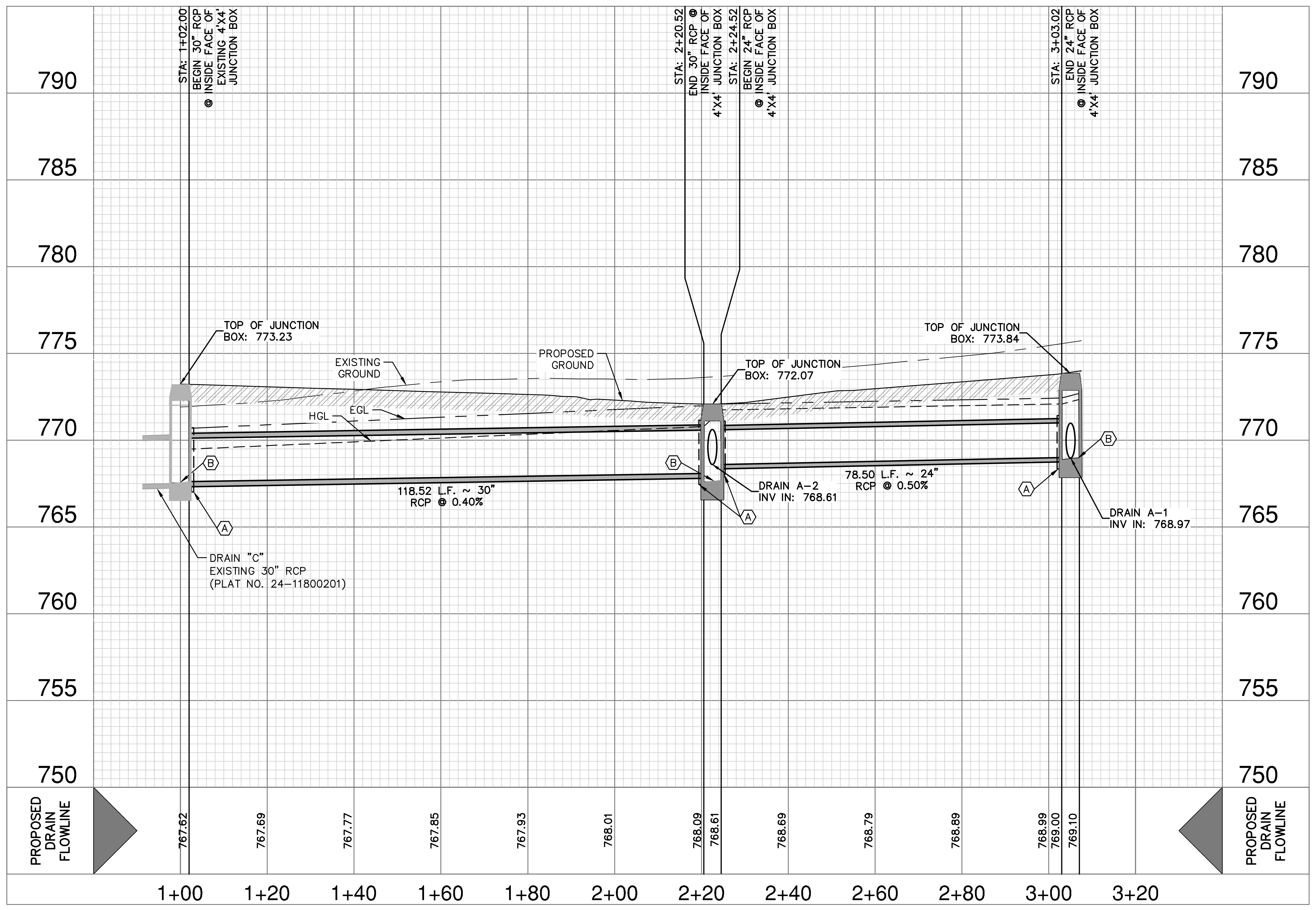
790
785
780
775
770
765
760
755
750
STA: 1+02.00
BEGIN 30" RCP @ INSIDE FACE OF EXISTING 4'X4' JUNCTION BOX
STA: 2+20.52
END 30" RCP @ INSIDE FACE OF 4'X4' JUNCTION BOX
STA: 2+24.52
BEGIN 24" RCP @ INSIDE FACE OF 4'X4' JUNCTION BOX
STA: 3+03.02
END 24" RCP @ INSIDE FACE OF 4'X4' JUNCTION BOX
TOP OF JUNCTION BOX: 773.23
EXISTING GROUND
PROPOSED GROUND
TOP OF JUNCTION BOX: 772.07
TOP OF JUNCTION BOX: 773.84
HGL
EGL
B
A
118.52 L.F. ~ 30" RCP @ 0.40%
DRAIN A-2
INV IN: 768.61
78.50 L.F. ~ 24" RCP @ 0.50%
DRAIN A-1
INV IN: 768.97
DRAIN "C"
EXISTING 30" RCP
(PLAT NO. 24-11800201)
PROPOSED DRAIN FLOWLINE
767.62
767.69
767.77
767.85
767.93
768.01
768.09
768.61
768.69
768.79
768.89
768.99
769.00
769.10
1+00
1+20
1+40
1+60
1+80
2+00
2+20
2+40
2+60
2+80
3+00
3+20

DRAINAGE & GRADING NOTES:

1. A BEXAR COUNTY ROW PERMIT MUST BE OBTAINED BEFORE WORKING IN BEXAR COUNTY ROW. CONTRACTOR SHALL COORDINATE A TRAFFIC CONTROL PLAN FOR ALL WORK WITHIN THE ROW. ADDITIONAL WARNING SIGNS MAY BE RECOMMENDED BY THE ENGINEER ONCE THE ROADWAYS ARE CONSTRUCTED.
2. THE CONTRACTOR WILL BE RESPONSIBLE FOR DETERMINING EXACT LOCATION OF ALL UTILITIES AND DRAINAGE STRUCTURES WHETHER SHOWN ON THE PLANS OR NOT. THE CONTRACTOR SHALL UNCOVER EXISTING UTILITIES PRIOR TO CONSTRUCTION TO VERIFY SIZE, GRADE, AND LOCATION. THE CONTRACTOR SHALL NOTIFY THE ENGINEER IMMEDIATELY OF ANY DEVIATIONS FROM PLANS PRIOR TO BEGINNING CONSTRUCTION. ANY DAMAGE TO EXISTING UTILITIES, WHETHER SHOWN ON THE PLANS OR NOT, SHALL BE THE CONTRACTOR'S RESPONSIBILITY TO REPAIR, AT HIS EXPENSE.
3. ALL CONCRETE FOR TXDOT DRAINAGE STRUCTURES SHALL MEET TXDOT SPECIFICATIONS. ALL OTHER CONCRETE SHALL BE CLASS "A" 3000 PSI CYLINDER STRENGTH IN 28 DAYS.
4. REFERENCE DRAINAGE DETAILS FOR PIPE TRENCH DETAILS, BOX CULVERT, HEADWALL, AND WINGWALL CONSTRUCTION DETAILS, AND BOX CULVERT BEDDING AND EXCAVATION LIMITS.
5. CONTRACTOR SHALL GROUT ALL CURB INLETS AND JUNCTION BOXES TO PROVIDE FOR POSITIVE DRAINAGE.
6. EARTHEN CHANNELS WILL BE VEGETATED BY SEEDING OR SODDING. 85% OF THE CHANNEL SURFACE MUST HAVE ESTABLISHED VEGETATION BEFORE THE CITY OF SAN ANTONIO WILL ACCEPT.
7. CONTRACTOR SHALL MATCH TOP OF CHANNEL TO NATURAL GROUND AND MAINTAIN A MINIMUM CHANNEL DEPTH OF "D" AS SHOWN IN THE PROFILE.

BEXAR COUNTY FLOOD PLAIN GENERAL CONSTRUCTION NOTES:

1. CONTRACTOR IS TO MAINTAIN UNRESTRICTED DRAINAGE OF THE PROJECT SITE AND ADJACENT AREAS DURING CONSTRUCTION.
2. NO CONSTRUCTION MATERIAL AND/OR WASTE MATERIAL SHALL BE PLACED IN EXISTING LOWS THAT WILL BLOCK OR ALTER FLOW LIMITS OF THE EXISTING NATURAL DRAINAGE OR PLACED WITHIN THE LIMITS OF THE EXISTING FLOOD PLAIN.

TRENCH EXCAVATION SAFETY PROTECTION:

CONTRACTOR AND/ OR CONTRACTOR'S INDEPENDENTLY RETAINED EMPLOYEE OR STRUCTURAL DESIGN/ GEOTECHNICAL/ SAFETY/EQUIPMENT CONSULTANT, IF ANY, SHALL REVIEW THESE PLANS AND ANY AVAILABLE GEOTECHNICAL INFORMATION AND THE ANTICIPATED INSTALLATION SITES WITHIN THE PROJECT WORK AREA IN ORDER TO IMPLEMENT CONTRACTOR'S TRENCH EXCAVATION SAFETY PROTECTION SYSTEMS, PROGRAMS AND /OR PROCEDURES FOR THE PROJECT DESCRIBED IN THE CONTRACT DOCUMENTS. THE CONTRACTOR'S IMPLEMENTATION OF THESE SYSTEMS, PROGRAMS AND/OR PROCEDURES SHALL PROVIDE FOR ADEQUATE TRENCH EXCAVATION SAFETY PROTECTION THAT COMPLY WITH AS A MINIMUM, OSHA STANDARDS FOR TRENCH EXCAVATIONS. SPECIFICALLY, CONTRACTOR AND/OR CONTRACTOR'S INDEPENDENTLY RETAINED EMPLOYEE OR SAFETY CONSULTANT SHALL IMPLEMENT A TRENCH SAFETY PROGRAM IN ACCORDANCE WITH OSHA STANDARDS GOVERNING THE PRESENCE AND ACTIVITIES OF INDIVIDUALS WORKING IN AND AROUND TRENCH EXCAVATION.

CAUTION!!

CONTRACTOR SHALL BE REQUIRED TO LOCATE ALL PUBLIC OR PRIVATE UTILITIES INCLUDING BUT NOT LIMITING TO: WATER, SEWER, TELEPHONE AND FIBER OPTIC LINES, SITE LIGHTING ELECTRIC, SECONDARY ELECTRIC, PRIMARY ELECTRICAL DUCTBANKS, LANDSCAPE IRRIGATION FACILITIES, AND GAS LINES. ANY UTILITY CONFLICTS THAT ARISE SHOULD BE COMMUNICATED TO THE ENGINEER IMMEDIATELY AND PRIOR TO CONSTRUCTION. THE CONTRACTOR SHALL CONTACT 1-800-DIG-TESS A MINIMUM OF 48 HOURS PRIOR TO THE START OF CONSTRUCTION. ANY DAMAGE TO EXISTING UTILITIES SHALL BE THE SOLE RESPONSIBILITY OF THE CONTRACTOR AND THE REPAIR SHALL BE AT CONTRACTOR'S SOLE EXPENSE WHETHER THE UTILITY IS SHOWN ON THESE PLANS OR NOT.

NO.	REVISION	DATE

CALEB M. CHANCE
98401
1/23/25

PAPE-DAWSON ENGINEERS
2000 NW LOOP 410 I SAN ANTONIO, TX 78213 I 210.375.9000
TEXAS ENGINEERING FIRM #470 I TEXAS SURVEYING FIRM #10028800

STONEHILL UNITS 2B & 6A
SAN ANTONIO, TEXAS

DRAIN A PLAN & PROFILE
(STA. 1+02.00 TO END)

PLAT NO. 24-11800312
JOB NO. 12456-13
DATE JULY 2024
DESIGNER RA
CHECKED BL DRAWN XX
SHEET C1.01

Date: Jan 23, 2025, 8:19am User ID: ralvarez
File: P:\124\56\13\Design\Civil\SDA-1245613.dwg

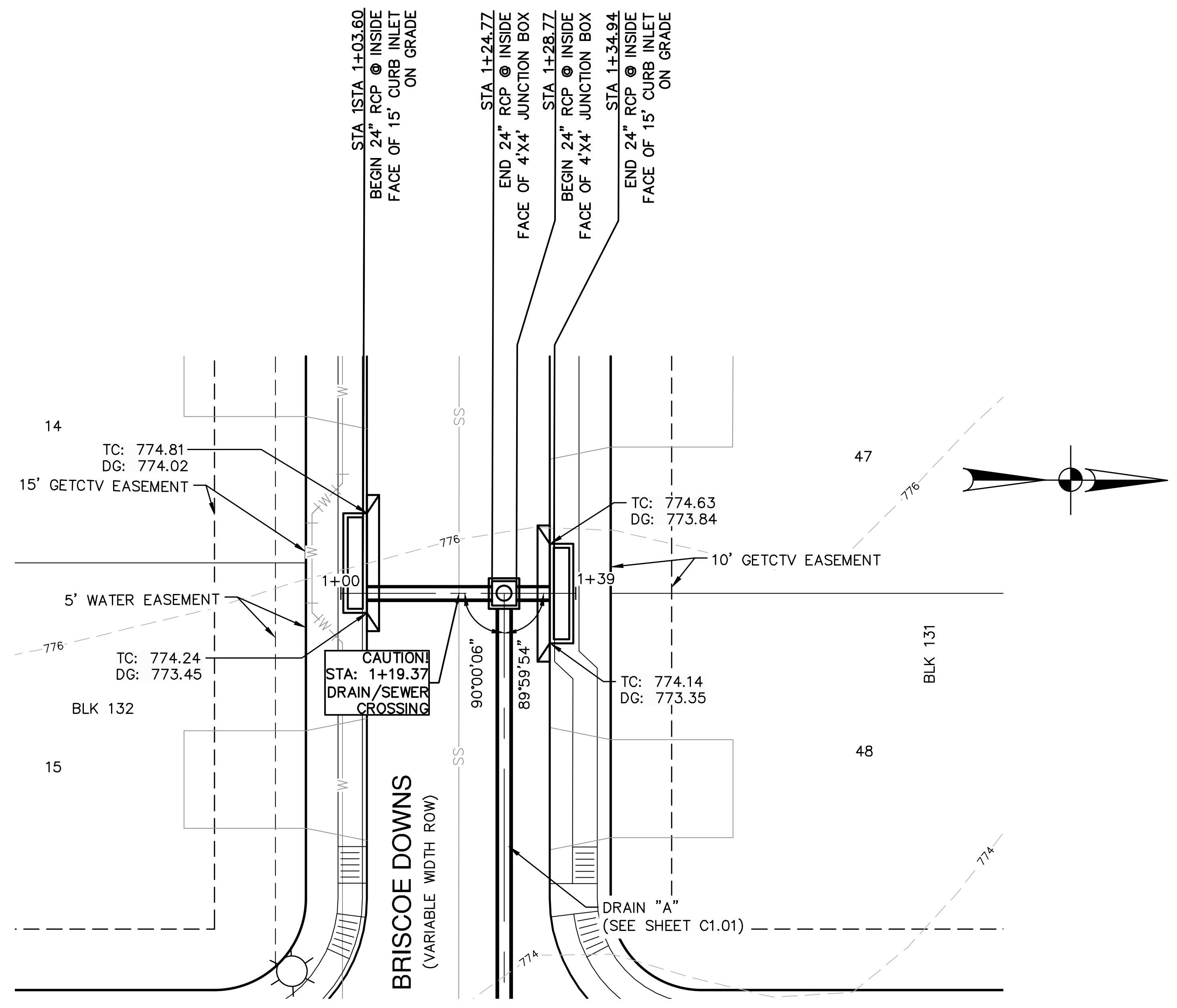
STA 1STA 1+03.60
BEGIN 24" RCP @ INSIDE
FACE OF 15' CURB INLET
ON GRADE
STA 1+24.77
END 24" RCP @ INSIDE
FACE OF 4'X4' JUNCTION BOX
STA 1+28.77
BEGIN 24" RCP @ INSIDE
FACE OF 4'X4' JUNCTION BOX
STA 1+34.94
END 24" RCP @ INSIDE
FACE OF 15' CURB INLET
ON GRADE
14
TC: 774.81
DG: 774.02
15' GETCTV EASEMENT
5' WATER EASEMENT
TC: 774.24
DG: 773.45
BLK 132
15
1+00
CAUTION!
STA: 1+19.37
DRAIN/SEWER
CROSSING
90°00'06"
89°59'54"
1+39
TC: 774.63
DG: 773.84
10' GETCTV EASEMENT
TC: 774.14
DG: 773.35
47
48
BLK 131
776
774
BRISCOE DOWNS
(VARIABLE WIDTH ROW)
DRAIN "A"
(SEE SHEET C1.01)

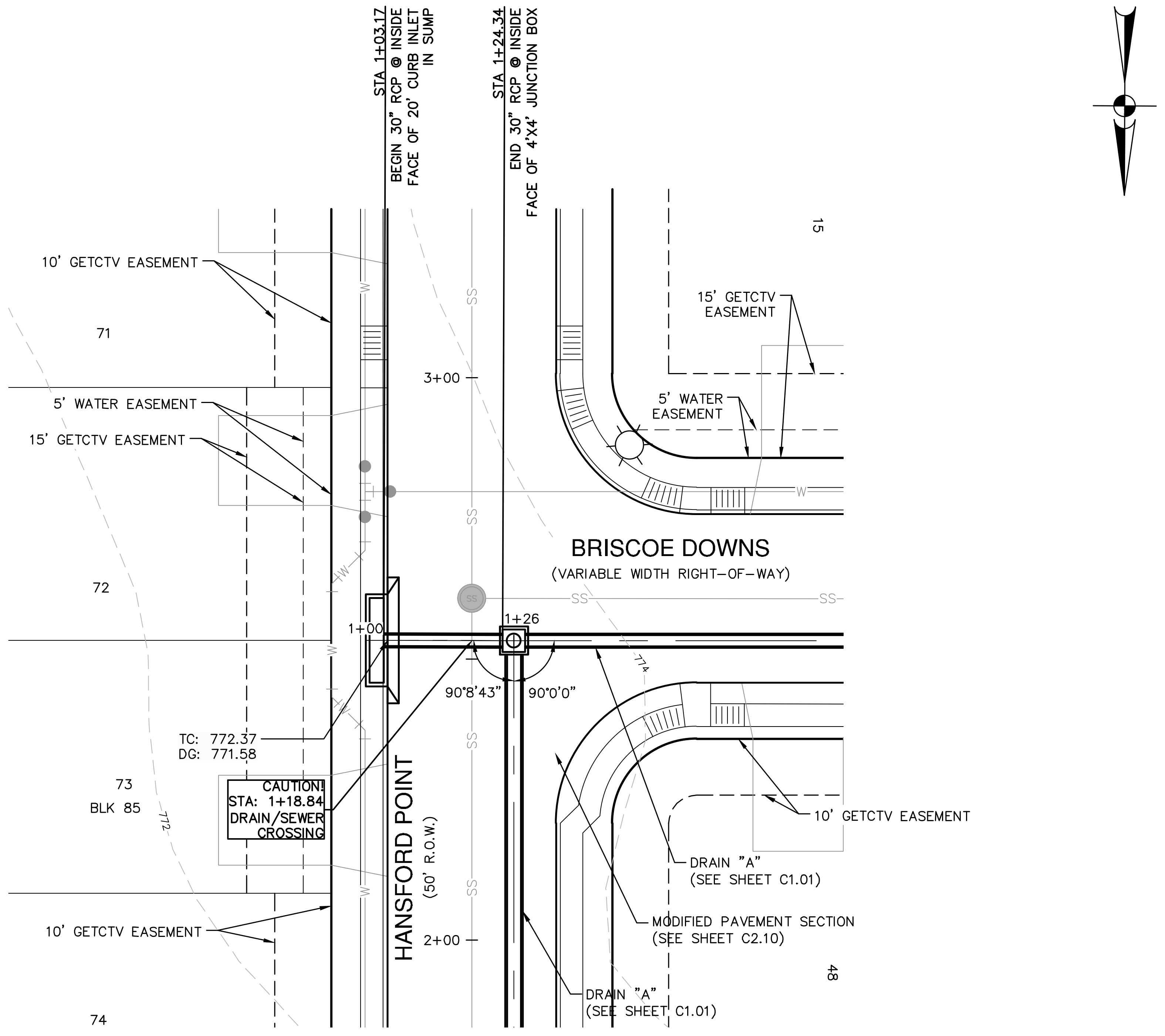
STA 1+03.17
BEGIN 30" RCP @ INSIDE
FACE OF 20' CURB INLET
IN SUMP
STA 1+24.34
END 30" RCP @ INSIDE
FACE OF 4'X4' JUNCTION BOX
10' GETCTV EASEMENT
71
5' WATER EASEMENT
15' GETCTV EASEMENT
72
3+00
2+00
1+00
1+26
90°8'43"
90°0'0"
TC: 772.37
DG: 771.58
CAUTION!
STA: 1+18.84
DRAIN/SEWER
CROSSING
73
BLK 85
74
772
774
HANSFORD POINT
(50' R.O.W.)
BRISCOE DOWNS
(VARIABLE WIDTH RIGHT-OF-WAY)
15' GETCTV
EASEMENT
5' WATER
EASEMENT
15
48
10' GETCTV EASEMENT
DRAIN "A"
(SEE SHEET C1.01)
MODIFIED PAVEMENT SECTION
(SEE SHEET C2.10)

SCALE: 1"= 20'

0' 20' 40' 60'

DRAINAGE LEGEND

PROJECT LIMITS
100 YR FLOODPLAIN
EXISTING CONTOUR
PROPOSED CONTOUR
PROPOSED WATER
PROPOSED SEWER
PROPOSED STORM DRAIN
EXISTING STORM DRAIN
FLOW ARROW

KEY LEGEND

(A) CONCRETE COLLAR (SEE DETAIL SHEET C1.12)

(B) CONTRACTOR TO GROUT BOTTOM OF BOX TO ALLOW FOR POSITIVE DRAINAGE

HYDRAULIC CALCULATIONS STORM DRAIN

STA. 1+03.60 TO 1+24.77

Q25 = 9.19 cfs
S = 1.18%
Sf = .17%
Vf = 2.93 fps
n = .013
D = 24"

HYDRAULIC CALCULATIONS STORM DRAIN

STA. 1+28.77 TO 1+34.94

Q25 = 9.19 cfs
S = 4.00%
Sf = .17%
Vf = 2.93 fps
n = .013
D = 24"

DRAIN "A-1"
STA. 1+03.60 TO END

VERTICAL SCALE: 1" = 5'
HORIZONTAL SCALE: 1" = 20'

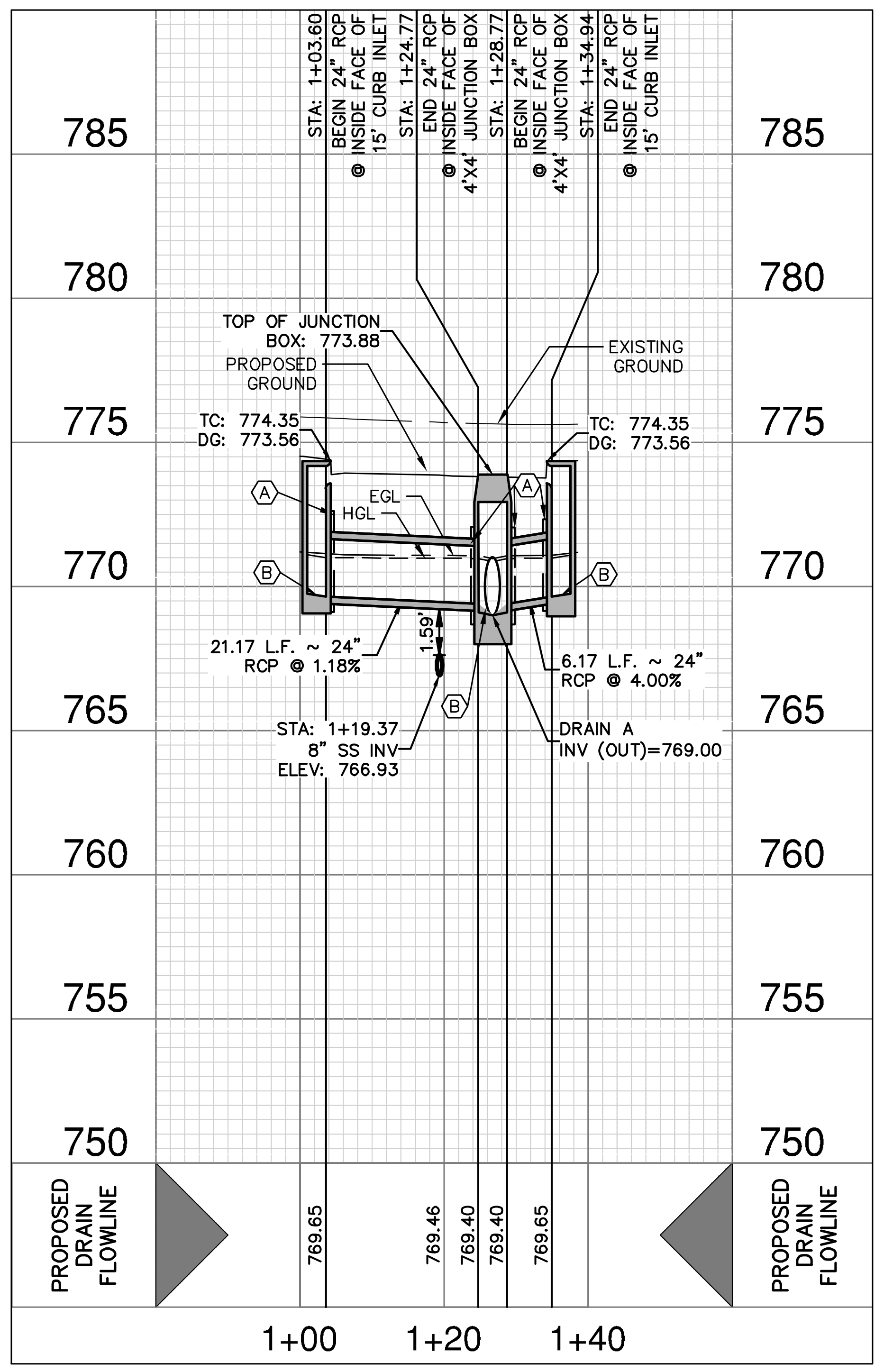
785
780
775
770
765
760
755
750
STA: 1+03.60
BEGIN 24" RCP
@ INSIDE FACE OF
15' CURB INLET
STA: 1+24.77
END 24" RCP
@ INSIDE FACE OF
4'X4' JUNCTION BOX
STA: 1+28.77
BEGIN 24" RCP
@ INSIDE FACE OF
4'X4' JUNCTION BOX
STA: 1+34.94
END 24" RCP
@ INSIDE FACE OF
15' CURB INLET
TOP OF JUNCTION
BOX: 773.88
PROPOSED
GROUND
EXISTING
GROUND
TC: 774.35
DG: 773.56
TC: 774.35
DG: 773.56
A
B
EGL
HGL
21.17 L.F. ~ 24"
RCP @ 1.18%
1.59'
6.17 L.F. ~ 24"
RCP @ 4.00%
STA: 1+19.37
8" SS INV
ELEV: 766.93
DRAIN A
INV (OUT)=769.00
PROPOSED
DRAIN
FLOWLINE
769.65
769.46
769.40
769.40
769.65
1+00
1+20
1+40

DRAIN "A-2"
STA. 1+03.17 TO END

VERTICAL SCALE: 1" = 5'
HORIZONTAL SCALE: 1" = 20'

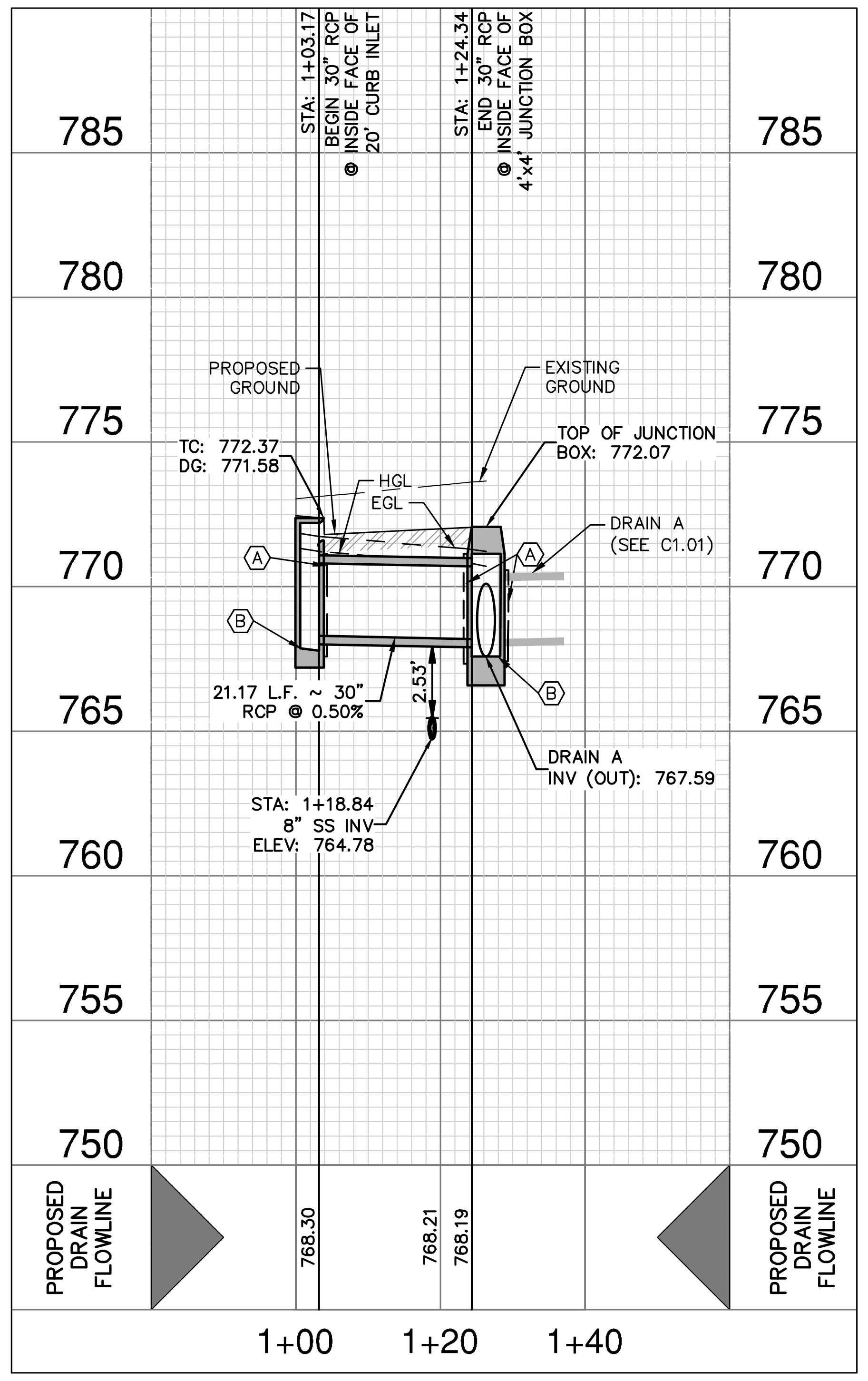
785
780
775
770
765
760
755
750
STA: 1+03.17
BEGIN 30" RCP
@ INSIDE FACE OF
20' CURB INLET
STA: 1+24.34
END 30" RCP
@ INSIDE FACE OF
4'x4' JUNCTION BOX
PROPOSED
GROUND
EXISTING
GROUND
TC: 772.37
DG: 771.58
TOP OF JUNCTION
BOX: 772.07
HGL
EGL
DRAIN A
(SEE C1.01)
A
B
21.17 L.F. ~ 30"
RCP @ 0.50%
2.53'
STA: 1+18.84
8" SS INV
ELEV: 764.78
DRAIN A
INV (OUT): 767.59
PROPOSED
DRAIN
FLOWLINE
768.30
768.21
768.19
1+00
1+20
1+40

HYDRAULIC CALCULATIONS STORM DRAIN

STA. 1+03.17 TO 1+24.34

Q25 = 24.22 cfs
S = 0.50%
Sf = .35%
V = 4.93 fps
n = .013
D = 30"

HYDRAULIC CALCULATIONS–DRAIN "A-2"

TOTAL $Q_{25} = 24.22$ CFS

$Q_{25} = CA\sqrt{2gh}$ (ORIFICE FLOW EQN.)

$A = L(0.52),\ h = 0.54,\ g = 32.2,\ c = 0.70$

$$L = \frac{24.22\ \text{CFS}}{(0.70)\ (0.52)\sqrt{2\ (32.2)\ (0.54)}}$$

L = 11.28 FT USE 1 ~ 15 FT CURB INLET

CHECK WITH WEIR FORMULA

$$h = \left(\frac{Q}{(CL)}\right)^{2/3} = \left(\frac{24.22}{(3.087)\ (15)}\right)^{2/3} = 0.65\ \text{FT.}$$

$h = 0.65 < 0.79$ OK

DRAINAGE & GRADING NOTES:

1. A BEXAR COUNTY ROW PERMIT MUST BE OBTAINED BEFORE WORKING IN BEXAR COUNTY ROW. CONTRACTOR SHALL COORDINATE A TRAFFIC CONTROL PLAN FOR ALL WORK WITHIN THE ROW. ADDITIONAL WARNING SIGNS MAY BE RECOMMENDED BY THE ENGINEER ONCE THE ROADWAYS ARE CONSTRUCTED.
2. THE CONTRACTOR WILL BE RESPONSIBLE FOR DETERMINING EXACT LOCATION OF ALL UTILITIES AND DRAINAGE STRUCTURES WHETHER SHOWN ON THE PLANS OR NOT. THE CONTRACTOR SHALL UNCOVER EXISTING UTILITIES PRIOR TO CONSTRUCTION TO VERIFY SIZE, GRADE, AND LOCATION. THE CONTRACTOR SHALL NOTIFY THE ENGINEER IMMEDIATELY OF ANY DEVIATIONS FROM PLANS PRIOR TO BEGINNING CONSTRUCTION. ANY DAMAGE TO EXISTING UTILITIES, WHETHER SHOWN ON THE PLANS OR NOT, SHALL BE THE CONTRACTOR'S RESPONSIBILITY TO REPAIR, AT HIS EXPENSE.
3. ALL CONCRETE FOR TXDOT DRAINAGE STRUCTURES SHALL MEET TXDOT SPECIFICATIONS. ALL OTHER CONCRETE SHALL BE CLASS "A" 3000 PSI CYLINDER STRENGTH IN 28 DAYS.
4. REFERENCE DRAINAGE DETAILS FOR PIPE TRENCH DETAILS, BOX CULVERT, HEADWALL, AND WINGWALL CONSTRUCTION DETAILS, AND BOX CULVERT BEDDING AND EXCAVATION LIMITS.
5. CONTRACTOR SHALL GROUT ALL CURB INLETS AND JUNCTION BOXES TO PROVIDE FOR POSITIVE DRAINAGE.
6. EARTHEN CHANNELS WILL BE VEGETATED BY SEEDING OR SODDING. 85% OF THE CHANNEL SURFACE MUST HAVE ESTABLISHED VEGETATION BEFORE THE CITY OF SAN ANTONIO WILL ACCEPT.
7. CONTRACTOR SHALL MATCH TOP OF CHANNEL TO NATURAL GROUND AND MAINTAIN A MINIMUM CHANNEL DEPTH OF "D" AS SHOWN IN THE PROFILE.

BEXAR COUNTY FLOOD PLAIN GENERAL CONSTRUCTION NOTES:

1. CONTRACTOR IS TO MAINTAIN UNRESTRICTED DRAINAGE OF THE PROJECT SITE AND ADJACENT AREAS DURING CONSTRUCTION.
2. NO CONSTRUCTION MATERIAL AND/OR WASTE MATERIAL SHALL BE PLACED IN EXISTING LOWS THAT WILL BLOCK OR ALTER FLOW LIMITS OF THE EXISTING NATURAL DRAINAGE OR PLACED WITHIN THE LIMITS OF THE EXISTING FLOOD PLAIN.

TRENCH EXCAVATION SAFETY PROTECTION:

CONTRACTOR AND/ OR CONTRACTOR'S INDEPENDENTLY RETAINED EMPLOYEE OR STRUCTURAL DESIGN/ GEOTECHNICAL/ SAFETY/EQUIPMENT CONSULTANT, IF ANY, SHALL REVIEW THESE PLANS AND ANY AVAILABLE GEOTECHNICAL INFORMATION AND THE ANTICIPATED INSTALLATION SITES WITHIN THE PROJECT WORK AREA IN ORDER TO IMPLEMENT CONTRACTOR'S TRENCH EXCAVATION SAFETY PROTECTION SYSTEMS, PROGRAMS AND /OR PROCEDURES FOR THE PROJECT DESCRIBED IN THE CONTRACT DOCUMENTS. THE CONTRACTOR'S IMPLEMENTATION OF THESE SYSTEMS, PROGRAMS AND/OR PROCEDURES SHALL PROVIDE FOR ADEQUATE TRENCH EXCAVATION SAFETY PROTECTION THAT COMPLY WITH AS A MINIMUM, OSHA STANDARDS FOR TRENCH EXCAVATIONS. SPECIFICALLY, CONTRACTOR AND/OR CONTRACTOR'S INDEPENDENTLY RETAINED EMPLOYEE OR SAFETY CONSULTANT SHALL IMPLEMENT A TRENCH SAFETY PROGRAM IN ACCORDANCE WITH OSHA STANDARDS GOVERNING THE PRESENCE AND ACTIVITIES OF INDIVIDUALS WORKING IN AND AROUND TRENCH EXCAVATION.

CAUTION!!

CONTRACTOR SHALL BE REQUIRED TO LOCATE ALL PUBLIC OR PRIVATE UTILITIES INCLUDING BUT NOT LIMITING TO: WATER, SEWER, TELEPHONE AND FIBER OPTIC LINES, SITE LIGHTING ELECTRIC, SECONDARY ELECTRIC, PRIMARY ELECTRICAL DUCTBANKS, LANDSCAPE IRRIGATION FACILITIES, AND GAS LINES. ANY UTILITY CONFLICTS THAT ARISE SHOULD BE COMMUNICATED TO THE ENGINEER IMMEDIATELY AND PRIOR TO CONSTRUCTION. THE CONTRACTOR SHALL CONTACT 1-800-DIG-TESS A MINIMUM OF 48 HOURS PRIOR TO THE START OF CONSTRUCTION. ANY DAMAGE TO EXISTING UTILITIES SHALL BE THE SOLE RESPONSIBILITY OF THE CONTRACTOR AND THE REPAIR SHALL BE AT CONTRACTOR'S SOLE EXPENSE WHETHER THE UTILITY IS SHOWN ON THESE PLANS OR NOT.

NO.	REVISION	DATE

CALEB M. CHANCE
98401
5/29/25

PAPE-DAWSON ENGINEERS
2000 NW LOOP 410 I SAN ANTONIO, TX 78213 I 210.375.9000
TEXAS ENGINEERING FIRM #470 I TEXAS SURVEYING FIRM #10028800

STONEHILL UNITS 2B & 6A

SAN ANTONIO, TEXAS
DRAIN A1 & A2 PLAN & PROFILE
A-1 (STA. 1+.03.60 TO END)
DRAIN A-2 (STA. 1+03.17 TO END)

PLAT NO. 24-11800312
JOB NO. 12456-13
DATE JULY 2024
DESIGNER RA
CHECKED BL DRAWN EG
SHEET C1.02

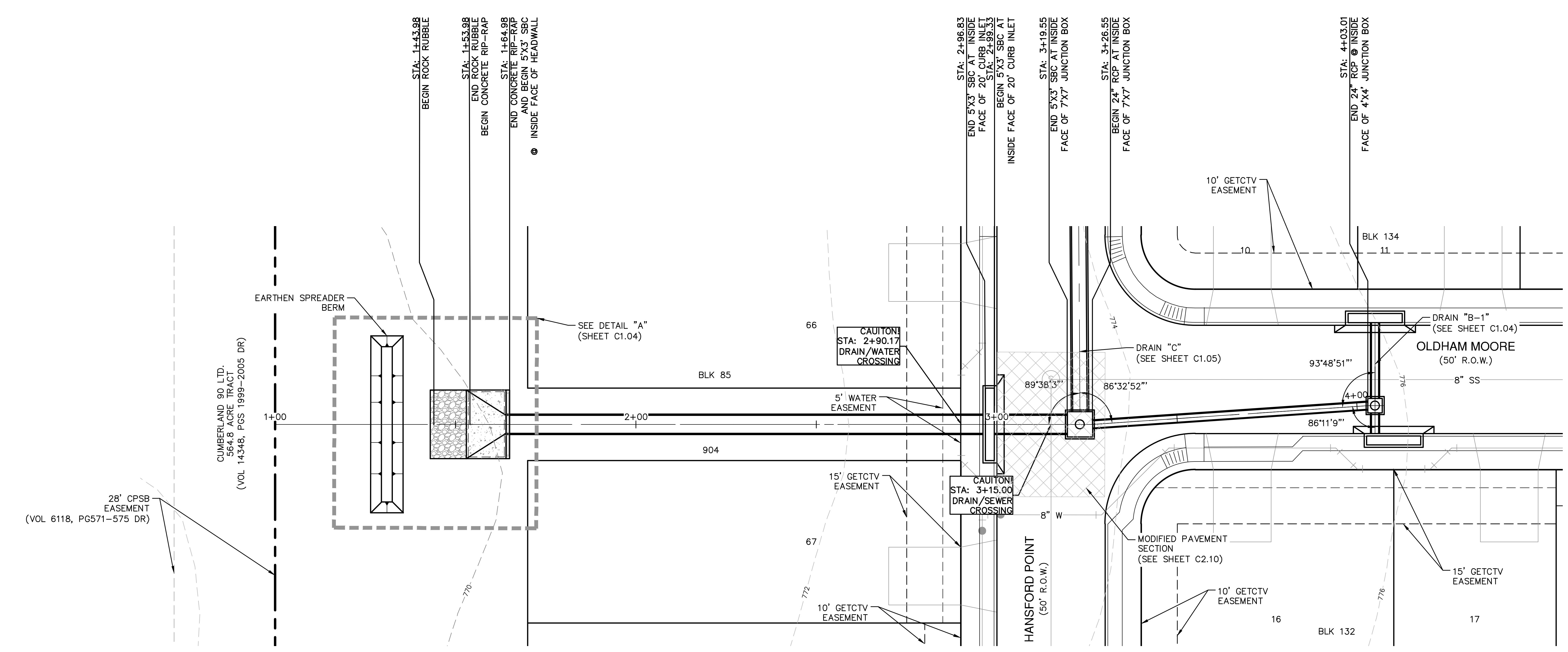

SCALE: 1"= 20'
0'
20'
40'
60'
STA: 1+43.98 BEGIN ROCK RUBBLE
STA: 1+53.98 END ROCK RUBBLE BEGIN CONCRETE RIP-RAP
STA: 1+64.98 END CONCRETE RIP-RAP AND BEGIN 5'X3' SBC @ INSIDE FACE OF HEADWALL
STA: 2+96.83 END 5'X3' SBC AT INSIDE FACE OF 20' CURB INLET
STA: 2+99.33 BEGIN 5'X3' SBC AT INSIDE FACE OF 20' CURB INLET
STA: 3+19.55 END 5'X3' SBC AT INSIDE FACE OF 7'X7' JUNCTION BOX
STA: 3+26.55 BEGIN 24" RCP AT INSIDE FACE OF 7'X7' JUNCTION BOX
STA: 4+03.01 END 24" RCP @ INSIDE FACE OF 4'X4' JUNCTION BOX
EARTHEN SPREADER BERM
SEE DETAIL "A" (SHEET C1.04)
CAUTION! STA: 2+90.17 DRAIN/WATER CROSSING
CAUTION! STA: 3+15.00 DRAIN/SEWER CROSSING
10' GETCTV EASEMENT
15' GETCTV EASEMENT
5' WATER EASEMENT
28' CPSB EASEMENT (VOL 6118, PG571-575 DR)
CUMBERLAND 90 LTD. 564.8 ACRE TRACT (VOL 14348, PGS 1999-2005 DR)
BLK 85
BLK 134
BLK 132
66
67
904
16
17
10
11
1+00
2+00
3+00
4+00
DRAIN "B-1" (SEE SHEET C1.04)
DRAIN "C" (SEE SHEET C1.05)
OLDHAM MOORE (50' R.O.W.)
HANSFORD POINT (50' R.O.W.)
8" SS
8" W
89°38'3"
86°32'52"
93°48'51"
86°11'9"
MODIFIED PAVEMENT SECTION (SEE SHEET C2.10)
770
772
774
776

DRAINAGE LEGEND

PROJECT LIMITS	— - - —
100 YR FLOODPLAIN	— — —
EXISTING CONTOUR	- - - 690 - - -
PROPOSED CONTOUR	—(690)—
PROPOSED WATER	— W —
PROPOSED SEWER	— SS —●
PROPOSED STORM DRAIN	═══
EXISTING STORM DRAIN	= = =
FLOW ARROW	➡

KEY LEGEND

- Ⓐ CONCRETE COLLAR (SEE DETAIL SHEET C1.12)
- Ⓑ CONTRACTOR TO GROUT BOTTOM OF BOX TO ALLOW FOR POSITIVE DRAINAGE

HYDRAULIC CALCULATIONS–DRAIN "B"

TOTAL $Q_{25} = 39.31$ CFS

$Q_{25} = CA\sqrt{2gh}$ (ORIFICE FLOW EQN.)

$A = L(0.52),\ h = 0.54,\ g = 32.2,\ c = 0.70$

$$L = \frac{39.31\ \text{CFS}}{(0.70)\ (0.52)\sqrt{2\ (32.2)\ (0.54)}}$$

L = 18.31 FT   USE 1 ~ 20 FT CURB INLET

CHECK WITH WEIR FORMULA

$$h = \left(\frac{Q}{(CL)}\right)^{2/3} = \left(\frac{39.31}{(3.087)\ (20)}\right)^{2/3} = 0.64T.$$

$h = 0.64 < 0.79$ OK

HYDRAULIC CALCULATIONS STORM DRAIN

STA. 1+65.98 TO 2+96.83

Q25	=	109.3 cfs
Sf	=	.44%
V	=	7.29 fps
n	=	0.013
D	=	3'
S	=	.40%

HYDRAULIC CALCULATIONS STORM DRAIN

STA. 2+99.33 TO 3+19.55

Q25	=	82.4 cfs
Sf	=	.25%
V	=	5.49 fps
n	=	0.013
D	=	3'
S	=	.50%

HYDRAULIC CALCULATIONS STORM DRAIN

STA. 3+26.55 TO 4+03.01

Q25	=	13.68 cfs
Sf	=	.36%
V	=	4.35 fps
n	=	0.013
D	=	24"
S	=	.50%

DRAIN "B"
STA. 1+43.98 TO END

VERTICAL SCALE: 1" = 5'
HORIZONTAL SCALE: 1" = 20'

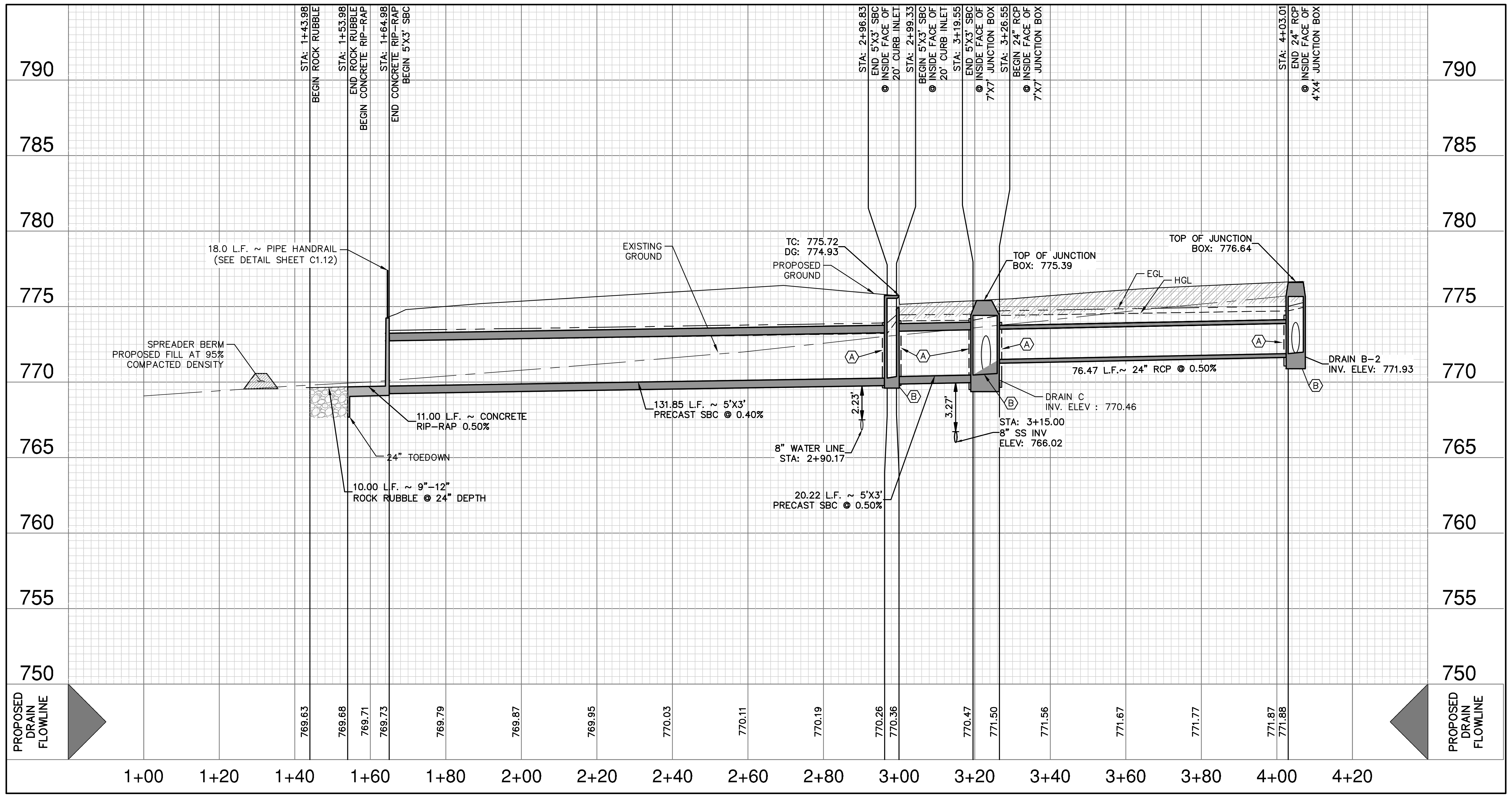

790
785
780
775
770
765
760
755
750
STA: 1+43.98 BEGIN ROCK RUBBLE
STA: 1+53.98 END ROCK RUBBLE BEGIN CONCRETE RIP-RAP
STA: 1+64.98 END CONCRETE RIP-RAP BEGIN 5'X3' SBC
STA: 2+96.83 END 5'X3' SBC @ INSIDE FACE OF 20' CURB INLET
STA: 2+99.33 BEGIN 5'X3' SBC @ INSIDE FACE OF 20' CURB INLET
STA: 3+19.55 END 5'X3' SBC @ INSIDE FACE OF 7'X7' JUNCTION BOX
STA: 3+26.55 BEGIN 24" RCP @ INSIDE FACE OF 7'X7' JUNCTION BOX
STA: 4+03.01 END 24" RCP @ INSIDE FACE OF 4'X4' JUNCTION BOX
18.0 L.F. ~ PIPE HANDRAIL (SEE DETAIL SHEET C1.12)
EXISTING GROUND
TC: 775.72
DG: 774.93
PROPOSED GROUND
TOP OF JUNCTION BOX: 775.39
TOP OF JUNCTION BOX: 776.64
EGL
HGL
SPREADER BERM PROPOSED FILL AT 95% COMPACTED DENSITY
A
B
76.47 L.F.~ 24" RCP @ 0.50%
DRAIN B-2 INV. ELEV: 771.93
DRAIN C INV. ELEV : 770.46
11.00 L.F. ~ CONCRETE RIP-RAP 0.50%
24" TOEDOWN
131.85 L.F. ~ 5'X3' PRECAST SBC @ 0.40%
2.23'
3.27'
8" WATER LINE STA: 2+90.17
STA: 3+15.00 8" SS INV ELEV: 766.02
10.00 L.F. ~ 9"-12" ROCK RUBBLE @ 24" DEPTH
20.22 L.F. ~ 5'X3' PRECAST SBC @ 0.50%
PROPOSED DRAIN FLOWLINE
769.63
769.68
769.71
769.73
769.79
769.87
769.95
770.03
770.11
770.19
770.26
770.36
770.47
771.50
771.56
771.67
771.77
771.87
771.88
1+00
1+20
1+40
1+60
1+80
2+00
2+20
2+40
2+60
2+80
3+00
3+20
3+40
3+60
3+80
4+00
4+20

DRAINAGE & GRADING NOTES:

1. A BEXAR COUNTY ROW PERMIT MUST BE OBTAINED BEFORE WORKING IN BEXAR COUNTY ROW. CONTRACTOR SHALL COORDINATE A TRAFFIC CONTROL PLAN FOR ALL WORK WITHIN THE ROW. ADDITIONAL WARNING SIGNS MAY BE RECOMMENDED BY THE ENGINEER ONCE THE ROADWAYS ARE CONSTRUCTED.

2. THE CONTRACTOR WILL BE RESPONSIBLE FOR DETERMINING EXACT LOCATION OF ALL UTILITIES AND DRAINAGE STRUCTURES WHETHER SHOWN ON THE PLANS OR NOT. THE CONTRACTOR SHALL UNCOVER EXISTING UTILITIES PRIOR TO CONSTRUCTION TO VERIFY SIZE, GRADE, AND LOCATION. THE CONTRACTOR SHALL NOTIFY THE ENGINEER IMMEDIATELY OF ANY DEVIATIONS FROM PLANS PRIOR TO BEGINNING CONSTRUCTION. ANY DAMAGE TO EXISTING UTILITIES, WHETHER SHOWN ON THE PLANS OR NOT, SHALL BE THE CONTRACTOR'S RESPONSIBILITY TO REPAIR, AT HIS EXPENSE.

3. ALL CONCRETE FOR TXDOT DRAINAGE STRUCTURES SHALL MEET TXDOT SPECIFICATIONS. ALL OTHER CONCRETE SHALL BE CLASS "A" 3000 PSI CYLINDER STRENGTH IN 28 DAYS.

4. REFERENCE DRAINAGE DETAILS FOR PIPE TRENCH DETAILS, BOX CULVERT, HEADWALL, AND WINGWALL CONSTRUCTION DETAILS, AND BOX CULVERT BEDDING AND EXCAVATION LIMITS.

5. CONTRACTOR SHALL GROUT ALL CURB INLETS AND JUNCTION BOXES TO PROVIDE FOR POSITIVE DRAINAGE.

6. EARTHEN CHANNELS WILL BE VEGETATED BY SEEDING OR SODDING. 85% OF THE CHANNEL SURFACE MUST HAVE ESTABLISHED VEGETATION BEFORE THE CITY OF SAN ANTONIO WILL ACCEPT.

7. CONTRACTOR SHALL MATCH TOP OF CHANNEL TO NATURAL GROUND AND MAINTAIN A MINIMUM CHANNEL DEPTH OF "D" AS SHOWN IN THE PROFILE.

BEXAR COUNTY FLOOD PLAIN GENERAL CONSTRUCTION NOTES:

1. CONTRACTOR IS TO MAINTAIN UNRESTRICTED DRAINAGE OF THE PROJECT SITE AND ADJACENT AREAS DURING CONSTRUCTION.

2. NO CONSTRUCTION MATERIAL AND/OR WASTE MATERIAL SHALL BE PLACED IN EXISTING LOWS THAT WILL BLOCK OR ALTER FLOW LIMITS OF THE EXISTING NATURAL DRAINAGE OR PLACED WITHIN THE LIMITS OF THE EXISTING FLOOD PLAIN.

TRENCH EXCAVATION SAFETY PROTECTION:

CONTRACTOR AND/ OR CONTRACTOR'S INDEPENDENTLY RETAINED EMPLOYEE OR STRUCTURAL DESIGN/ GEOTECHNICAL/ SAFETY/EQUIPMENT CONSULTANT, IF ANY, SHALL REVIEW THESE PLANS AND ANY AVAILABLE GEOTECHNICAL INFORMATION AND THE ANTICIPATED INSTALLATION SITES WITHIN THE PROJECT WORK AREA IN ORDER TO IMPLEMENT CONTRACTOR'S TRENCH EXCAVATION SAFETY PROTECTION SYSTEMS, PROGRAMS AND /OR PROCEDURES FOR THE PROJECT DESCRIBED IN THE CONTRACT DOCUMENTS. THE CONTRACTOR'S IMPLEMENTATION OF THESE SYSTEMS, PROGRAMS AND/OR PROCEDURES SHALL PROVIDE FOR ADEQUATE TRENCH EXCAVATION SAFETY PROTECTION THAT COMPLY WITH AS A MINIMUM, OSHA STANDARDS FOR TRENCH EXCAVATIONS. SPECIFICALLY, CONTRACTOR AND/OR CONTRACTOR'S INDEPENDENTLY RETAINED EMPLOYEE OR SAFETY CONSULTANT SHALL IMPLEMENT A TRENCH SAFETY PROGRAM IN ACCORDANCE WITH OSHA STANDARDS GOVERNING THE PRESENCE AND ACTIVITIES OF INDIVIDUALS WORKING IN AND AROUND TRENCH EXCAVATION.

CAUTION!!

CONTRACTOR SHALL BE REQUIRED TO LOCATE ALL PUBLIC OR PRIVATE UTILITIES INCLUDING BUT NOT LIMITING TO: WATER, SEWER, TELEPHONE AND FIBER OPTIC LINES, SITE LIGHTING ELECTRIC, SECONDARY ELECTRIC, PRIMARY ELECTRICAL DUCTBANKS, LANDSCAPE IRRIGATION FACILITIES, AND GAS LINES. ANY UTILITY CONFLICTS THAT ARISE SHOULD BE COMMUNICATED TO THE ENGINEER IMMEDIATELY AND PRIOR TO CONSTRUCTION. THE CONTRACTOR SHALL CONTACT 1-800-DIG-TESS A MINIMUM OF 48 HOURS PRIOR TO THE START OF CONSTRUCTION. ANY DAMAGE TO EXISTING UTILITIES SHALL BE THE SOLE RESPONSIBILITY OF THE CONTRACTOR AND THE REPAIR SHALL BE AT CONTRACTOR'S SOLE EXPENSE WHETHER THE UTILITY IS SHOWN ON THESE PLANS OR NOT.

NO.	REVISION	DATE

CALEB M. CHANCE
98401
Cal
5/29/25

PAPE-DAWSON ENGINEERS
2000 NW LOOP 410 I SAN ANTONIO, TX 78213 I 210.375.9000
TEXAS ENGINEERING FIRM #470 I TEXAS SURVEYING FIRM #10028800

STONEHILL UNITS 2B & 6A
SAN ANTONIO, TEXAS

DRAIN B PLAN & PROFILE
(STA. 1+43.98 TO END)

PLAT NO. 24-11800312
JOB NO. 12456–13
DATE JULY 2024
DESIGNER RA
CHECKED BL DRAWN XX
SHEET C1.03

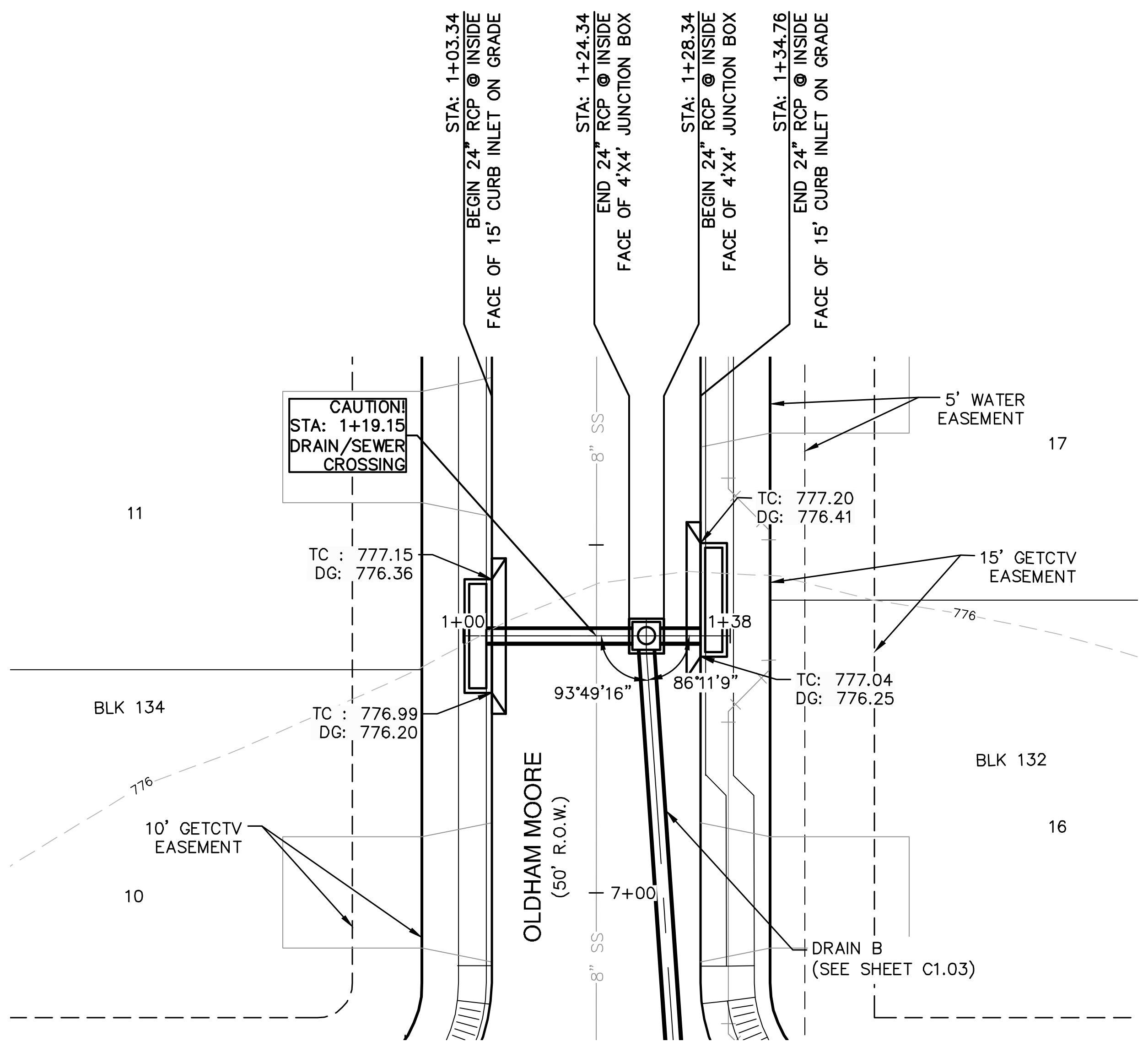
STA: 1+03.34
BEGIN 24" RCP @ INSIDE
FACE OF 15' CURB INLET ON GRADE
STA: 1+24.34
END 24" RCP @ INSIDE
FACE OF 4'X4' JUNCTION BOX
STA: 1+28.34
BEGIN 24" RCP @ INSIDE
FACE OF 4'X4' JUNCTION BOX
STA: 1+34.76
END 24" RCP @ INSIDE
FACE OF 15' CURB INLET ON GRADE
CAUTION!
STA: 1+19.15
DRAIN/SEWER
CROSSING
5' WATER
EASEMENT
17
11
TC : 777.15
DG: 776.36
TC: 777.20
DG: 776.41
15' GETCTV
EASEMENT
776
1+00
1+38
93°49'16"
86°11'9"
TC: 777.04
DG: 776.25
BLK 134
TC : 776.99
DG: 776.20
BLK 132
776
10' GETCTV
EASEMENT
16
10
OLDHAM MOORE
(50' R.O.W.)
7+00
8" SS
DRAIN B
(SEE SHEET C1.03)

SCALE: 1"= 20'

0' 20' 40' 60'

DRAINAGE LEGEND

PROJECT LIMITS	——— – – ———
100 YR FLOODPLAIN	▬ ▬ ▬ ▬ ▬
EXISTING CONTOUR	– – – 690 – – –
PROPOSED CONTOUR	——— 690 ———
PROPOSED WATER	——— W ———
PROPOSED SEWER	——— SS ——— ● ———
PROPOSED STORM DRAIN	═══□═══
EXISTING STORM DRAIN	= = =□= = =
FLOW ARROW	➡

KEY LEGEND

- (A) CONCRETE COLLAR (SEE DETAIL SHEET C1.12)
- (B) CONTRACTOR TO GROUT BOTTOM OF BOX TO ALLOW FOR POSITIVE DRAINAGE

HYDRAULIC CALCULATIONS STORM DRAIN

STA. 1+03.34 TO 1+24.34

Q25 = 6.84 cfs
Sf = .10%
V = 2.18 fps
n = 0.013
D = 24"
S = 0.52%

HYDRAULIC CALCULATIONS STORM DRAIN

STA. 1+28.34 TO 1+34.76

Q25 = 6.84 cfs
Sf = .10%
V = 2.18 fps
n = 0.013
D = 24"
S = 1.71%

DRAIN "B-1"
STA. 1+03.34 TO END

VERTICAL SCALE: 1" = 5'
HORIZONTAL SCALE: 1" = 20'

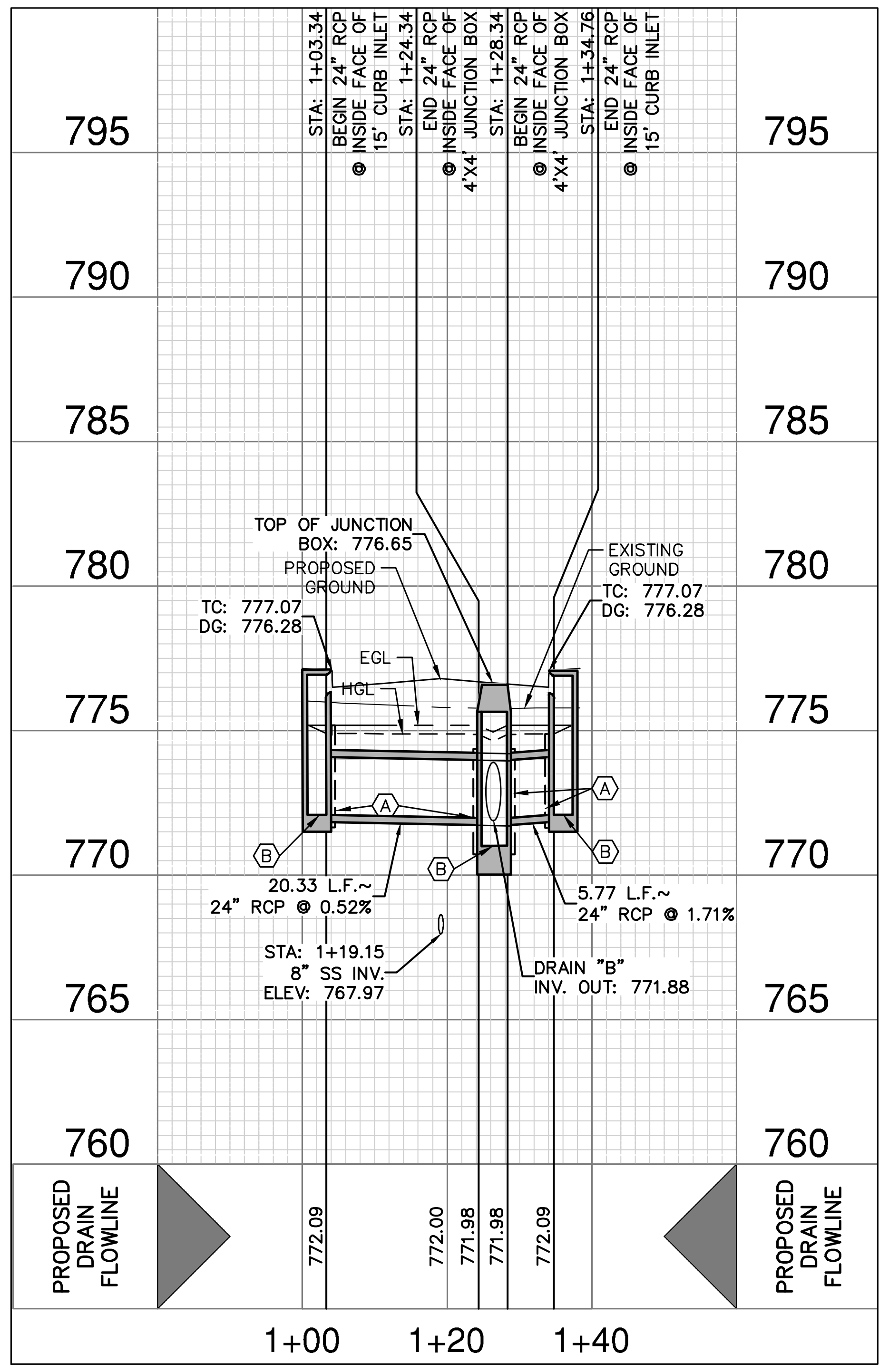
795
790
785
780
775
770
765
760
STA: 1+03.34
BEGIN 24" RCP
@ INSIDE FACE OF
15' CURB INLET
STA: 1+24.34
END 24" RCP
@ INSIDE FACE OF
4'X4' JUNCTION BOX
STA: 1+28.34
BEGIN 24" RCP
@ INSIDE FACE OF
4'X4' JUNCTION BOX
STA: 1+34.76
END 24" RCP
@ INSIDE FACE OF
15' CURB INLET
TOP OF JUNCTION
BOX: 776.65
PROPOSED
GROUND
EXISTING
GROUND
TC: 777.07
DG: 776.28
TC: 777.07
DG: 776.28
EGL
HGL
A
A
B
B
B
20.33 L.F.~
24" RCP @ 0.52%
5.77 L.F.~
24" RCP @ 1.71%
STA: 1+19.15
8" SS INV.
ELEV: 767.97
DRAIN "B"
INV. OUT: 771.88
PROPOSED
DRAIN
FLOWLINE
772.09
772.00
771.98
771.98
772.09
PROPOSED
DRAIN
FLOWLINE
1+00
1+20
1+40

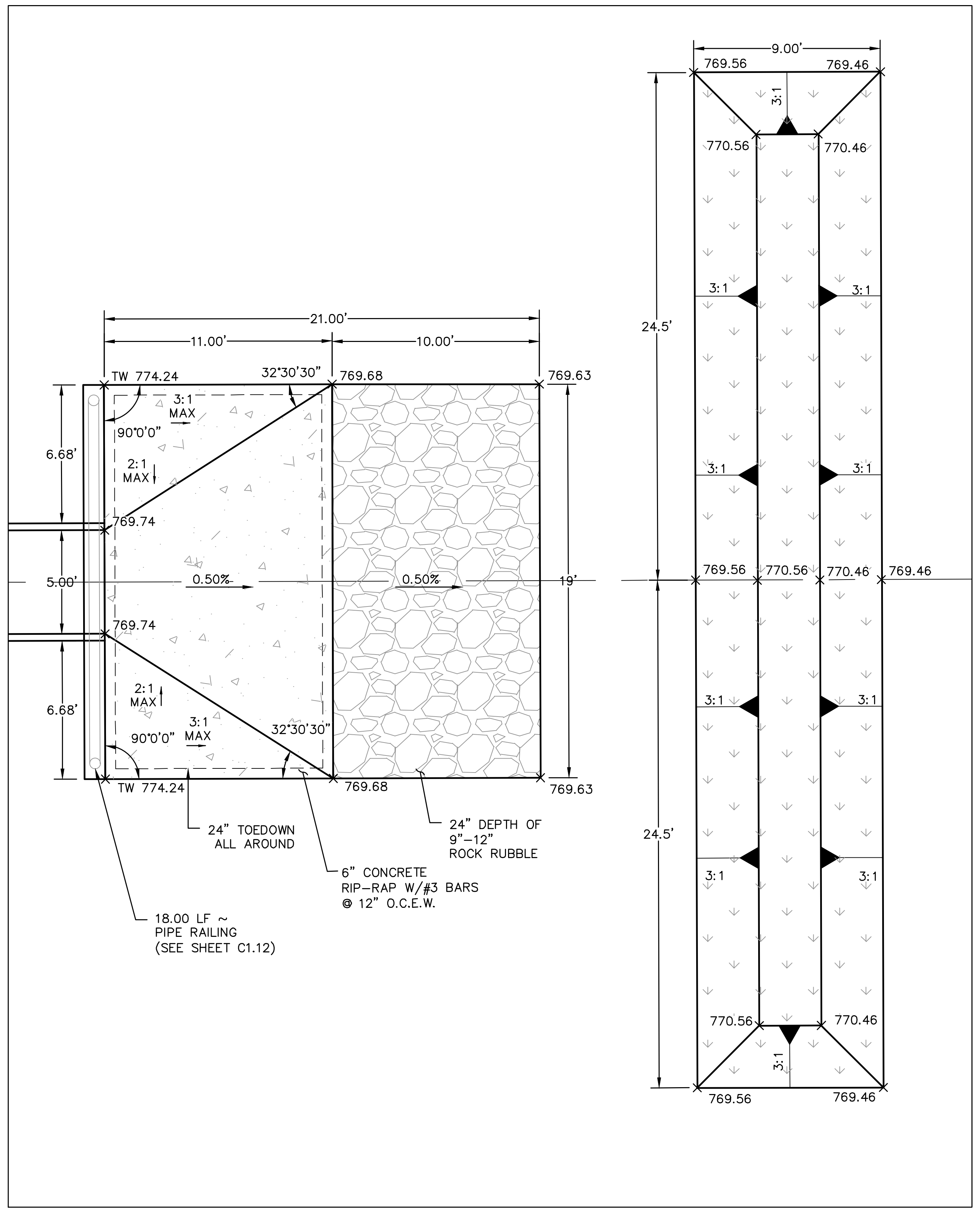
21.00'
11.00'
10.00'
TW 774.24
32°30'30"
769.68
769.63
3:1
MAX
90°0'0"
2:1
MAX
6.68'
769.74
5.00'
0.50%
0.50%
19'
769.74
2:1
MAX
6.68'
3:1
MAX
90°0'0"
32°30'30"
TW 774.24
769.68
769.63
24" TOEDOWN
ALL AROUND
6" CONCRETE
RIP-RAP W/#3 BARS
@ 12" O.C.E.W.
24" DEPTH OF
9"-12"
ROCK RUBBLE
18.00 LF ~
PIPE RAILING
(SEE SHEET C1.12)
9.00'
769.56
769.46
770.56
770.46
3:1
3:1
3:1
3:1
24.5'
769.56
770.56
770.46
769.46
3:1
3:1
24.5'
3:1
3:1
770.56
770.46
3:1
769.56
769.46

DETAIL "A"
SCALE: 1" = 5'

DRAINAGE & GRADING NOTES:

1. A BEXAR COUNTY ROW PERMIT MUST BE OBTAINED BEFORE WORKING IN BEXAR COUNTY ROW. CONTRACTOR SHALL COORDINATE A TRAFFIC CONTROL PLAN FOR ALL WORK WITHIN THE ROW. ADDITIONAL WARNING SIGNS MAY BE RECOMMENDED BY THE ENGINEER ONCE THE ROADWAYS ARE CONSTRUCTED.
2. THE CONTRACTOR WILL BE RESPONSIBLE FOR DETERMINING EXACT LOCATION OF ALL UTILITIES AND DRAINAGE STRUCTURES WHETHER SHOWN ON THE PLANS OR NOT. THE CONTRACTOR SHALL UNCOVER EXISTING UTILITIES PRIOR TO CONSTRUCTION TO VERIFY SIZE, GRADE, AND LOCATION. THE CONTRACTOR SHALL NOTIFY THE ENGINEER IMMEDIATELY OF ANY DEVIATIONS FROM PLANS PRIOR TO BEGINNING CONSTRUCTION. ANY DAMAGE TO EXISTING UTILITIES, WHETHER SHOWN ON THE PLANS OR NOT, SHALL BE THE CONTRACTOR'S RESPONSIBILITY TO REPAIR, AT HIS EXPENSE.
3. ALL CONCRETE FOR TXDOT DRAINAGE STRUCTURES SHALL MEET TXDOT SPECIFICATIONS. ALL OTHER CONCRETE SHALL BE CLASS "A" 3000 PSI CYLINDER STRENGTH IN 28 DAYS.
4. REFERENCE DRAINAGE DETAILS FOR PIPE TRENCH DETAILS, BOX CULVERT, HEADWALL, AND WINGWALL CONSTRUCTION DETAILS, AND BOX CULVERT BEDDING AND EXCAVATION LIMITS.
5. CONTRACTOR SHALL GROUT ALL CURB INLETS AND JUNCTION BOXES TO PROVIDE FOR POSITIVE DRAINAGE.
6. EARTHEN CHANNELS WILL BE VEGETATED BY SEEDING OR SODDING. 85% OF THE CHANNEL SURFACE MUST HAVE ESTABLISHED VEGETATION BEFORE THE CITY OF SAN ANTONIO WILL ACCEPT.
7. CONTRACTOR SHALL MATCH TOP OF CHANNEL TO NATURAL GROUND AND MAINTAIN A MINIMUM CHANNEL DEPTH OF "D" AS SHOWN IN THE PROFILE.

BEXAR COUNTY FLOOD PLAIN GENERAL CONSTRUCTION NOTES:

1. CONTRACTOR IS TO MAINTAIN UNRESTRICTED DRAINAGE OF THE PROJECT SITE AND ADJACENT AREAS DURING CONSTRUCTION.
2. NO CONSTRUCTION MATERIAL AND/OR WASTE MATERIAL SHALL BE PLACED IN EXISTING LOWS THAT WILL BLOCK OR ALTER FLOW LIMITS OF THE EXISTING NATURAL DRAINAGE OR PLACED WITHIN THE LIMITS OF THE EXISTING FLOOD PLAIN.

TRENCH EXCAVATION SAFETY PROTECTION:

CONTRACTOR AND/ OR CONTRACTOR'S INDEPENDENTLY RETAINED EMPLOYEE OR STRUCTURAL DESIGN/ GEOTECHNICAL/ SAFETY/EQUIPMENT CONSULTANT, IF ANY, SHALL REVIEW THESE PLANS AND ANY AVAILABLE GEOTECHNICAL INFORMATION AND THE ANTICIPATED INSTALLATION SITES WITHIN THE PROJECT WORK AREA IN ORDER TO IMPLEMENT CONTRACTOR'S TRENCH EXCAVATION SAFETY PROTECTION SYSTEMS, PROGRAMS AND /OR PROCEDURES FOR THE PROJECT DESCRIBED IN THE CONTRACT DOCUMENTS. THE CONTRACTOR'S IMPLEMENTATION OF THESE SYSTEMS, PROGRAMS AND/OR PROCEDURES SHALL PROVIDE FOR ADEQUATE TRENCH EXCAVATION SAFETY PROTECTION THAT COMPLY WITH AS A MINIMUM, OSHA STANDARDS FOR TRENCH EXCAVATIONS. SPECIFICALLY, CONTRACTOR AND/OR CONTRACTOR'S INDEPENDENTLY RETAINED EMPLOYEE OR SAFETY CONSULTANT SHALL IMPLEMENT A TRENCH SAFETY PROGRAM IN ACCORDANCE WITH OSHA STANDARDS GOVERNING THE PRESENCE AND ACTIVITIES OF INDIVIDUALS WORKING IN AND AROUND TRENCH EXCAVATION.

CAUTION!!

CONTRACTOR SHALL BE REQUIRED TO LOCATE ALL PUBLIC OR PRIVATE UTILITIES INCLUDING BUT NOT LIMITING TO: WATER, SEWER, TELEPHONE AND FIBER OPTIC LINES, SITE LIGHTING ELECTRIC, SECONDARY ELECTRIC, PRIMARY ELECTRICAL DUCTBANKS, LANDSCAPE IRRIGATION FACILITIES, AND GAS LINES. ANY UTILITY CONFLICTS THAT ARISE SHOULD BE COMMUNICATED TO THE ENGINEER IMMEDIATELY AND PRIOR TO CONSTRUCTION. THE CONTRACTOR SHALL CONTACT 1-800-DIG-TESS A MINIMUM OF 48 HOURS PRIOR TO THE START OF CONSTRUCTION. ANY DAMAGE TO EXISTING UTILITIES SHALL BE THE SOLE RESPONSIBILITY OF THE CONTRACTOR AND THE REPAIR SHALL BE AT CONTRACTOR'S SOLE EXPENSE WHETHER THE UTILITY IS SHOWN ON THESE PLANS OR NOT.

NO.	REVISION	DATE

CALEB M. CHANCE
98401
Calf
5/29/25

PAPE-DAWSON ENGINEERS
2000 NW LOOP 410 I SAN ANTONIO, TX 78213 I 210.375.9000
TEXAS ENGINEERING FIRM #470 I TEXAS SURVEYING FIRM #10028800

STONEHILL UNITS 2B & 6A
SAN ANTONIO, TEXAS

DRAIN B1 PLAN & PROFILE

PLAT NO. 24-11800312
JOB NO. 12456-13
DATE JULY 2024
DESIGNER RA
CHECKED BL DRAWN EG
SHEET C1.04

Date: May 30, 2025, 8:58am User ID: ralvarez
File: P:\124\56\13\Design\Civil\SDB1-1245613.dwg

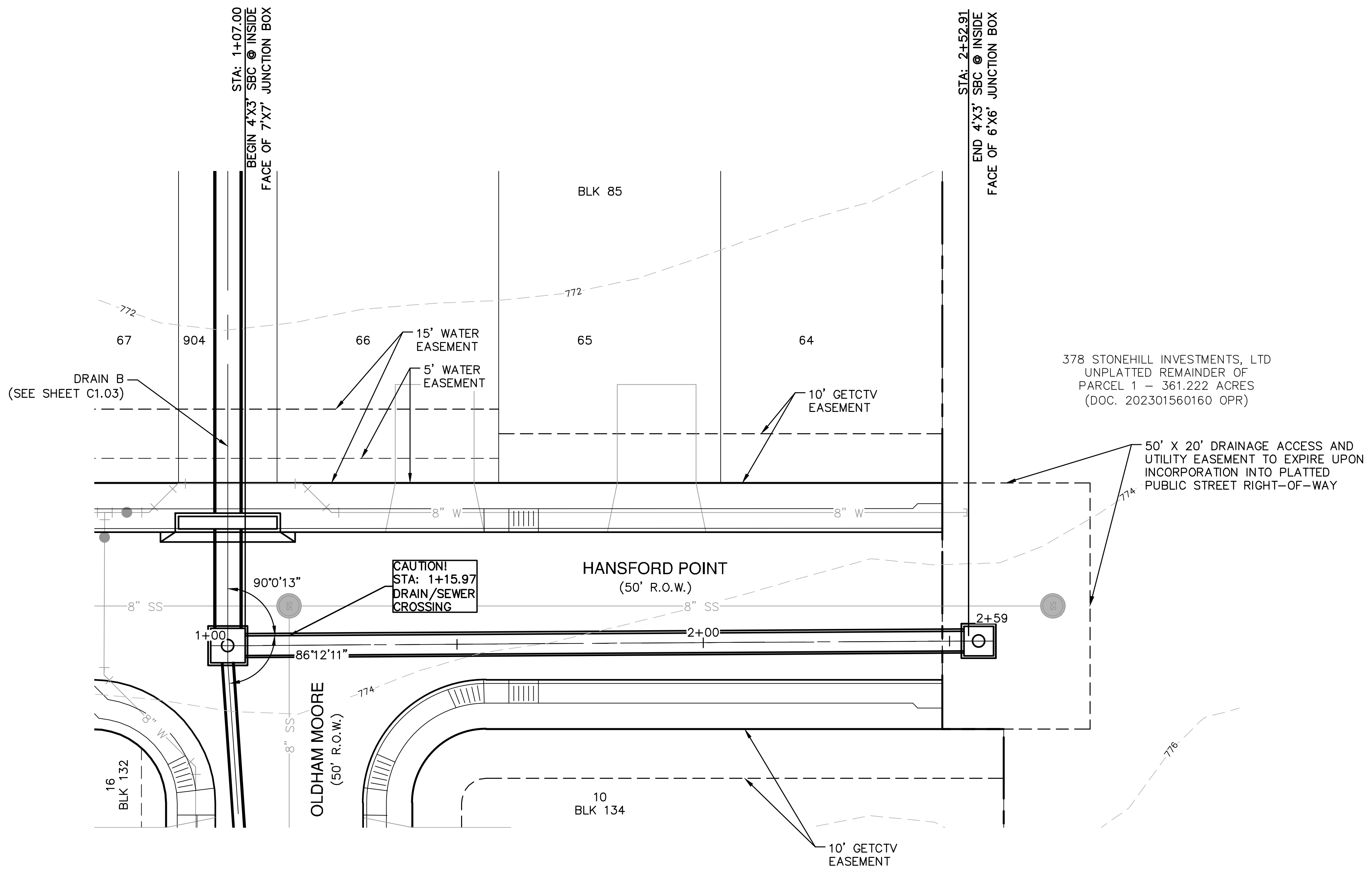
STA: 1+07.00
BEGIN 4'X3' SBC @ INSIDE
FACE OF 7'X7' JUNCTION BOX
STA: 2+52.91
END 4'X3' SBC @ INSIDE
FACE OF 6'X6' JUNCTION BOX
BLK 85
772
67
904
66
65
64
15' WATER
EASEMENT
5' WATER
EASEMENT
DRAIN B
(SEE SHEET C1.03)
10' GETCTV
EASEMENT
378 STONEHILL INVESTMENTS, LTD
UNPLATTED REMAINDER OF
PARCEL 1 – 361.222 ACRES
(DOC. 202301560160 OPR)
50' X 20' DRAINAGE ACCESS AND
UTILITY EASEMENT TO EXPIRE UPON
INCORPORATION INTO PLATTED
PUBLIC STREET RIGHT–OF–WAY
8" W
774
CAUTION!
STA: 1+15.97
DRAIN/SEWER
CROSSING
HANSFORD POINT
(50' R.O.W.)
90°0'13"
8" SS
1+00
2+00
2+59
86°12'11"
OLDHAM MOORE
(50' R.O.W.)
16
BLK 132
10
BLK 134
776
10' GETCTV
EASEMENT

SCALE: 1"= 20'

0' 20' 40' 60'

DRAINAGE LEGEND

PROJECT LIMITS	—— – – ——
100 YR FLOODPLAIN	▬ ▬ ▬ ▬ ▬
EXISTING CONTOUR	– – – 690 – – –
PROPOSED CONTOUR	——(690)——
PROPOSED WATER	—— W ——
PROPOSED SEWER	—— SS ——●
PROPOSED STORM DRAIN	═══□═══⊏□
EXISTING STORM DRAIN	═ ═ □ ═ ═ ⊏□
FLOW ARROW	➡

KEY LEGEND

Ⓐ	CONCRETE COLLAR (SEE DETAIL SHEET C1.12)
Ⓑ	CONTRACTOR TO GROUT BOTTOM OF BOX TO ALLOW FOR POSITIVE DRAINAGE

HYDRAULIC CALCULATIONS STORM DRAIN

STA. 1+07.00 TO 2+52.91

Q25 = 60.8 cfs
S = 0.50%
Sf = .24%
Vf = 5.07 fps
n = .013
D = 3'

DRAIN "C"
STA. 1+07.00 TO END

VERTICAL SCALE: 1" = 5'
HORIZONTAL SCALE: 1" = 20'

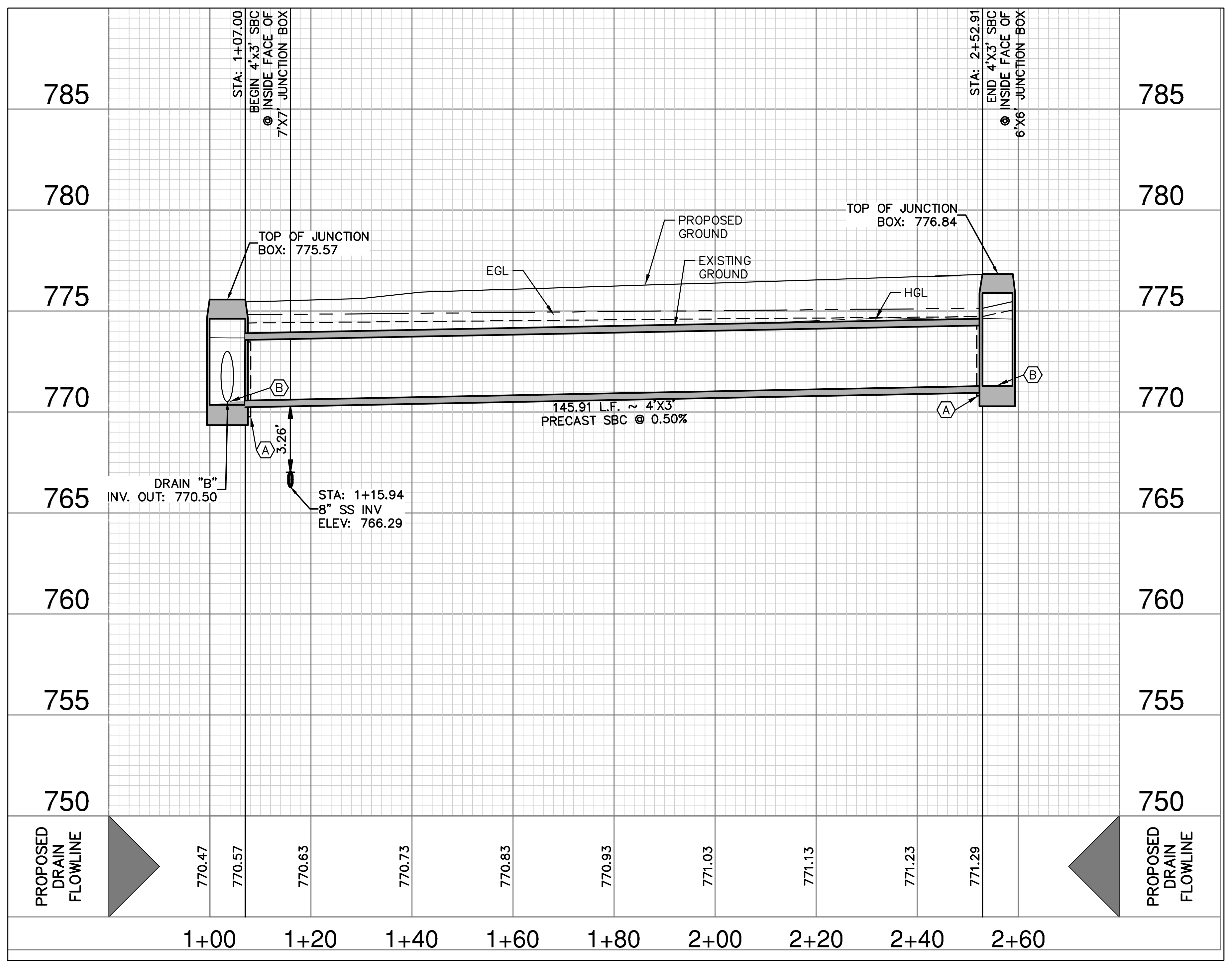
785
780
775
770
765
760
755
750
STA: 1+07.00
BEGIN 4'x3' SBC
@ INSIDE FACE OF
7'X7' JUNCTION BOX
STA: 2+52.91
END 4'X3' SBC
@ INSIDE FACE OF
6'X6' JUNCTION BOX
TOP OF JUNCTION
BOX: 775.57
TOP OF JUNCTION
BOX: 776.84
PROPOSED
GROUND
EXISTING
GROUND
EGL
HGL
B
A
3.26'
145.91 L.F. ~ 4'X3'
PRECAST SBC @ 0.50%
DRAIN "B"
INV. OUT: 770.50
STA: 1+15.94
8" SS INV
ELEV: 766.29
PROPOSED
DRAIN
FLOWLINE
770.47
770.57
770.63
770.73
770.83
770.93
771.03
771.13
771.23
771.29
1+00
1+20
1+40
1+60
1+80
2+00
2+20
2+40
2+60

DRAINAGE & GRADING NOTES:

1. A BEXAR COUNTY ROW PERMIT MUST BE OBTAINED BEFORE WORKING IN BEXAR COUNTY ROW. CONTRACTOR SHALL COORDINATE A TRAFFIC CONTROL PLAN FOR ALL WORK WITHIN THE ROW. ADDITIONAL WARNING SIGNS MAY BE RECOMMENDED BY THE ENGINEER ONCE THE ROADWAYS ARE CONSTRUCTED.
2. THE CONTRACTOR WILL BE RESPONSIBLE FOR DETERMINING EXACT LOCATION OF ALL UTILITIES AND DRAINAGE STRUCTURES WHETHER SHOWN ON THE PLANS OR NOT. THE CONTRACTOR SHALL UNCOVER EXISTING UTILITIES PRIOR TO CONSTRUCTION TO VERIFY SIZE, GRADE, AND LOCATION. THE CONTRACTOR SHALL NOTIFY THE ENGINEER IMMEDIATELY OF ANY DEVIATIONS FROM PLANS PRIOR TO BEGINNING CONSTRUCTION. ANY DAMAGE TO EXISTING UTILITIES, WHETHER SHOWN ON THE PLANS OR NOT, SHALL BE THE CONTRACTOR'S RESPONSIBILITY TO REPAIR, AT HIS EXPENSE.
3. ALL CONCRETE FOR TXDOT DRAINAGE STRUCTURES SHALL MEET TXDOT SPECIFICATIONS. ALL OTHER CONCRETE SHALL BE CLASS "A" 3000 PSI CYLINDER STRENGTH IN 28 DAYS.
4. REFERENCE DRAINAGE DETAILS FOR PIPE TRENCH DETAILS, BOX CULVERT, HEADWALL, AND WINGWALL CONSTRUCTION DETAILS, AND BOX CULVERT BEDDING AND EXCAVATION LIMITS.
5. CONTRACTOR SHALL GROUT ALL CURB INLETS AND JUNCTION BOXES TO PROVIDE FOR POSITIVE DRAINAGE.
6. EARTHEN CHANNELS WILL BE VEGETATED BY SEEDING OR SODDING. 85% OF THE CHANNEL SURFACE MUST HAVE ESTABLISHED VEGETATION BEFORE THE CITY OF SAN ANTONIO WILL ACCEPT.
7. CONTRACTOR SHALL MATCH TOP OF CHANNEL TO NATURAL GROUND AND MAINTAIN A MINIMUM CHANNEL DEPTH OF "D" AS SHOWN IN THE PROFILE.

BEXAR COUNTY FLOOD PLAIN GENERAL CONSTRUCTION NOTES:

1. CONTRACTOR IS TO MAINTAIN UNRESTRICTED DRAINAGE OF THE PROJECT SITE AND ADJACENT AREAS DURING CONSTRUCTION.
2. NO CONSTRUCTION MATERIAL AND/OR WASTE MATERIAL SHALL BE PLACED IN EXISTING LOWS THAT WILL BLOCK OR ALTER FLOW LIMITS OF THE EXISTING NATURAL DRAINAGE OR PLACED WITHIN THE LIMITS OF THE EXISTING FLOOD PLAIN.

TRENCH EXCAVATION SAFETY PROTECTION:

CONTRACTOR AND/ OR CONTRACTOR'S INDEPENDENTLY RETAINED EMPLOYEE OR STRUCTURAL DESIGN/ GEOTECHNICAL/ SAFETY/EQUIPMENT CONSULTANT, IF ANY, SHALL REVIEW THESE PLANS AND ANY AVAILABLE GEOTECHNICAL INFORMATION AND THE ANTICIPATED INSTALLATION SITES WITHIN THE PROJECT WORK AREA IN ORDER TO IMPLEMENT CONTRACTOR'S TRENCH EXCAVATION SAFETY PROTECTION SYSTEMS, PROGRAMS AND /OR PROCEDURES FOR THE PROJECT DESCRIBED IN THE CONTRACT DOCUMENTS. THE CONTRACTOR'S IMPLEMENTATION OF THESE SYSTEMS, PROGRAMS AND/OR PROCEDURES SHALL PROVIDE FOR ADEQUATE TRENCH EXCAVATION SAFETY PROTECTION THAT COMPLY WITH AS A MINIMUM, OSHA STANDARDS FOR TRENCH EXCAVATIONS. SPECIFICALLY, CONTRACTOR AND/OR CONTRACTOR'S INDEPENDENTLY RETAINED EMPLOYEE OR SAFETY CONSULTANT SHALL IMPLEMENT A TRENCH SAFETY PROGRAM IN ACCORDANCE WITH OSHA STANDARDS GOVERNING THE PRESENCE AND ACTIVITIES OF INDIVIDUALS WORKING IN AND AROUND TRENCH EXCAVATION.

CAUTION!!

CONTRACTOR SHALL BE REQUIRED TO LOCATE ALL PUBLIC OR PRIVATE UTILITIES INCLUDING BUT NOT LIMITING TO: WATER, SEWER, TELEPHONE AND FIBER OPTIC LINES, SITE LIGHTING ELECTRIC, SECONDARY ELECTRIC, PRIMARY ELECTRICAL DUCTBANKS, LANDSCAPE IRRIGATION FACILITIES, AND GAS LINES. ANY UTILITY CONFLICTS THAT ARISE SHOULD BE COMMUNICATED TO THE ENGINEER IMMEDIATELY AND PRIOR TO CONSTRUCTION. THE CONTRACTOR SHALL CONTACT 1–800–DIG–TESS A MINIMUM OF 48 HOURS PRIOR TO THE START OF CONSTRUCTION. ANY DAMAGE TO EXISTING UTILITIES SHALL BE THE SOLE RESPONSIBILITY OF THE CONTRACTOR AND THE REPAIR SHALL BE AT CONTRACTOR'S SOLE EXPENSE WHETHER THE UTILITY IS SHOWN ON THESE PLANS OR NOT.

NO.	REVISION	DATE

CALEB M. CHANCE
98401
5/29/25

PAPE-DAWSON ENGINEERS
2000 NW LOOP 410 I SAN ANTONIO, TX 78213 I 210.375.9000
TEXAS ENGINEERING FIRM #470 I TEXAS SURVEYING FIRM #10028800

STONEHILL UNITS 2B & 6A
SAN ANTONIO, TEXAS

DRAIN C PLAN & PROFILE
(STA. 1+07.00 TO END)

PLAT NO. 24-11800312
JOB NO. 12456–13
DATE JULY 2024
DESIGNER RA
CHECKED BL DRAWN EG
SHEET C1.05

Date: May 30, 2025, 8:59am User ID: ralvarez
File: P:\124\56\13\Design\Civil\SDC-1245613.dwg

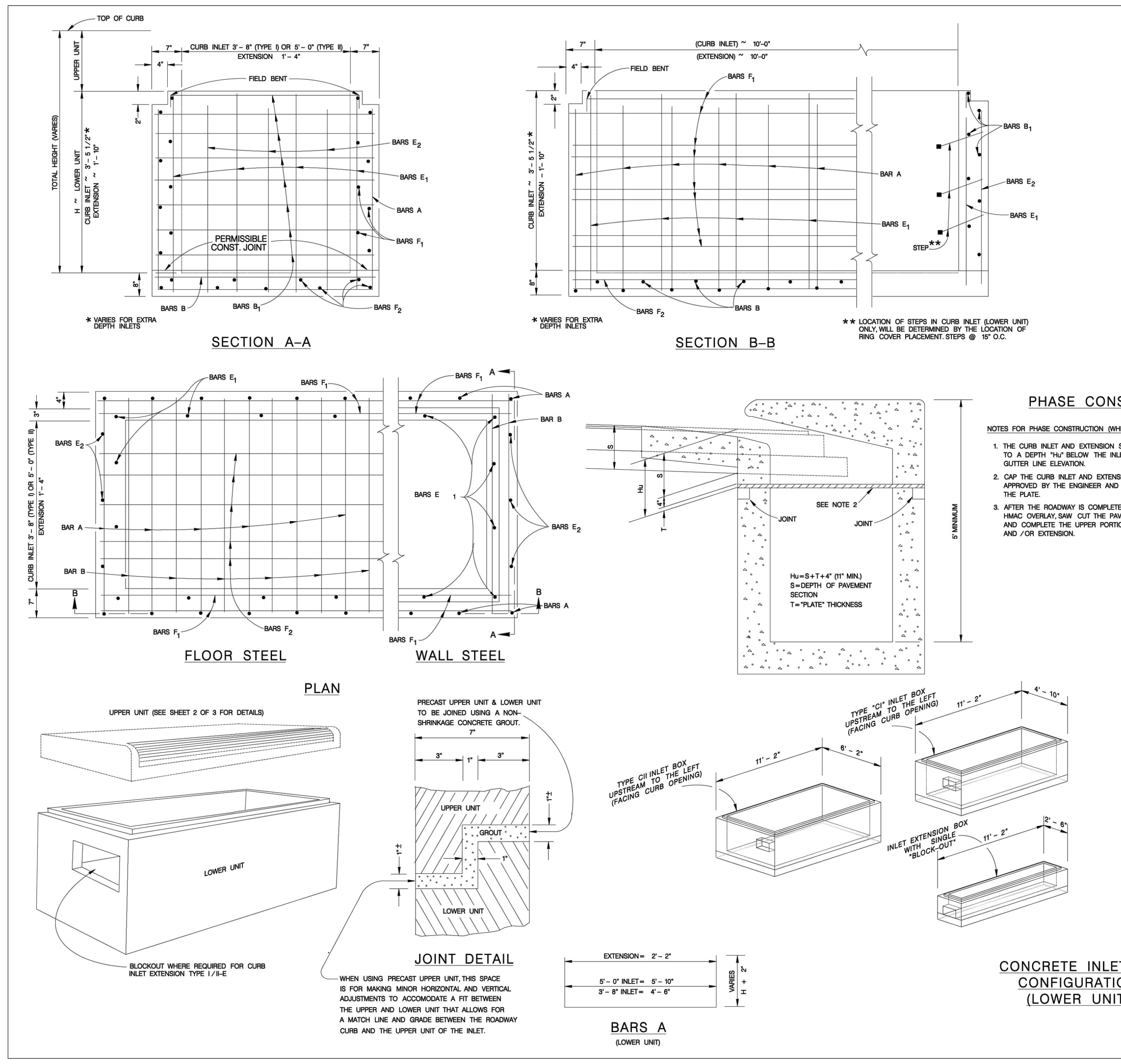
SECTION A–A
SECTION B–B
FLOOR STEEL
WALL STEEL
PLAN
JOINT DETAIL
BARS A
(LOWER UNIT)
PERMISSIBLE CONST. JOINT
FIELD BENT
★ VARIES FOR EXTRA DEPTH INLETS
★ LOCATION OF STEPS IN CURB INLET (LOWER UNIT) ONLY, WILL BE DETERMINED BY THE LOCATION OF RING COVER PLACEMENT. STEPS @ 15" O.C.
5' MINIMUM
Hu=8+T+4" (11" MIN.)
BLOCKOUT WHERE REQUIRED FOR CURB INLET EXTENSION TYPE I / II-E
PRECAST UPPER UNIT & LOWER UNIT TO BE JOINED USING A NON-SHRINKAGE CONCRETE GROUT.
WHEN USING PRECAST UPPER UNIT, THIS SPACE IS FOR MAKING MINOR HORIZONTAL AND VERTICAL ADJUSTMENTS TO ACCOMODATE A FIT BETWEEN THE UPPER AND LOWER UNIT THAT ALLOWS FOR A MATCH LINE AND GRADE BETWEEN THE ROADWAY CURB AND THE UPPER UNIT OF THE INLET.

REINFORCING STEEL

LOWER UNIT 10' X 3' – 8" (TYPE I)				
BAR	NO.	SIZE	SPAC.	LENGTH
A	12	#4	12"	VARIES
B	11	#4	12"	4'–6"
B_1	VARIES	#4	12"	4'–6"
E_1	20	#4	18" ±	VARIES
E_2	6	#4	18" ±	VARIES
F_1	VARIES	#4	12" ±	10'–10"
F_2	9	#4	—	10'–10"

LOWER UNIT 10' X 5' – 0" (TYPE II)				
BAR	NO.	SIZE	SPAC.	LENGTH
A	12	#4	12"	VARIES
B	11	#4	12"	5'–10"
B_1	VARIES	#4	12"	5'–10"
E_1	22	#4	18" ±	VARIES
E_2	8	#4	18" ±	VARIES
F_1	VARIES	#4	12" ±	10'–10"
F_2	11	#4	—	10'–10"

GENERAL NOTES

1. 5' INLETS AND 5' EXTENSIONS MUST BE IN ACCORDANCE WITH THE LATEST TXDOT CURB INLET TYPE "C" AND EXTENSION TYPE E (IL–C).
2. TYPE C–II INLET TO BE USED ONLY WHEN STORM DRAIN PIPE IS IN–LINE WITH CURB INLET AND APPROVED BY THE ENGINEER.
3. QUANTITIES SHOWN ARE FOR CONTRACTORS INFORMATION ONLY.
4. CONCRETE FOR STRUCTURES SHALL BE CLASS "A", 3000 PSI IN 28 DAYS.
5. ALL DIMENSIONS RELATING TO REINFORCING STEEL ARE TO CENTER OF BARS.
6. ALL REINFORCING STEEL SHALL HAVE A MINIMUM COVER OF 1 1/2".
7. ALL REINFORCING STEEL SHALL CONFORM TO A.S.T.M. A–615, GRADE 60 REQUIREMENTS.
8. ALL EXPOSED CORNERS SHALL BE CHAMFERED 3/4".
9. DEPRESSION SLAB SHALL RECEIVE A WOOD FLOAT FINISH.
10. FACE OF INLET TO CONFORM TO FACE OF CURB LINE.
11. ALL BARS INTERCEPTING MANHOLE RING & COVER SHALL BE CUT OR BENT.
12. PAYMENT FOR ALL EXCAVATION, BACK–FILLING, CONCRETE, REINFORCING STEEL, RING AND COVER, CURB ARMOR AND STEPS SHALL BE INCLUDED IN THE UNIT COST OF ITEM 403 "STORM SEWER JUNCTION BOXES AND INLETS".
13. CAST IRON MANHOLE RING AND COVER TO BE PLACED NEXT TO OUTLET PIPE, EXCEPT FOR VERTICAL OUTLET PIPE IN WHICH CASE MANHOLE RING AND COVER WILL BE OFFSET.
14. GALVANIZED BOLTS, NUTS, WASHERS, PLATES AND GASKETS ARE SUBSIDIARY TO INLETS.
15. THE CONTRACTOR SHALL PROVIDE AN ADEQUATE MEANS TO LIFT AND PLACE THE INLETS, WHEN USING PRECAST UNITS.
16. ALL BARS AT PIPE BLOCKOUT LOCATIONS SHALL BE CUT OR BEND.
17. ALL LOWER UNITS SHALL RECEIVE INVERT MORTAR SHAPING.
18. PIPE BLOCKOUTS IN INLET WALLS SHOULD NOT EXCEED 3" BEYOND THE OUTER SHELL OF THE PIPE, TAKING INTO ACCOUNT THE SKEW OF THE PIPE AS NECESSARY. CONSTRUCTION JOINT MAY BE RAISED A MAXIMUM OF 6".

PHASE CONSTRUCTION

NOTES FOR PHASE CONSTRUCTION (WHEN DIRECTED BY THE ENGINEER):

1. THE CURB INLET AND EXTENSION SHALL BE CONSTRUCTED TO A DEPTH "Hu" BELOW THE INLET AND EXTENSION GUTTER LINE ELEVATION.
2. CAP THE CURB INLET AND EXTENSION WITH A STEEL PLATE APPROVED BY THE ENGINEER AND CONSTRUCT THE ROADWAY OVER THE PLATE.
3. AFTER THE ROADWAY IS COMPLETED, BUT PRIOR TO THE FINAL HMAC OVERLAY, SAW CUT THE PAVEMENT, REMOVE THE PLATE AND COMPLETE THE UPPER PORTION OF THE CURB INLET AND /OR EXTENSION.

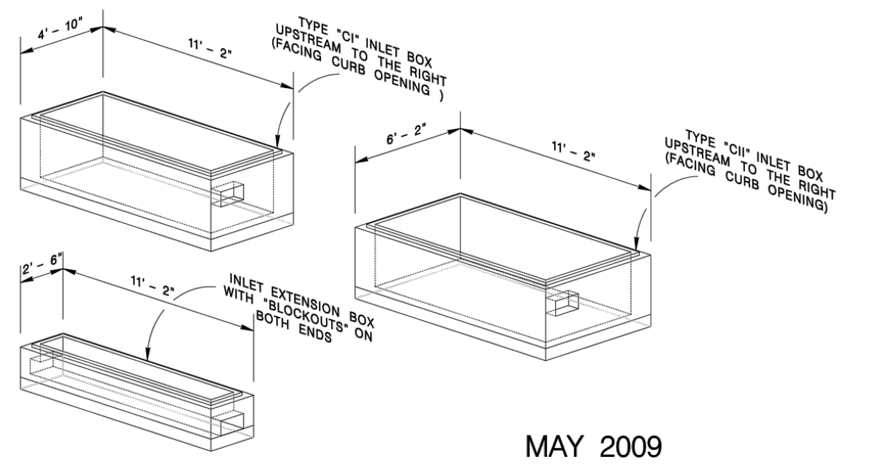
TYPE "CI" INLET BOX UPSTREAM TO THE LEFT (FACING CURB OPENING)
TYPE "CI" INLET BOX UPSTREAM TO THE RIGHT (FACING CURB OPENING)
INLET EXTENSION BOX WITH SINGLE "BLOCK-OUT"
INLET EXTENSION BOX WITH "BLOCKOUTS" ON BOTH ENDS
11' – 2"
4' – 10"

CONCRETE INLET BOX CONFIGURATIONS (LOWER UNITS)

MAY 2009

CITY OF SAN ANTONIO
CAPITAL IMPROVEMENTS MANAGEMENT SERVICES DEPARTMENT

TYPE "C" INLET (TYPE I & II)
& INLET EXTENSION STANDARDS
SHEET 1 OF 3

____% SUBMITTAL | PROJECT NO.:________ | DATE:________
DRWN. BY: V. VASQUEZ | DSGN. BY: L.E. MALTOS, P.E. | CHKD. BY: R.S. HOSSEINI, P.E. | SHEET NO.:____OF____

NOT USED
(CONTRACTOR SHALL NOTIFY ENGINEER IF USED)

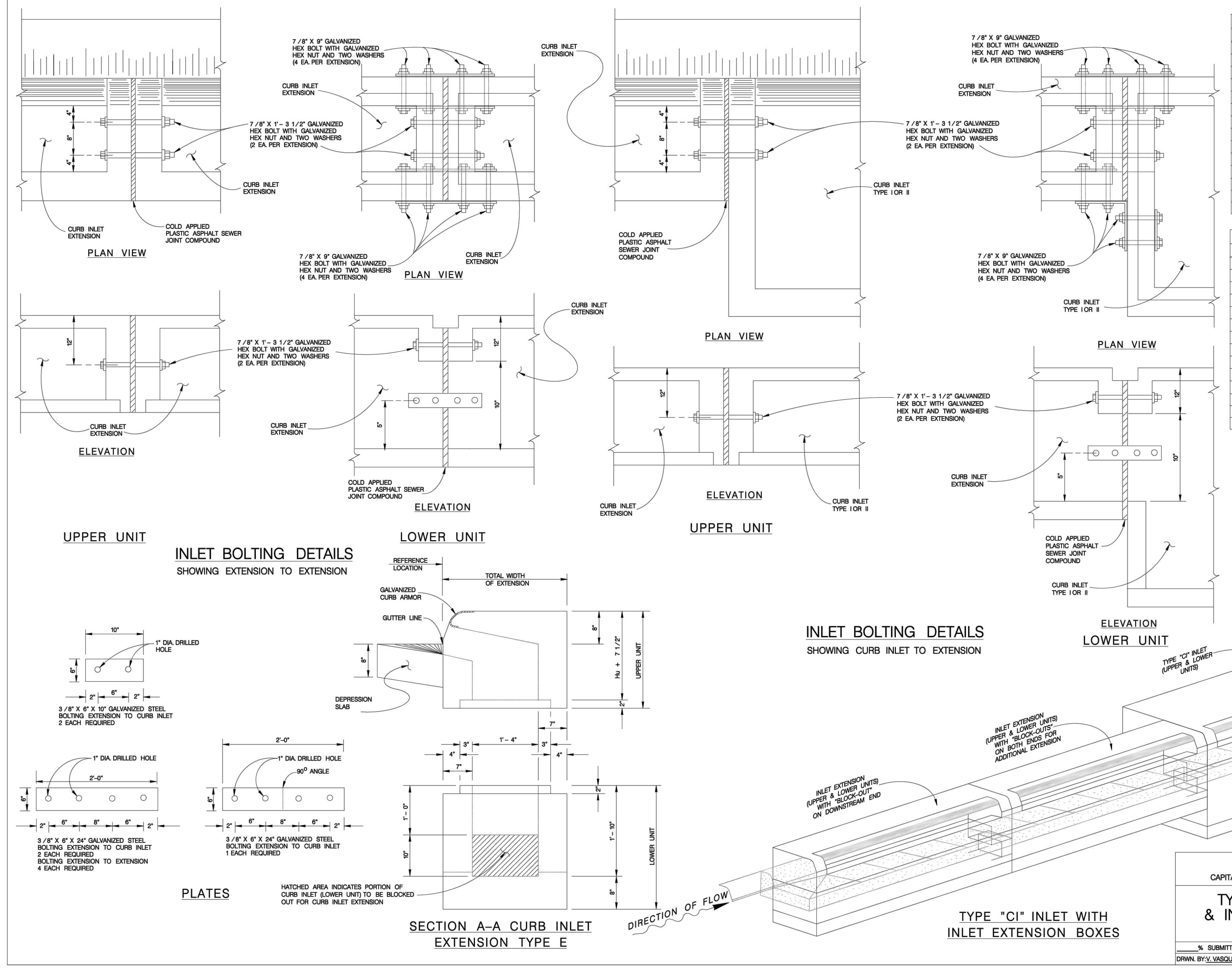
PLAN VIEW
ELEVATION
UPPER UNIT
LOWER UNIT
INLET BOLTING DETAILS
SHOWING EXTENSION TO EXTENSION
INLET BOLTING DETAILS
SHOWING CURB INLET TO EXTENSION
PLATES
SECTION A–A CURB INLET EXTENSION TYPE E
TYPE "CI" INLET WITH INLET EXTENSION BOXES
DIRECTION OF FLOW
7/8" X 8" GALVANIZED HEX BOLT WITH GALVANIZED HEX NUT AND TWO WASHERS (4 EA PER EXTENSION)
7/8" X 1' – 3 1/2" GALVANIZED HEX BOLT WITH GALVANIZED HEX NUT AND TWO WASHERS (2 EA PER EXTENSION)
COLD APPLIED PLASTIC ASPHALT SEWER JOINT COMPOUND
CURB INLET EXTENSION
3/8" X 6" X 24" GALVANIZED STEEL BOLTING EXTENSION TO CURB INLET
1" DIA. DRILLED HOLE
HATCHED AREA INDICATES PORTION OF CURB INLET (LOWER UNIT) TO BE BLOCKED OUT FOR INLET EXTENSION

UPPER UNIT EXTENSION (FOR Hu = 11")					
BAR	NO.	SIZE	SPAC.	LENGTH	WEIGHT
A	4	#4	—	15' – 2"	41
B	3	#4	—	14' – 2"	28
C	3	#4	11"	13' – 2"	26
D	3	#4	6"	10' – 10"	22
E	8	#4	11"	1 '– 2"	6
F	21	#6	6"	2' – 0"	63
G	22	#6	6"	3' – 4"	110
H	4	#4	—	10' – 10"	29
J	12	#4	12"	3' – 6"	28
L	4	#4	—	2' – 0"	5
M	3	#4	—	14' – 8"	29
REINFORCING STEEL				LBS.	387
CLASS "A" CONCRETE				C.Y.	1.0

LOWER UNIT EXTENSION					
BAR	NO.	SIZE	SPAC.	LENGTH	WEIGHT
A	12	#4	12"	6' – 2"	49
B	11	#4	12"	2' – 2"	16
B_1	3	#4	12"	2' – 2"	4
E_1	18	#4	18" ±	2' – 3"	27
E_2	4	#4	18" ±	2' – 1"	6
F_1	16	#4	12" ±	10' – 10"	116
F_2	5	#4	—	10' – 10"	36
REINFORCING STEEL				LBS.	254
CLASS. "A" CONCRETE				C.Y.	1.4

GENERAL NOTES

1. WHEN INLET EXTENSIONS ARE REQUIRED FOR ON GRADE INLETS THE EXTENSION(S) SHALL BE PLACED ON THE UPSTREAM END OF THE INLET.
2. FOR CURB INLET EXTENSION REINFORCING STEEL, NOTES & VARIOUS OTHER APPLICABLE DETAILS NOT FOUND ON THIS SHEET, REFER TO SHEETS 1 & 2.

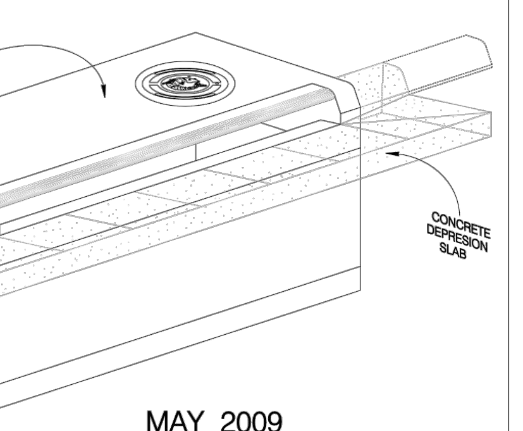
TYPE "CI" INLET (UPPER & LOWER UNITS)
CONCRETE DEPRESSION SLAB

MAY 2009

CITY OF SAN ANTONIO
CAPITAL IMPROVEMENTS MANAGEMENT SERVICES DEPARTMENT

TYPE "C" INLET (TYPE I & II)
& INLET EXTENSION STANDARDS
SHEET 3 OF 3

____% SUBMITTAL | PROJECT NO.:________ | DATE:________
DRWN. BY: V. VASQUEZ | DSGN. BY: L.E. MALTOS, P.E. | CHKD. BY: R.S. HOSSEINI, P.E. | SHEET NO.:____OF____

NOT USED
(CONTRACTOR SHALL NOTIFY ENGINEER IF USED)

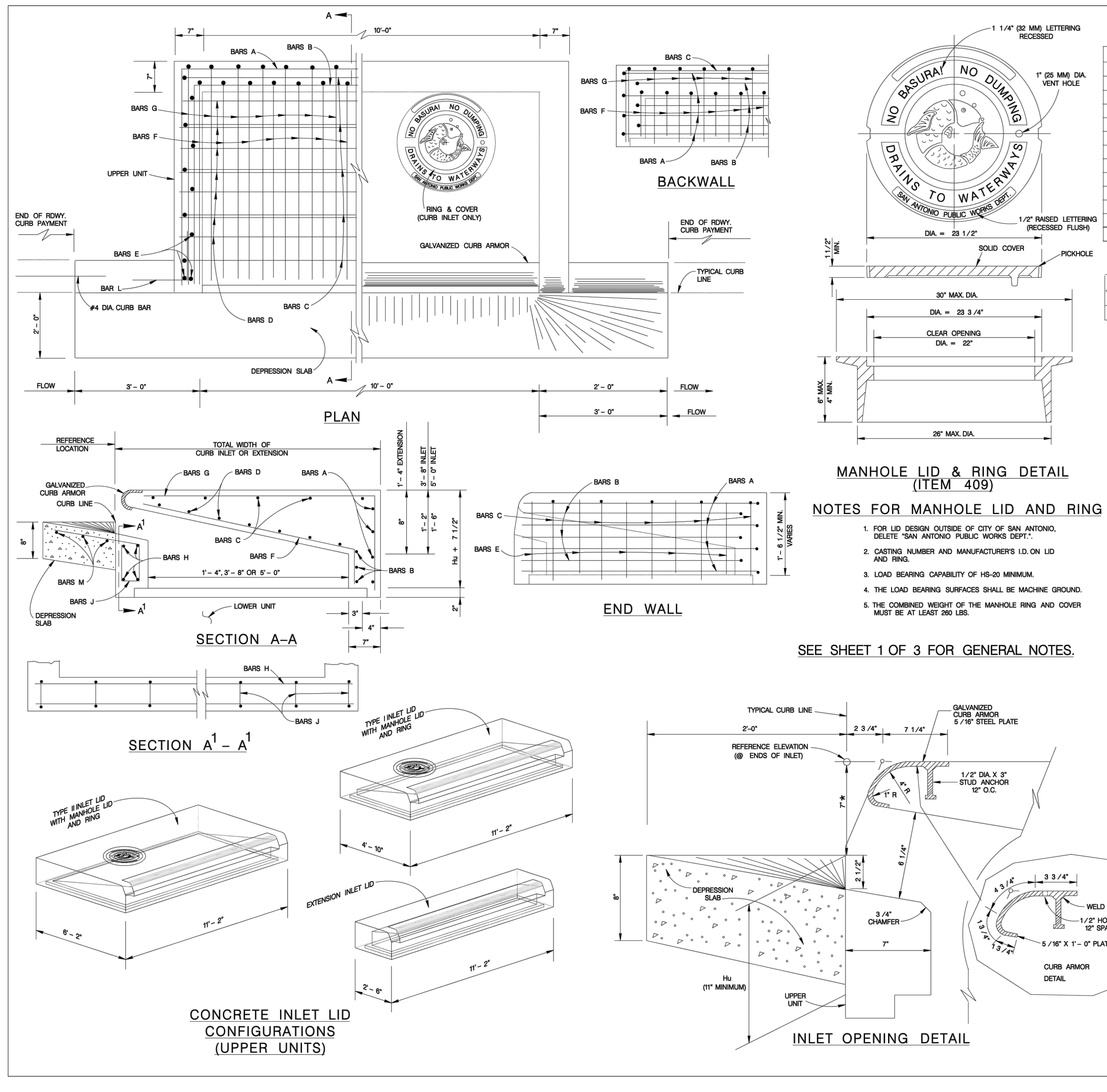
PLAN
BACKWALL
SECTION A–A
END WALL
SECTION A¹ – A¹
CONCRETE INLET LID CONFIGURATIONS (UPPER UNITS)
NO DUMPING
DRAINS TO WATERWAYS
RING & COVER (CURB INLET ONLY)
GALVANIZED CURB ARMOR
DEPRESSION SLAB
END OF ROADWAY CURB PAVEMENT
TYPICAL CURB LINE
REFERENCE LOCATION
1 1/4" (32 MM) LETTERING RECESSED
1" (25 MM) DIA. VENT HOLE
1/2" RAISED LETTERING (RECESSED FLUSH)
PICKHOLE
SOLID COVER
DIA. = 22"
26" MAX. DIA.
6" MAX. 4" MIN.

MANHOLE LID & RING DETAIL (ITEM 409)

NOTES FOR MANHOLE LID AND RING

1. FOR LID DESIGN OUTSIDE OF CITY OF SAN ANTONIO, DELETE "SAN ANTONIO PUBLIC WORKS DEPT.".
2. CASTING NUMBER AND MANUFACTURER'S I.D. ON LID AND RING.
3. LOAD BEARING CAPABILITY OF HS–20 MINIMUM.
4. THE LOAD BEARING SURFACES SHALL BE MACHINE GROUND.
5. THE COMBINED WEIGHT OF THE MANHOLE RING AND COVER MUST BE AT LEAST 260 LBS.

SEE SHEET 1 OF 3 FOR GENERAL NOTES.

REINFORCING STEEL (FOR Hu = 11")

UPPER UNIT 10' X 3'–8" (TYPE I)					
BAR	NO.	SIZE	SPAC.	LENGTH	WEIGHT
A	4	#4	—	19'–10"	53
B	3	#4	—	18'–10"	38
C	5	#4	11"	13'–2"	44
D	7	#4	6"	10'–10"	51
E	12	#4	11"	1'–2"	9
F	21	#6	6"	4'–8"	147
G	22	#6	6"	5'–8"	187
H	4	#4	—	10'–10"	29
J	12	#4	12"	3'–6"	28
L	4	#4	—	2'–0"	5
M	3	#4	—	14'–8"	29
TOTAL WEIGHT					620 LBS.

UPPER UNIT 10' X 5' (TYPE II)					
BAR	NO.	SIZE	SPAC.	LENGTH	WEIGHT
A	4	#4	—	22'–6"	60
B	3	#4	—	21'–6"	43
C	7	#4	11"	13'–2"	62
D	11	#4	6"	10'–10"	80
E	16	#4	11"	1'–2"	13
F	21	#6	6"	5'–8"	179
G	22	#6	6"	7'–0"	231
H	4	#4	—	10'–10"	29
J	12	#4	12"	3'–6"	28
L	4	#4	—	2'–0"	5
M	3	#4	—	14'–8"	29
TOTAL WEIGHT					759 LBS.

CLASS "A" CONCRETE QUANTITIES (FOR Hu = 11")

DEPRESSION SLAB	C.Y.
10' INLET	0.7
10' EXTENSION	0.7

UPPER UNIT (ONLY)	C.Y.
10' X 3'–8" CURB INLET	1.9
10' X 5'–0" CURB INLET	2.7
10' EXTENSION	1.0

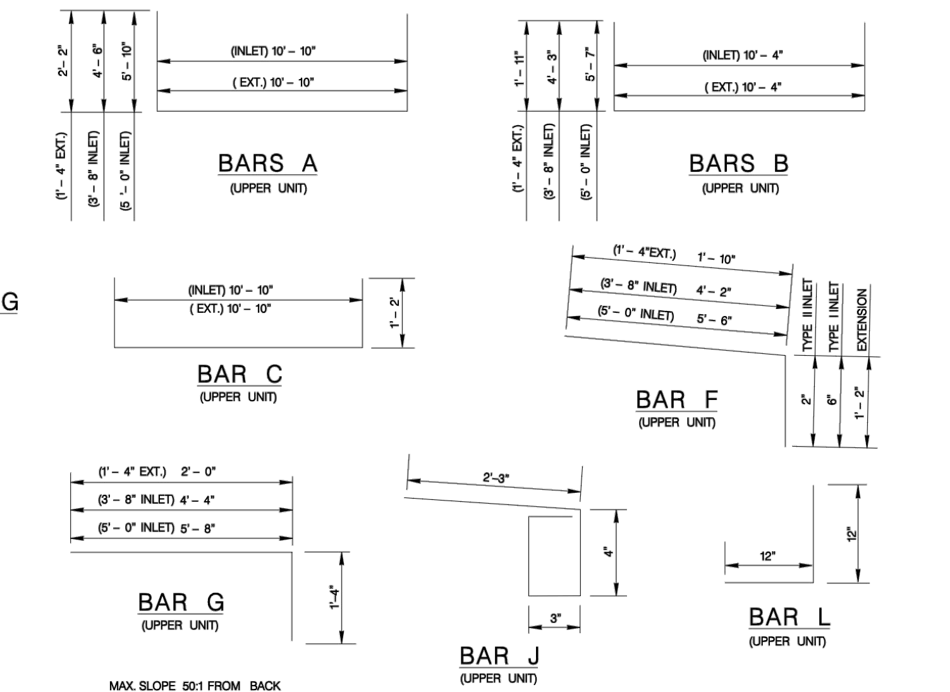
BARS A
(UPPER UNIT)
BARS B
(UPPER UNIT)
BAR C
(UPPER UNIT)
BAR F
(UPPER UNIT)
BAR G
(UPPER UNIT)
BAR J
(UPPER UNIT)
BAR L
(UPPER UNIT)
(INLET) 10' – 10"
(EXT.) 10' – 10"
(INLET) 10' – 4"
(EXT.) 10' – 4"

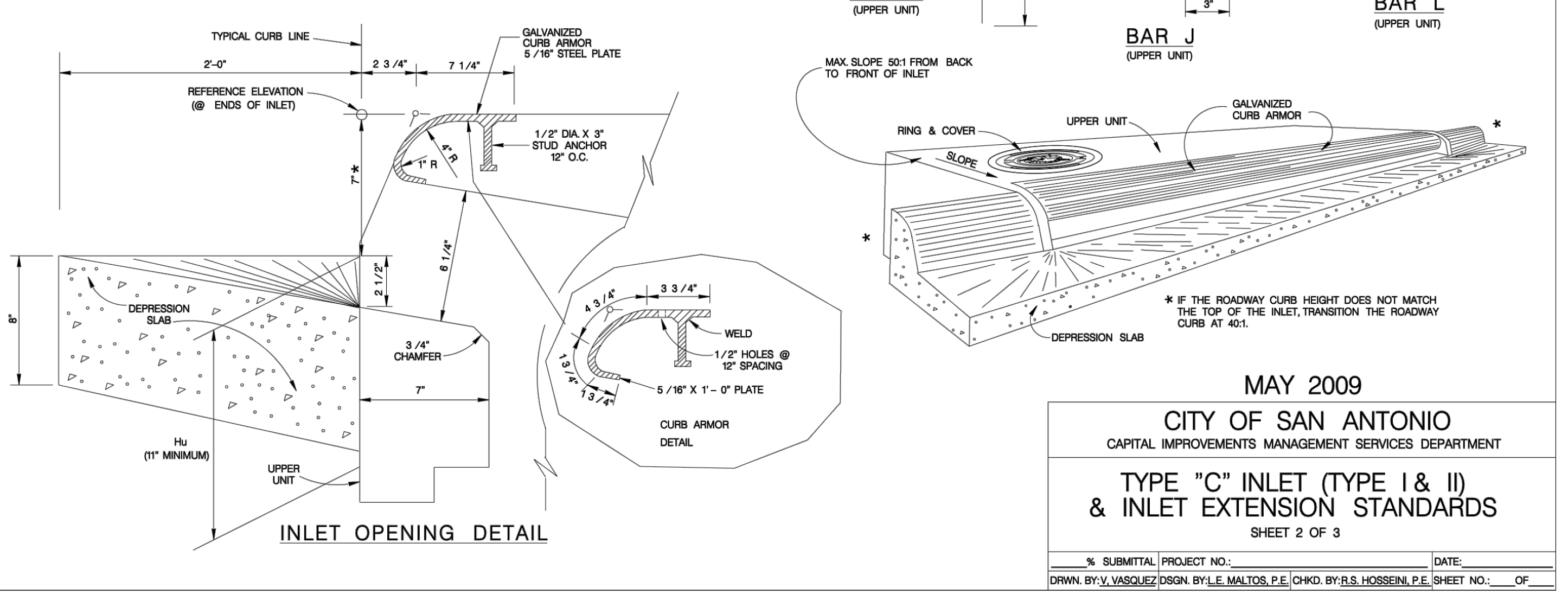
INLET OPENING DETAIL
TYPICAL CURB LINE
REFERENCE ELEVATION (@ ENDS OF INLET)
GALVANIZED CURB ARMOR 5/16" STEEL PLATE
1/2" DIA. X 3" STUD ANCHOR 12" O.C.
2'–0"
2 3/4"
7 1/4"
CURB ARMOR DETAIL
MAX. SLOPE 501 FROM BACK TO FRONT OF INLET
RING & COVER
UPPER UNIT
DEPRESSION SLAB
★ IF THE ROADWAY CURB HEIGHT DOES NOT MATCH THE TOP OF THE INLET, TRANSITION THE ROADWAY CURB AT 40:1.

MAY 2009

CITY OF SAN ANTONIO
CAPITAL IMPROVEMENTS MANAGEMENT SERVICES DEPARTMENT

TYPE "C" INLET (TYPE I & II)
& INLET EXTENSION STANDARDS
SHEET 2 OF 3

____% SUBMITTAL | PROJECT NO.:________ | DATE:________
DRWN. BY: V. VASQUEZ | DSGN. BY: L.E. MALTOS, P.E. | CHKD. BY: R.S. HOSSEINI, P.E. | SHEET NO.:____OF____

NOT USED
(CONTRACTOR SHALL NOTIFY ENGINEER IF USED)

BOX DATA

SECTION DIMENSIONS					Fill Height	M (Min)	REINFORCING (sq. in. / ft.) ②							① Lift Weight
S (ft.)	H (ft.)	TT (in.)	TB (in.)	TS (in.)	(ft.)	(in.)	AS1	AS2	AS3	AS4	AS5	AS7	AS8	(tons)
5	2	8	7	6	< 2	–	0.19	0.27	0.18	0.14	0.19	0.19	0.17	6.0
5	2	6	6	6	2 < 3	44	0.22	0.20	0.16	0.14	–	–	–	5.1
5	2	6	6	6	3 – 5	44	0.16	0.14	0.14	0.14	–	–	–	5.1
5	2	6	6	6	10	36	0.15	0.14	0.14	0.14	–	–	–	5.1
5	2	6	6	6	15	36	0.20	0.18	0.18	0.14	–	–	–	5.1
5	2	6	6	6	20	36	0.26	0.23	0.24	0.14	–	–	–	5.1
5	2	6	6	6	25	36	0.33	0.29	0.29	0.14	–	–	–	5.1
5	2	6	6	6	30	36	0.39	0.34	0.35	0.14	–	–	–	5.1
5	3	8	7	6	< 2	–	0.19	0.31	0.21	0.14	0.19	0.19	0.17	6.6
5	3	6	6	6	2 < 3	45	0.18	0.24	0.19	0.14	–	–	–	5.7
5	3	6	6	6	3 – 5	36	0.14	0.17	0.16	0.14	–	–	–	5.7
5	3	6	6	6	10	36	0.14	0.16	0.17	0.14	–	–	–	5.7
5	3	6	6	6	15	35	0.16	0.21	0.22	0.14	–	–	–	5.7
5	3	6	6	6	20	35	0.21	0.27	0.28	0.14	–	–	–	5.7
5	3	6	6	6	25	35	0.26	0.34	0.34	0.14	–	–	–	5.7
5	3	6	6	6	30	35	0.31	0.41	0.41	0.14	–	–	–	5.7
5	4	8	7	6	< 2	–	0.19	0.33	0.24	0.14	0.19	0.19	0.17	7.2
5	4	6	6	6	2 < 3	45	0.16	0.27	0.22	0.14	–	–	–	6.3
5	4	6	6	6	3 – 5	45	0.14	0.19	0.18	0.14	–	–	–	6.3
5	4	6	6	6	10	36	0.14	0.18	0.18	0.14	–	–	–	6.3
5	4	6	6	6	15	35	0.14	0.23	0.24	0.14	–	–	–	6.3
5	4	6	6	6	20	35	0.17	0.30	0.31	0.14	–	–	–	6.3
5	4	6	6	6	25	35	0.21	0.37	0.38	0.14	–	–	–	6.3
5	4	6	6	6	30	35	0.25	0.44	0.45	0.14	–	–	–	6.3
5	5	8	7	6	< 2	–	0.19	0.35	0.26	0.14	0.19	0.19	0.17	7.8
5	5	6	6	6	2 < 3	45	0.14	0.29	0.24	0.14	–	–	–	6.9
5	5	6	6	6	3 – 5	45	0.14	0.21	0.20	0.14	–	–	–	6.9
5	5	6	6	6	10	45	0.14	0.19	0.20	0.14	–	–	–	6.9
5	5	6	6	6	15	36	0.14	0.24	0.25	0.14	–	–	–	6.9
5	5	6	6	6	20	35	0.15	0.31	0.32	0.14	–	–	–	6.9
5	5	6	6	6	25	35	0.18	0.38	0.39	0.14	–	–	–	6.9
5	5	6	6	6	30	35	0.21	0.46	0.47	0.14	–	–	–	6.9

DISCLAIMER:
The use of this standard is governed by the "Texas Engineering Practice Act". No warranty of any kind is made by TxDOT for any purpose whatsoever. TxDOT assumes no responsibility for the conversion of this standard to other formats or for incorrect results or damages resulting from its use.

① For box length = 8'–0"

② AS1 thru AS4, AS7 and AS8 are minimum required areas of reinforcement per linear foot of box length. AS5 is minimum required area of reinforcement per linear foot of box width.

DATE:
FILE:

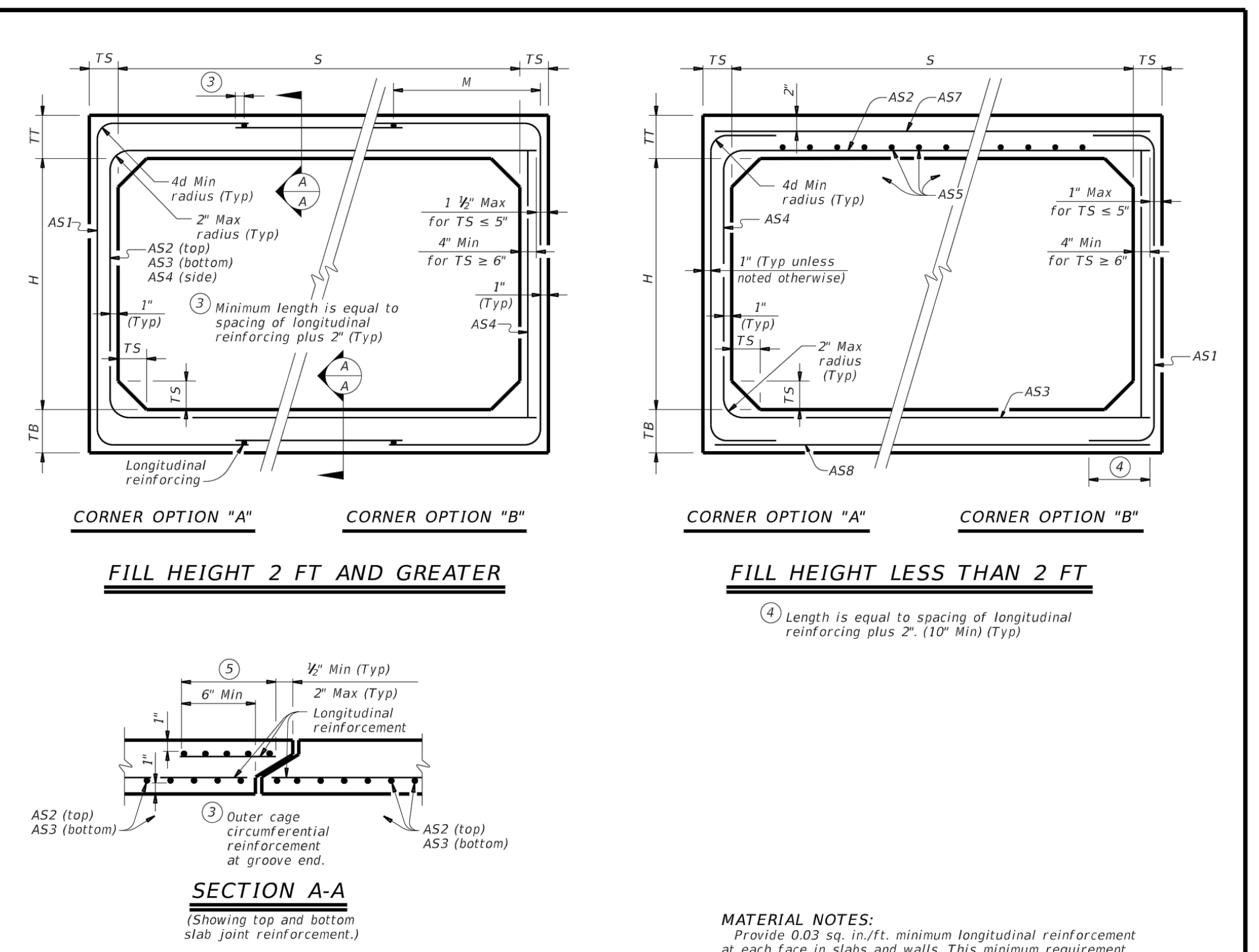
CORNER OPTION "A"
CORNER OPTION "B"
FILL HEIGHT 2 FT AND GREATER
FILL HEIGHT LESS THAN 2 FT
SECTION A-A
(Showing top and bottom slab joint reinforcement.)
④ Length is equal to spacing of longitudinal reinforcing plus 2". (10" Min) (Typ)
③ Minimum length is equal to spacing of longitudinal reinforcing plus 2" (Typ)
4d Min radius (Typ)
2" Max radius (Typ)
AS2 (top)
AS3 (bottom)
AS4 (side)
Longitudinal reinforcing
⑤ Outer cage circumferential reinforcement at groove end.
TS
S
H
TT
TB
AS1
AS5
AS8

MATERIAL NOTES:
Provide 0.03 sq. in./ft. minimum longitudinal reinforcement at each face in slabs and walls. This minimum requirement may be met by the transverse wires when wire mesh reinforcement is used.
Provide Class H concrete (f`c = 5,000 psi).

GENERAL NOTES:
Designs shown conform to ASTM C1577. Refer to ASTM C1577 for information or details not shown.
See Box Culverts Precast Miscellaneous Details (SCP-MD) standard sheet for details and notes not shown.
In lieu of furnishing the designs shown on this sheet, the contractor may furnish an alternate design that is equal to or exceeds the box design for the design fill height in the table. Submit shop plans for alternate designs in accordance with Item "Precast Concrete Structural Members (Fabrication)".

HL93 LOADING

Texas Department of Transportation
Bridge Division Standard

SINGLE BOX CULVERTS
PRECAST
5'-0" SPAN

SCP-5

FILE:	scp05sts-20.dgn	DN: TxDOT	CK: TxDOT	DW: TxDOT	CK: TxDOT
©TxDOT	February 2020	CONT	SECT	JOB	HIGHWAY
REVISIONS		DIST	COUNTY		SHEET NO.

NO.	REVISION	DATE

CALEB M. CHANCE
98401
Caleb Chance 5/29/25

PAPE-DAWSON ENGINEERS
2000 NW LOOP 410 | SAN ANTONIO, TX 78213 | 210.375.9000
TEXAS ENGINEERING FIRM #470 | TEXAS SURVEYING FIRM #10028800

STONEHILL UNITS 2B & 6A
SAN ANTONIO, TEXAS

DRAINAGE DETAILS

PLAT NO. 24-11800312
JOB NO. 12456–13
DATE JULY 2024
DESIGNER RA
CHECKED BL DRAWN RA
SHEET C1.10

Date: May 30, 2025, 8:59am User ID: ralvarez
File: P:\124\56\13\Design\Civil\SDDT-1245613.dwg

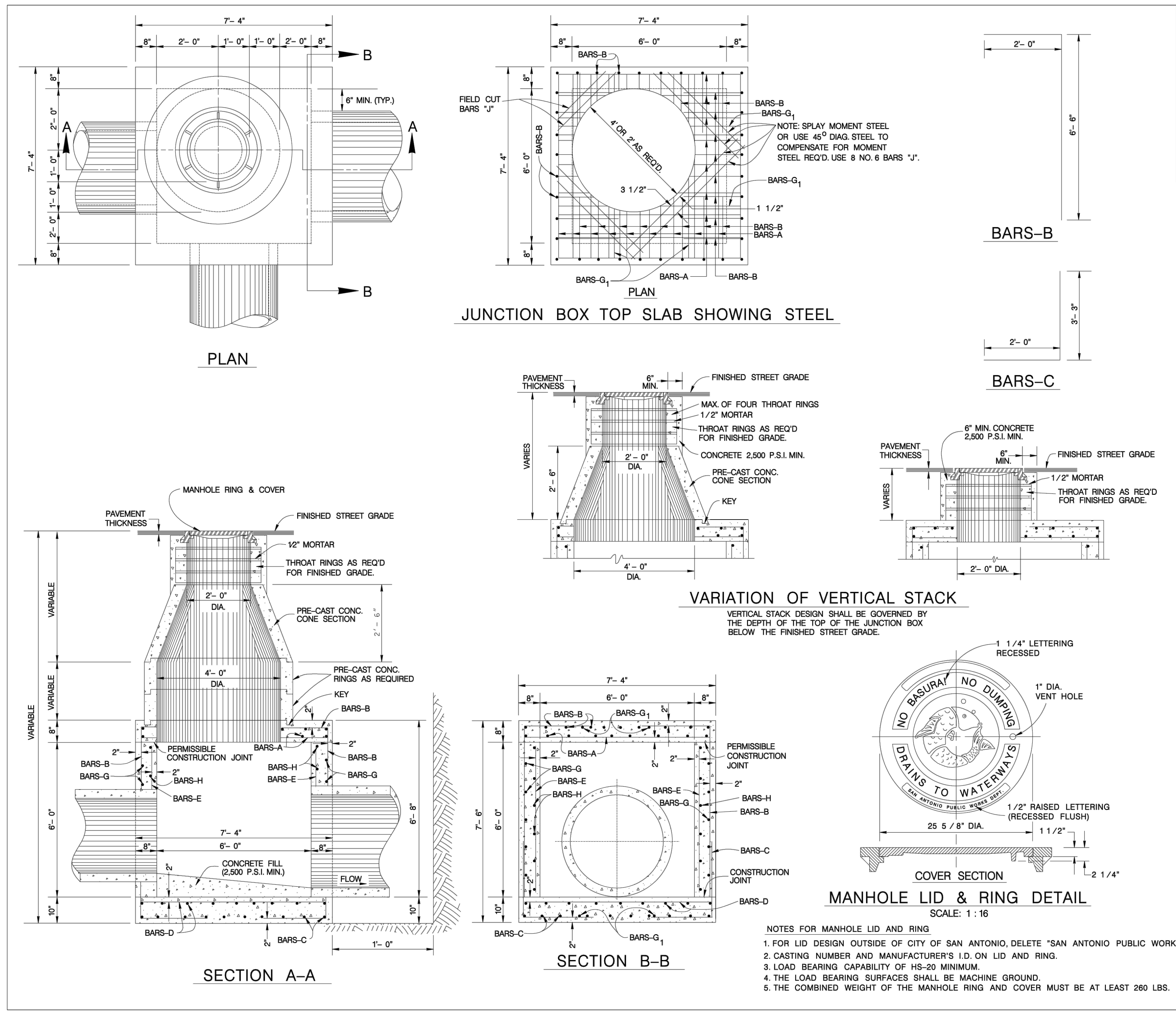
7'- 4"
B
A
6" MIN. (TYP.)
FIELD CUT BARS "J"
NOTE: SPLAY MOMENT STEEL OR USE 45° DIAG. STEEL TO COMPENSATE FOR MOMENT STEEL REQ'D. USE 8 NO. 6 BARS "J".
4'-0" Z AS REQ'D
3 1/2"
BARS-B
BARS-G₁
BARS-A
2'- 0"
6'- 6"
3'- 3"
PAVEMENT THICKNESS
FINISHED STREET GRADE
MAX OF FOUR THROAT RINGS
1/2" MORTAR
THROAT RINGS AS REQ'D FOR FINISHED GRADE.
CONCRETE 2,500 P.S.I. MIN.
PRE-CAST CONC. CONE SECTION
KEY
6" MIN. CONCRETE 2,500 P.S.I. MIN.
VARIES
MANHOLE RING & COVER
PRE-CAST CONC. RINGS AS REQUIRED
PERMISSIBLE CONSTRUCTION JOINT
CONCRETE FILL (2,500 P.S.I. MIN.)
FLOW
VARIABLE
BARS-B
BARS-G
BARS-H
BARS-E
BARS-C
BARS-D
CONSTRUCTION JOINT
1 1/4" LETTERING RECESSED
1" DIA. VENT HOLE
NO DUMPING
NO BASURA
DRAINS TO WATERWAYS
SAN ANTONIO PUBLIC WORKS DEPT.
1/2" RAISED LETTERING (RECESSED FLUSH)
25 5/8" DIA.
1 1/2"
2 1/4"

PLAN

JUNCTION BOX TOP SLAB SHOWING STEEL

BARS–B

BARS–C

VARIATION OF VERTICAL STACK

VERTICAL STACK DESIGN SHALL BE GOVERNED BY THE DEPTH OF THE TOP OF THE JUNCTION BOX BELOW THE FINISHED STREET GRADE.

SECTION A–A

SECTION B–B

COVER SECTION

MANHOLE LID & RING DETAIL

SCALE: 1 : 16

NOTES FOR MANHOLE LID AND RING

1. FOR LID DESIGN OUTSIDE OF CITY OF SAN ANTONIO, DELETE "SAN ANTONIO PUBLIC WORKS DEPT.".
2. CASTING NUMBER AND MANUFACTURER'S I.D. ON LID AND RING.
3. LOAD BEARING CAPABILITY OF HS–20 MINIMUM.
4. THE LOAD BEARING SURFACES SHALL BE MACHINE GROUND.
5. THE COMBINED WEIGHT OF THE MANHOLE RING AND COVER MUST BE AT LEAST 260 LBS.

SCHEDULE FOR REINFORCING STEEL

SHAPE	BAR	NO.	SIZE	SPACING	LENGTH	WEIGHT
STRAIGHT	A	21	4	9" O.C.	7'– 1"	99
┌	B	46	5	8" O.C.	8'– 6"	408
└	C	46	5	8" O.C.	5'– 3"	252
STRAIGHT	D	21	4	9" O.C.	7'– 1"	99
STRAIGHT	E	28	3	12" O.C.	5'– 11"	62
STRAIGHT	G	20	4	12" O.C.	7'– 1"	95
STRAIGHT	G_1	8	4	AS SHOWN	6'– 1"	33
STRAIGHT	H	27	3	12" O.C.	7'– 1"	72
STRAIGHT	J	8	6	3 1/2" O.C.	4'– 11"	59
					TOTAL	1,179 LBS.

CLASS "A" CONCRETE – 6.94 CU. YDS.
(DOES NOT EXCLUDE MANHOLE OPENINGS OR PIPE OPENING)

* NOTE: BAR SIZE AND SPACING BASED ON SPANS AS SHOWN – ANY REVISIONS TO THESE SPANS SHALL INCLUDE A RE–DESIGN ON STEEL REQ'D.

1. CONCRETE FOR STRUCTURE SHALL BE CLASS "A" 3,000 P.S.I. AT 28 DAYS.
2. ALL EXPOSED EDGES SHALL BE CHAMFERED 3/4".
3. REINFORCING STEEL SHALL BE NEW BILLET STEEL, INTERMEDIATE GRADE, ASTM A–15. THE DEFORMATION SHALL CONFORM TO ASTM A–305.
4. ALL DIMENSIONS RELATING TO REINFORCING STEEL ARE TO CENTER OF BARS.
5. ALL BARS INTERCEPTING MANHOLE OPENING AND REINFORCED CONCRETE PIPE SHALL BE FIELD–CUT.
6. WHERE LAPPING OF BARS IS REQUIRED, A MINIMUM LAP OF 33 DIAMETERS SHALL BE USED.
7. INVERT OF JUNCTION BOX TO BE SHAPED WITH CONCRETE FILL (2,500 P.S.I. MIN.) TO EFFECT DRAINAGE TO OUTLET PIPE. COST SUBSIDIARY TO CLASS "A" CONCRETE (JUNCTION BOXES).
8. PAYMENT FOR ALL EXCAVATION, BACKFILLING, CONCRETE, REINFORCING STEEL, VERTICAL STACK, RING AND COVER SHALL BE INCLUDED IN THE UNIT COST OF ITEM 403 – "STORM SEWER JUNCTION BOXES AND INLETS".

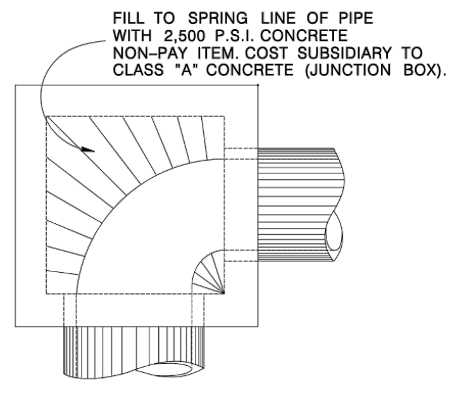
FILL TO SPRING LINE OF PIPE WITH 2,500 P.S.I. CONCRETE NON–PAY ITEM. COST SUBSIDIARY TO CLASS "A" CONCRETE (JUNCTION BOX).

CURVED DEFLECTOR DETAIL

JANUARY 2005

CITY OF SAN ANTONIO
CAPITAL IMPROVEMENTS MANAGEMENT SERVICES DEPARTMENT

6'x6'x6' JUNCTION BOX
STANDARDS

____% SUBMITTAL	PROJECT NO.:____		DATE:____
DRWN. BY:____	DSGN. BY:____	CHKD. BY:____	SHEET NO.:____OF____

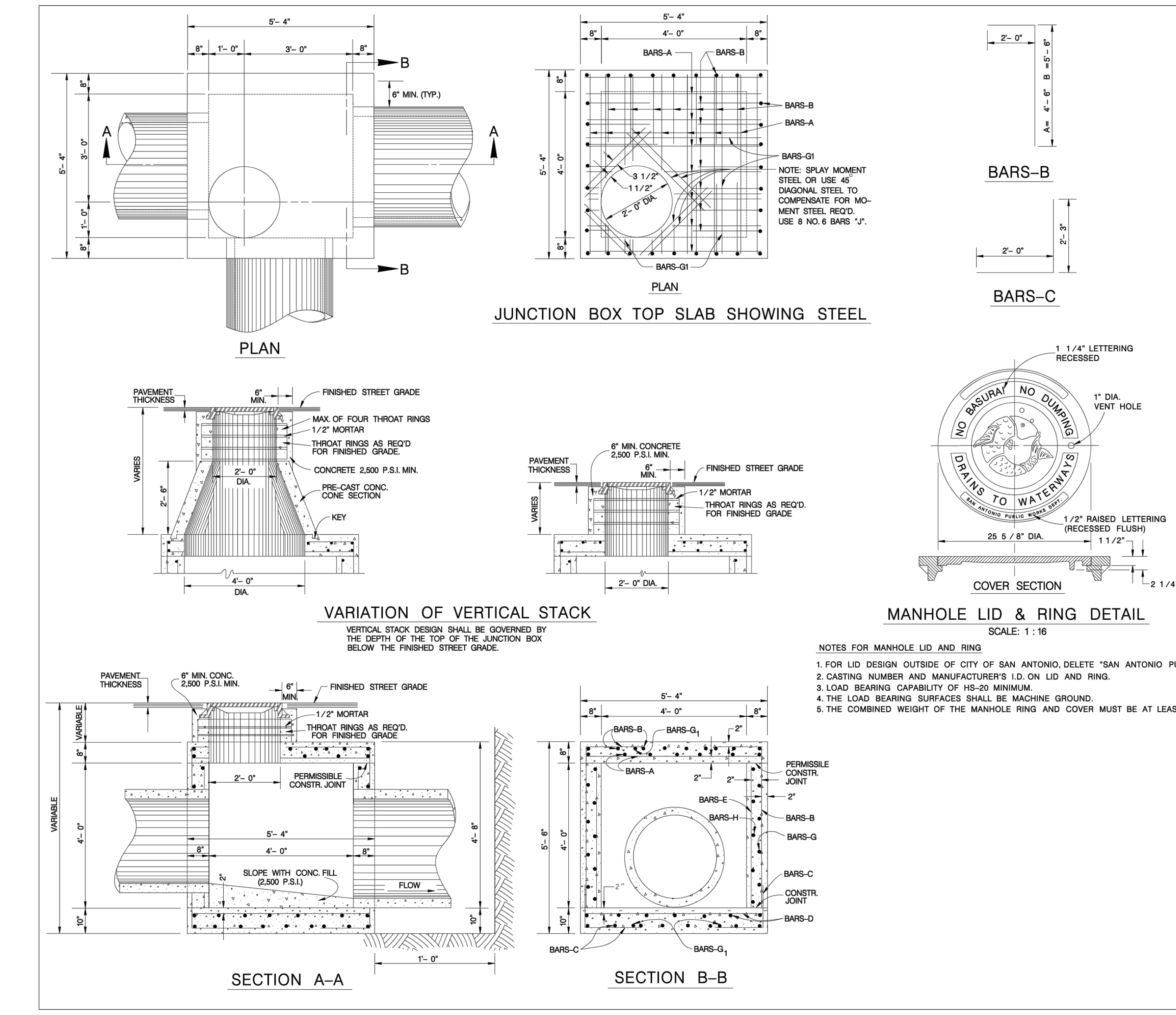
5'- 4"
B
A
6" MIN. (TYP.)
NOTE: SPLAY MOMENT STEEL OR USE 45° DIAGONAL STEEL TO COMPENSATE FOR MOMENT STEEL REQ'D. USE 8 NO. 6 BARS "J".
3 1/2"
BARS-B
BARS-A
BARS-G₁
2'- 0"
PAVEMENT THICKNESS
FINISHED STREET GRADE
MAX OF FOUR THROAT RINGS
1/2" MORTAR
THROAT RINGS AS REQ'D FOR FINISHED GRADE.
CONCRETE 2,500 P.S.I. MIN.
PRE-CAST CONC. CONE SECTION
KEY
VARIES
6" MIN. CONCRETE 2,500 P.S.I. MIN.
PERMISSIBLE CONSTR. JOINT
SLOPE WITH CONC. FILL (2,500 P.S.I.)
FLOW
VARIABLE
PERMISSILE CONSTR. JOINT
2"
BARS-H
BARS-B
BARS-G
BARS-C
CONSTR. JOINT
BARS-D
1 1/4" LETTERING RECESSED
1" DIA. VENT HOLE
NO BASURA
NO DUMPING
DRAINS TO WATERWAYS
SAN ANTONIO PUBLIC WORKS DEPT.
1/2" RAISED LETTERING (RECESSED FLUSH)
25 5/8" DIA.
1 1/2"
2 1/4"

PLAN

JUNCTION BOX TOP SLAB SHOWING STEEL

BARS–B

BARS–C

VARIATION OF VERTICAL STACK

VERTICAL STACK DESIGN SHALL BE GOVERNED BY THE DEPTH OF THE TOP OF THE JUNCTION BOX BELOW THE FINISHED STREET GRADE.

COVER SECTION

MANHOLE LID & RING DETAIL

SCALE: 1 : 16

NOTES FOR MANHOLE LID AND RING

1. FOR LID DESIGN OUTSIDE OF CITY OF SAN ANTONIO, DELETE "SAN ANTONIO PUBLIC WORKS DEPT.".
2. CASTING NUMBER AND MANUFACTURER'S I.D. ON LID AND RING.
3. LOAD BEARING CAPABILITY OF HS–20 MINIMUM.
4. THE LOAD BEARING SURFACES SHALL BE MACHINE GROUND.
5. THE COMBINED WEIGHT OF THE MANHOLE RING AND COVER MUST BE AT LEAST 260 LBS.

SECTION A–A

SECTION B–B

SCHEDULE FOR REINFORCING STEEL

A = 4' X 4' X 4' J.B. NO. 1 & 4

SHAPE	BAR	NO.	SIZE	SPACING	LENGTH	WEIGHT
STRAIGHT	A	16	4	9" O.C.	5'– 1"	54
┌	B	32	5	8" O.C.	6'– 10"	228
└	C	32	5	8" O.C.	4'– 3"	142
STRAIGHT	D	16	4	9" O.C.	5'– 1"	54
STRAIGHT	E	16	3	12" O.C.	3'–11"	24
STRAIGHT	G	16	4	12" O.C.	5'–1"	54
STRAIGHT	G_1	8	4	AS SHOWN	5'–1"	27
STRAIGHT	H	20	3	12" O.C.	4'–5"	33
STRAIGHT	J	8	6	3 1/2"	2'– 10"	34
					TOTAL	650 LBS.

CLASS "A" CONCRETE– 3.43 CU. YDS.
(DOES NOT EXCLUDE MANHOLE OPENINGS OR PIPE OPENING)

* NOTE: BAR SIZE AND SPACING BASED ON SPANS AS SHOWN – ANY REVISIONS TO THESE SPANS SHALL INCLUDE A RE–DESIGN ON STEEL REQD.

1. CONCRETE FOR STRUCTURE SHALL BE CLASS "A," 3,000 P.S.I. AT 28 DAYS.
2. ALL EXPOSED EDGES SHALL BE CHAMFERED 3/4".
3. REINFORCING STEEL SHALL BE NEW BILLET STEEL, INTERMEDIATE GRADE, ASTM. A–15. THE DEFORMATION SHALL CONFORM TO ASTM. A–305.
4. ALL DIMENSIONS RELATING TO REINFORCING STEEL ARE TO CENTER OF BARS.
5. ALL BARS INTERCEPTING MANHOLE OPENING AND REINFORCED CONCRETE PIPE SHALL BE FIELD–CUT.
6. WHERE LAPPING OF BARS IS REQUIRED, A MINIMUM LAP OF 33 DIAMETERS SHALL BE USED.
7. INVERT OF JUNCTION BOX TO BE SHAPED WITH CONCRETE FILL (2,500 P.S.I. MIN.) TO EFFECT DRAINAGE TO OUTLET PIPE. COST SUBSIDIARY TO CLASS "A" CONCRETE (JUNCTION BOXES).
8. PAYMENT FOR ALL EXCAVATION, BACKFILLING, CONCRETE, REINFORCING STEEL, VERTICAL STACK, RING AND COVER SHALL BE INCLUDED IN THE UNIT COST OF ITEM 403 – "STORM SEWER JUNCTION BOXES AND INLETS".

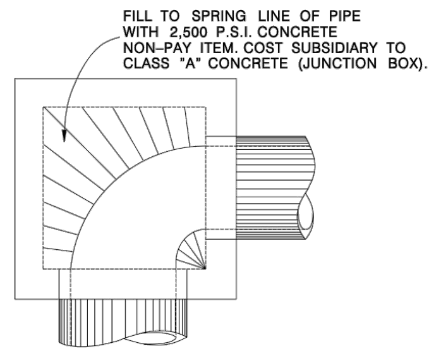
FILL TO SPRING LINE OF PIPE WITH 2,500 P.S.I. CONCRETE NON–PAY ITEM. COST SUBSIDIARY TO CLASS "A" CONCRETE (JUNCTION BOX).

CURVED DEFLECTOR DETAIL

JANUARY 2005

CITY OF SAN ANTONIO
CAPITAL IMPROVEMENTS MANAGEMENT SERVICES DEPARTMENT

4'x4'x4' JUNCTION BOX
STANDARDS

____% SUBMITTAL	PROJECT NO.:____		DATE:____
DRWN. BY:____	DSGN. BY:____	CHKD. BY:____	SHEET NO.:____OF____

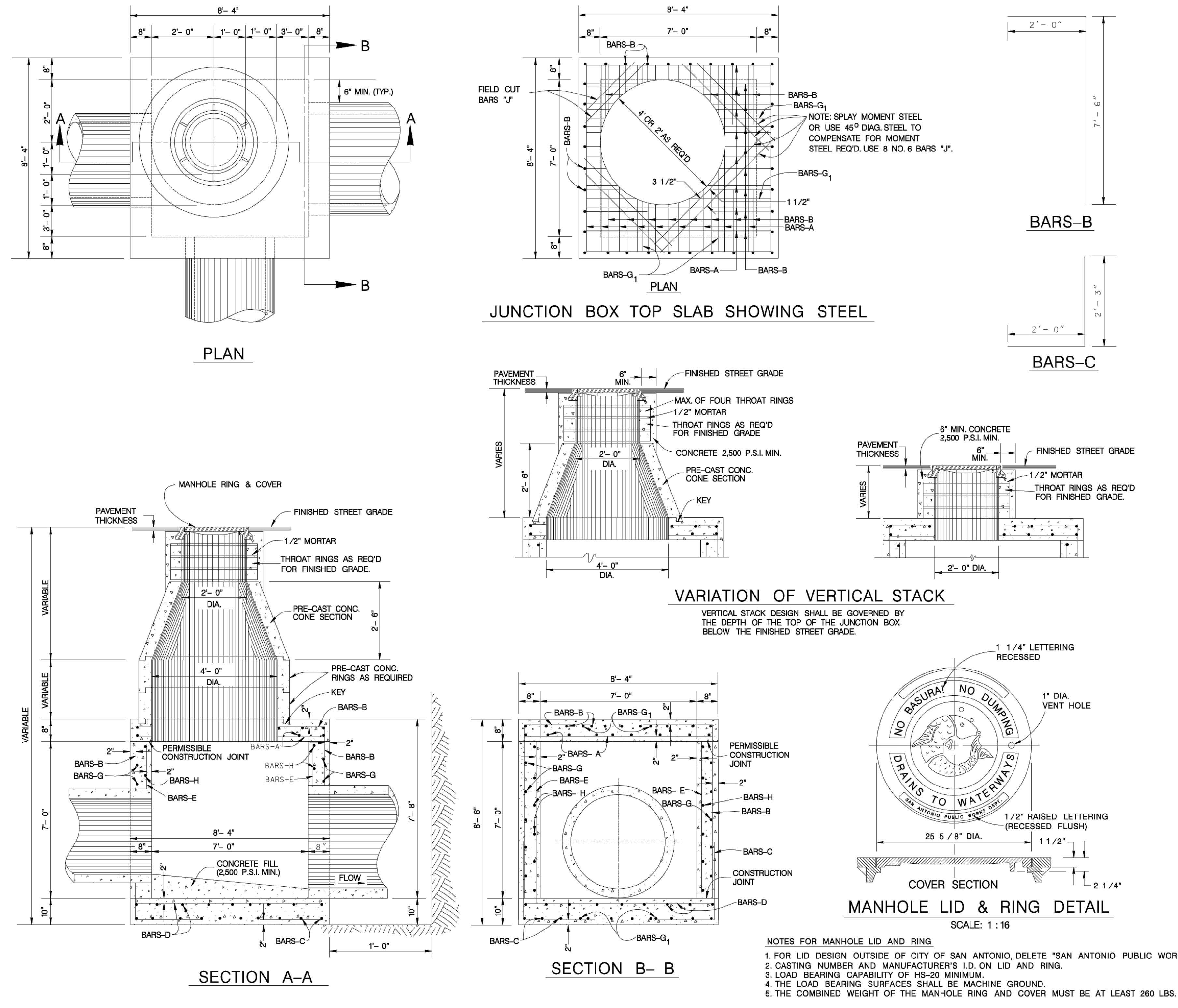
8'- 4"
B
A
6" MIN. (TYP.)
FIELD CUT BARS "J"
NOTE: SPLAY MOMENT STEEL OR USE 45° DIAG. STEEL TO COMPENSATE FOR MOMENT STEEL REQ'D. USE 8 NO. 6 BARS "J".
4'-0" Z AS REQ'D
3 1/2"
BARS-B
BARS-G₁
BARS-A
2'- 0"
7'- 6"
3'- 9"
PAVEMENT THICKNESS
FINISHED STREET GRADE
MAX OF FOUR THROAT RINGS
1/2" MORTAR
THROAT RINGS AS REQ'D FOR FINISHED GRADE.
CONCRETE 2,500 P.S.I. MIN.
PRE-CAST CONC. CONE SECTION
KEY
6" MIN. CONCRETE 2,500 P.S.I. MIN.
VARIES
MANHOLE RING & COVER
PRE-CAST CONC. RINGS AS REQUIRED
PERMISSIBLE CONSTRUCTION JOINT
CONCRETE FILL (2,500 P.S.I. MIN.)
FLOW
VARIABLE
BARS-B
BARS-G
BARS-H
BARS-E
BARS-C
BARS-D
CONSTRUCTION JOINT
1 1/4" LETTERING RECESSED
1" DIA. VENT HOLE
NO BASURA
NO DUMPING
DRAINS TO WATERWAYS
SAN ANTONIO PUBLIC WORKS DEPT.
1/2" RAISED LETTERING (RECESSED FLUSH)
25 5/8" DIA.
1 1/2"
2 1/4"

PLAN

JUNCTION BOX TOP SLAB SHOWING STEEL

BARS–B

BARS–C

VARIATION OF VERTICAL STACK

VERTICAL STACK DESIGN SHALL BE GOVERNED BY THE DEPTH OF THE TOP OF THE JUNCTION BOX BELOW THE FINISHED STREET GRADE.

SECTION A–A

SECTION B– B

COVER SECTION

MANHOLE LID & RING DETAIL

SCALE: 1 : 16

NOTES FOR MANHOLE LID AND RING

1. FOR LID DESIGN OUTSIDE OF CITY OF SAN ANTONIO, DELETE "SAN ANTONIO PUBLIC WORKS DEPT.".
2. CASTING NUMBER AND MANUFACTURER'S I.D. ON LID AND RING.
3. LOAD BEARING CAPABILITY OF HS–20 MINIMUM.
4. THE LOAD BEARING SURFACES SHALL BE MACHINE GROUND.
5. THE COMBINED WEIGHT OF THE MANHOLE RING AND COVER MUST BE AT LEAST 260 LBS.

SCHEDULE FOR REINFORCING STEEL

SHAPE	BAR	NO.	SIZE	SPACING	LENGTH	WEIGHT
STRAIGHT	A	24	4	9" O.C.	8'– 1"	130
┌	B	48	5	8" O.C.	9'– 6"	476
└	C	48	5	8" O.C.	4'– 3"	213
STRAIGHT	D	24	4	9" O.C.	8'– 1"	130
STRAIGHT	E	28	3	12" O.C.	6'– 11"	73
STRAIGHT	G	28	4	12" O.C.	8'– 6"	151
STRAIGHT	G_1	8	4	AS SHOWN	8'– 1"	43
STRAIGHT	H	32	3	12" O.C.	7'– 5"	89
STRAIGHT	J	8	6	3 1/2" O.C.	4'– 11"	59
					TOTAL	1,364 LBS.

CLASS "A" CONCRETE – 9.16 C.U. YDS.
(DOES NOT EXCLUDE MANHOLE OPENINGS OR PIPE OPENING)

* NOTE: BAR SIZE AND SPACING BASED ON SPANS AS SHOWN – ANY REVISIONS TO THESE SPANS SHALL INCLUDE A RE–DESIGN ON STEEL REQD.

1. CONCRETE FOR STRUCTURE SHALL BE CLASS "A" 3,000 P.S.I. AT 28 DAYS.
2. ALL EXPOSED EDGES SHALL BE CHAMFERED 3⁄4".
3. REINFORCING STEEL SHALL BE NEW BILLET STEEL, INTERMEDIATE GRADE, ASTM A–15. THE DEFORMATION SHALL CONFORM TO ASTM A–305.
4. ALL DIMENSIONS RELATING TO REINFORCING STEEL ARE TO CENTER OF BARS.
5. ALL BARS INTERCEPTING MANHOLE OPENING AND REINFORCED CONCRETE PIPE SHALL BE FIELD–CUT.
6. WHERE LAPPING OF BARS IS REQUIRED, A MINIMUM LAP OF 33 DIAMETERS SHALL BE USED.
7. INVERT OF JUNCTION BOX TO BE SHAPED WITH CONCRETE FILL (2,500 P.S.I. MIN.) TO EFFECT DRAINAGE TO OUTLET PIPE. COST SUBSIDIARY TO CLASS "A" CONCRETE (JUNCTION BOXES).
8. PAYMENT FOR ALL EXCAVATION, BACKFILLING, CONCRETE, REINFORCING STEEL, VERTICAL STACK, RING AND COVER SHALL BE INCLUDED IN THE UNIT COST OF ITEM 403 – "STORM SEWER JUNCTION BOXES AND INLETS".

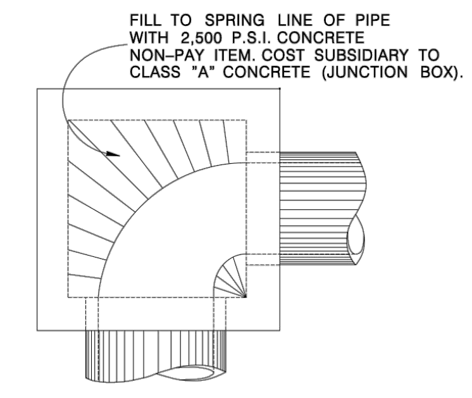
FILL TO SPRING LINE OF PIPE WITH 2,500 P.S.I. CONCRETE NON–PAY ITEM. COST SUBSIDIARY TO CLASS "A" CONCRETE (JUNCTION BOX).

CURVED DEFLECTOR DETAIL

JANUARY 2005

CITY OF SAN ANTONIO
CAPITAL IMPROVEMENTS MANAGEMENT SERVICES DEPARTMENT

7'x7'x7' JUNCTION BOX
STANDARDS

____% SUBMITTAL	PROJECT NO.:____		DATE:____
DRWN. BY:____	DSGN. BY:____	CHKD. BY:____	SHEET NO.:____OF____

DISCLAIMER:
The use of this standard is governed by the "Texas Engineering Practice Act". No warranty of any kind is made by TxDOT for any purpose whatsoever. TxDOT assumes no responsibility for the conversion of this standard to other formats or for incorrect results or damages resulting from its use.

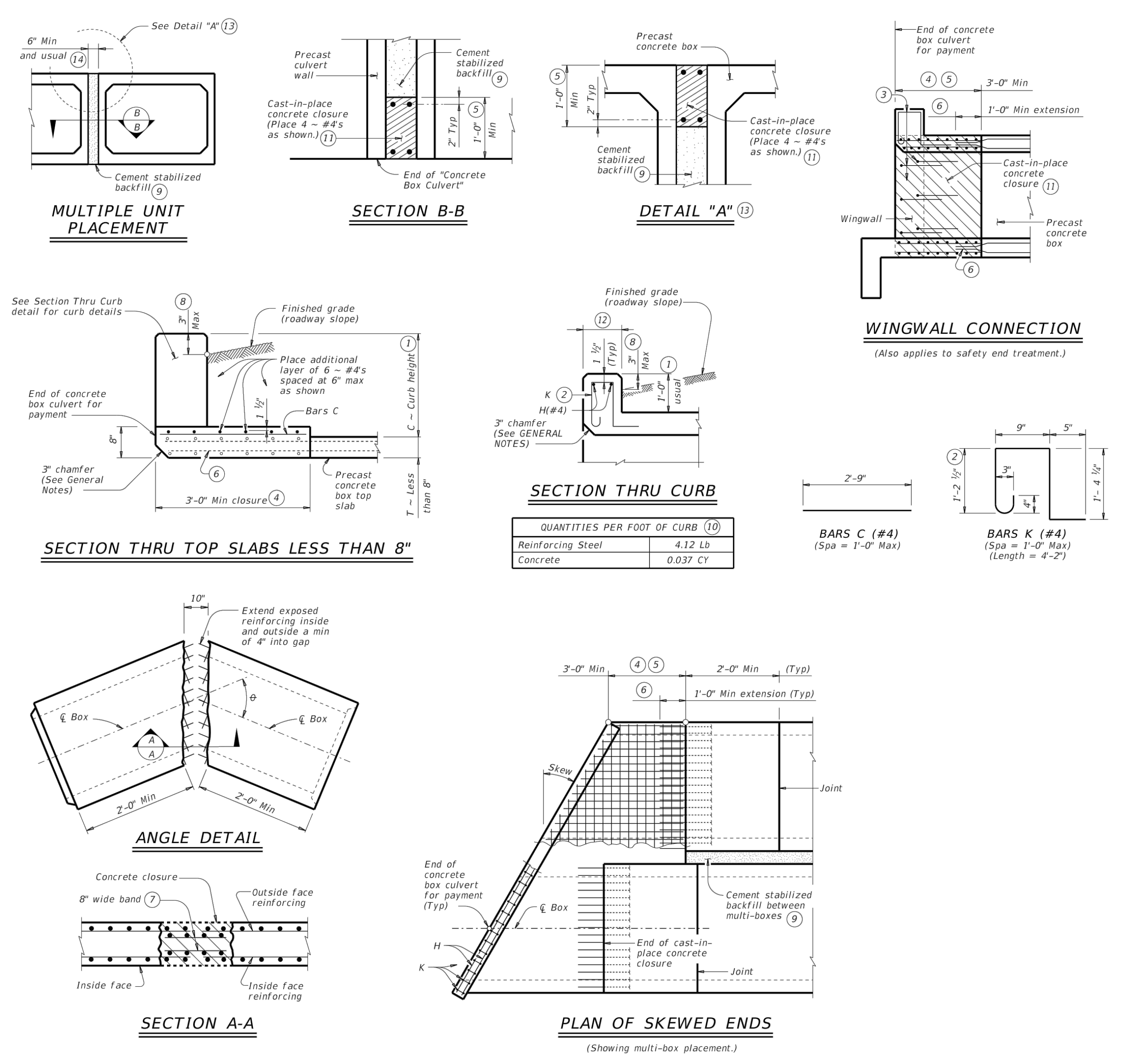
See Detail "A" ⑬
6" Min and usual ⑭
B
Cement stabilized backfill ⑨
Precast culvert wall
Cast-in-place concrete closure (Place 4 ~ #4's as shown.) ⑪
End of "Concrete Box Culvert"
2" Typ
1'-0" Min
Precast concrete box
Cement stabilized backfill ⑨
End of concrete box culvert for payment
④ ⑤ 3'-0" Min
⑥ 1'-0" Min extension
Wingwall
Cast-in-place concrete closure ⑪
Precast concrete box
See Section Thru Curb detail for curb details
⑧ 3" Max
Finished grade (roadway slope)
Place additional layer of 6 ~ #4's spaced at 6" max as shown
Bars C
End of concrete box culvert for payment
3" chamfer (See General Notes)
3'-0" Min closure ④
Precast concrete box top slab
C ~ Curb height
T ~ Less than 8"
⑫ 1 ½" (Typ)
K ②
H(#4)
1'-0" usual
3" chamfer (See GENERAL NOTES)
2'-9"
9"
5"
3"
4"
1'-2 ½"
1'- 4 ¼"
10"
Extend exposed reinforcing inside and outside a min of 4" into gap
℄ Box
θ
2'-0" Min
Concrete closure
8" wide band ⑦
Outside face reinforcing
Inside face
Inside face reinforcing
2'-0" Min (Typ)
Skew
Joint
End of concrete box culvert for payment (Typ)
H
K
Cement stabilized backfill between multi-boxes ⑨
End of cast-in-place concrete closure

MULTIPLE UNIT PLACEMENT

SECTION B-B

DETAIL "A" ⑬

WINGWALL CONNECTION

(Also applies to safety end treatment.)

SECTION THRU TOP SLABS LESS THAN 8"

SECTION THRU CURB

QUANTITIES PER FOOT OF CURB ⑩	
Reinforcing Steel	4.12 Lb
Concrete	0.037 CY

BARS C (#4)
(Spa = 1'-0" Max)

BARS K (#4)
(Spa = 1'-0" Max)
(Length = 4'-2")

ANGLE DETAIL

SECTION A-A

PLAN OF SKEWED ENDS

(Showing multi-box placement.)

① 0" Min to 5'-0" Max. Estimated curb heights are shown elsewhere in the plans. For structures with pedestrian rail, bicycle rail, or curbs taller than 1'-0, refer to the Extended Curb Details (ECD) standard sheet. For structures with T631 or T631LS bridge rail, refer to the Mounting Details for T631 & T631LS Rails (T631-CM) standard sheet. Refer to the Box Culvert Rail Mounting Details (RAC) standard sheet for structures with bridge rail other than T631 or T631LS.

② For curbs less than 1'-0" high, tilt Bars K or reduce bar height as necessary to maintain cover. For curbs less than 3" high, Bars K may be omitted.

③ Extend curb, wingwall, or safety end treatment reinforcing into concrete closure. Bend or trim, as necessary, any reinforcing that does not fit into closure area.

④ Provide a 3'-0" Min cast-in-place concrete closure. Break back boxes in the field or cast boxes short. Provide bands of reinforcing in the closure that are the same size and spacing as in the precast box section. Provide #4 longitudinal reinforcement spaced at 12 inches Max within the closure. Except where shown otherwise, construct the cast-in-place closure flush with the inside and outside faces of the precast box section.

⑤ For multiple unit placements, adjust the length of the closure for the interior walls as necessary. Provide a 3'-0" Min cast-in-place closure in the top slab, bottom slab, and exterior wall. See Section B-B detail when interior walls are cast full length.

⑥ Extend precast box reinforcing a minimum of 1'-0" into concrete closure (Typ).

⑦ Place bands of reinforcing matching the inside and outside face reinforcing in the gaps of the top and bottom slabs. Place a band matching the outside face reinforcing of the wall in the gaps of the walls (placed in the outside face only). Tack weld the bands to the exposed reinforcing at each point of contact.

⑧ For vehicle safety, the following requirements must be met:
- For structures without bridge rail, construct curbs no more than 3" above finished grade.
- For structures with bridge rail, construct curbs flush with finished grade.

Reduce curb heights, if necessary, to meet the above requirements. No changes will be made in quantities and no additional compensation will be allowed for this work.

⑨ Cement stabilized backfill between boxes is considered part of the box culvert for payment.

⑩ All curb concrete and reinforcing is considered part of the box culvert for payment.

⑪ Any additional concrete and reinforcing required for the closures will be considered subsidiary to the box culvert for payment.

⑫ 1'-0" typical. 2'-3" when the Box Culvert Rail Mounting Details (RAC) standard sheet is referred to elsewhere in the plans.

⑬ For multiple unit placement with overlay, with 1 to 2 course surface treatment, or with the top slab as the final riding surface, provide wall closure as shown in Detail "A".

⑭ This dimension may be increased with approval of the Engineer to allow the precast boxes to be tunneled or jacked in accordance with Item 476, "Jacking, Boring, or Tunneling Pipe or Box." No payment will be made for any additional material in the gap between adjacent boxes.

MATERIAL NOTES:
Provide Grade 60 reinforcing steel.
Provide ASTM A1064 welded wire reinforcement.
Provide Class C concrete (f'c = 3,600 psi) for the closures.
Provide cement stabilized backfill meeting the requirements of Item 400, "Excavation and Backfill for Structures."
Any additional concrete required for the closures will be considered subsidiary to the box culvert.

GENERAL NOTES:
Designed according to AASHTO LRFD Bridge Design Specifications.
Refer to the Single Box Culverts Precast (SCP) standard sheets for details and notes not shown.
Chamfer the bottom edge of the top slab closure 3 inches at culvert closure ends.

Cover dimensions are clear dimensions, unless noted otherwise.
Reinforcing bars dimensions are out-to-out of bars.

HL93 LOADING

Texas Department of Transportation
Bridge Division Standard

BOX CULVERTS
PRECAST
MISCELLANEOUS DETAILS

SCP-MD

FILE: CD-SCP-MD-20.dgn	DN: GAF	CK: LMW	DW: BWH/TxDOT	CK: GAF
©TxDOT February 2020	CONT	SECT	JOB	HIGHWAY
REVISIONS				
	DIST	COUNTY		SHEET NO.

DATE:
FILE:

NO.	REVISION	DATE

CALEB M. CHANCE
98401
Caleb Chance 5/29/25

PAPE-DAWSON ENGINEERS
2000 NW LOOP 410 I SAN ANTONIO, TX 78213 I 210.375.9000
TEXAS ENGINEERING FIRM #470 I TEXAS SURVEYING FIRM #10028800

STONEHILL UNITS 2B & 6A
SAN ANTONIO, TEXAS

DRAINAGE DETAILS

PLAT NO. 24-11800312
JOB NO. 12456–13
DATE JULY 2024
DESIGNER RA
CHECKED BL DRAWN JM
SHEET C1.11

Date: May 30, 2025, 8:59am User ID: ralvarez
File: P:\124\56\13\Design\Civil\SDDT-1245613.dwg

DISCLAIMER: The use of this standard is governed by the "Texas Engineering Practice Act". No warranty of any kind is made by TxDOT for any purpose whatsoever. TxDOT assumes no responsibility for the conversion of this standard to other formats or for incorrect results or damages resulting from its use.

TABLE OF DIMENSIONS AND REINFORCING STEEL
(Wings for one structure end)

Dimensions					Variable Reinforcing				Estimated Quantities per ft of wing (2~wings) ④		Estimated Quantities per ft of Toewall (1~toewall)	
Maximum Wingwall Height Hw	W	X	Y	Z	Bars J1 Size	Bars J1 Spa	Bars J2 Size	Bars J2 Spa	Reinf Lb/Ft)	Conc (CY/Ft)	Reinf (Lb/Ft)	Conc (CY/Ft)
2'-6"	2'-10"	10"	1'-0"	7"	#4	1'-0"	#4	1'-0"	48.64	0.406	6.85	0.071
2'-9"	2'-10"	10"	1'-0"	7"	#4	1'-0"	#4	1'-0"	49.31	0.424	6.85	0.071
3'-0"	2'-10"	10"	1'-0"	7"	#4	1'-0"	#4	1'-0"	49.98	0.444	6.85	0.071
3'-3"	2'-10"	10"	1'-0"	7"	#4	1'-0"	#4	1'-0"	53.32	0.462	6.85	0.071
3'-6"	2'-10"	10"	1'-0"	7"	#4	1'-0"	#4	1'-0"	53.98	0.480	6.85	0.071
4'-0"	3'-2"	1'-2"	1'-0"	7"	#4	1'-0"	#4	1'-0"	55.77	0.532	6.85	0.071
4'-6"	3'-2"	1'-2"	1'-0"	7"	#4	1'-0"	#4	1'-0"	59.77	0.568	6.85	0.071
5'-0"	3'-9"	1'-7"	1'-2"	7"	#4	1'-0"	#4	1'-0"	63.45	0.632	6.96	0.075
5'-6"	3'-9"	1'-7"	1'-2"	7"	#4	1'-0"	#4	1'-0"	67.46	0.668	6.96	0.075
6'-0"	4'-4"	2'-0"	1'-4"	7"	#5	1'-0"	#5	1'-0"	80.67	0.730	7.07	0.078
6'-6"	4'-4"	2'-0"	1'-4"	7"	#5	1'-0"	#5	1'-0"	85.05	0.768	7.07	0.078
7'-0"	5'-0"	2'-3"	1'-9"	8"	#5	1'-0"	#5	1'-0"	92.15	0.864	8.07	0.093
7'-6"	5'-0"	2'-3"	1'-9"	8"	#5	1'-0"	#5	1'-0"	96.54	0.902	8.07	0.093
8'-0"	5'-6"	2'-8"	1'-10"	8"	#5	6"	#5	6"	139.04	0.962	8.13	0.095
8'-6"	5'-6"	2'-8"	1'-10"	8"	#5	6"	#5	6"	144.47	1.000	8.13	0.095
9'-6"	6'-0"	2'-10"	2'-2"	9"	#5	6"	#5	6"	156.93	1.136	8.41	0.110
10'-6"	6'-5"	3'-0"	2'-5"	9"	#6	6"	#5	6"	196.27	1.234	8.57	0.117
11'-6"	7'-2"	3'-6"	2'-8"	11"	#6	6"	#6	6"	230.13	1.438	9.52	0.140
12'-6"	7'-8"	3'-9"	2'-11"	1'-0"	#7	6"	#6	6"	283.41	1.592	9.74	0.157
13'-6"	8'-2"	4'-0"	3'-2"	1'-2"	#8	6"	#6	6"	348.72	1.804	10.02	0.186
14'-6"	8'-10"	4'-5"	3'-5"	1'-4"	#9	6"	#6	6"	432.94	2.046	10.30	0.218
15'-6"	9'-6"	4'-10"	3'-8"	1'-6"	#9	6"	#7	6"	489.52	2.302	11.24	0.253
16'-0"	9'-11"	5'-0"	3'-11"	1'-7"	#9	6"	#7	6"	505.72	2.448	11.47	0.279

TABLE OF WINGWALL REINFORCING
(2~wings)

Bar	Size	No.	Spa
D1	#6	~	1'-0"
D2	#6	~	1'-0"
E1	#4	~	1'-0"
F	#4	~	1'-0"
G	#6	~	8"
M1	#4	4	~
P	#4	~	1'-0"
V	#4	~	1'-0"

TABLE OF TOEWALL REINFORCING

Bar	Size	No.	Spa
J3	#4	~	1'-0"
M2	#4	2	~
E2	#4	~	1'-0"

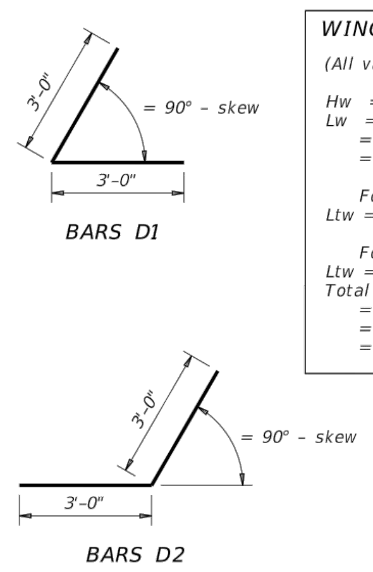

3'-0"
= 90° - skew
3'-0"
BARS D1
3'-0"
= 90° - skew
3'-0"
BARS D2

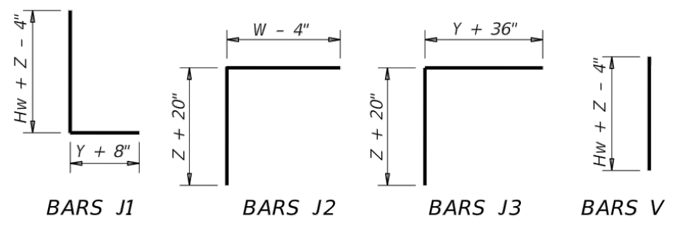

Hw + Z - 4"
Y + 8"
BARS J1
W - 4"
Z + 20"
BARS J2
Y + 36"
Z + 20"
BARS J3
Hw + Z - 4"
BARS V

WING DIMENSION FORMULAS:

(All values are in feet.)

$Hw = H + T + C$

$Lw = (Hw)(SL) \div \text{cosine}(\theta)$ for Type PW-1
$= (Hw - 1')(SL) \div \text{cosine}(\theta)$ for Type PW-2 and $Hw \geq 4'$
$= (Hw - 0.5')(SL) \div \text{cosine}(\theta)$ for Type PW-2 and $Hw < 4'$

For cast-in-place culverts:
$Ltw = [(N)(S) + (N + 1)(U)] \div \text{cosine}(\theta)$

For precast culverts:
$Ltw = [(N)(2U + S) + (N - 1)(0.5')] \div \text{cosine}(\theta)$
Total Wingwall Area (two wings ~ SF)
$= (2)(Hw)(Lw)$ for Type PW-1
$= (2)(Hw)(Lw) - 6$ SF for Type PW-2 and $Hw \geq 4'$
$= (2)(Hw)(Lw) - 1.5$ SF for Type PW-2 and $Hw < 4'$

Hw = Height of wingwall
Lw = Length of wingwall
Ltw = Culvert toewall length
N = Number of culvert spans
SL:1 = Channel slope ratio. (horizontal: 1 vertical, usual value is 2:1)
θ = Culvert skew

See applicable box culvert standard sheet for S, H, T, and U values.

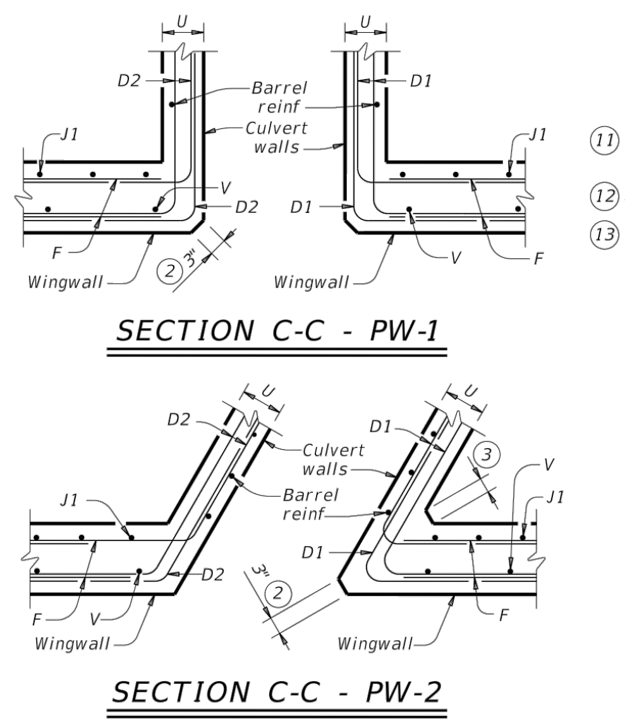

U
D2
Barrel reinf
Culvert walls
J1
D1
F
V
Wingwall
SECTION C-C - PW-1
Culvert walls
Barrel reinf
E1
J1
D2
D1
SECTION C-C - PW-2

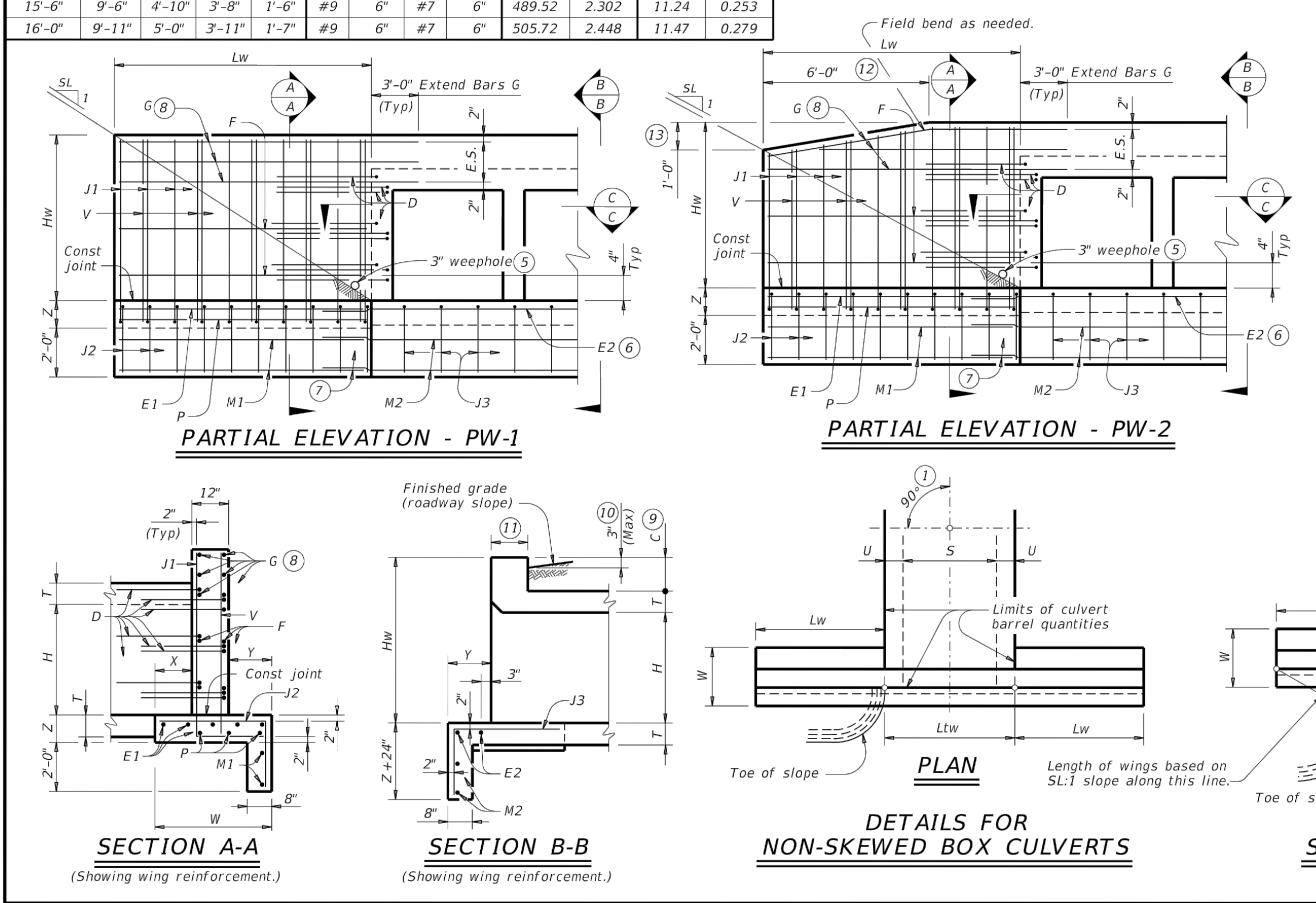

Lw
SL 1
G 8
F
A A
3'-0" Extend Bars G (Typ)
B B
J1
V
D
Hw
Const joint
3" weephole 5
E.S.
C C
E2 6
E1
P
M1
7
M2
J3
J2
PARTIAL ELEVATION - PW-1
6'-0" 12
13
1'-0"
3'-0" Extend Bars G (Typ)
Field bend as needed.
PARTIAL ELEVATION - PW-2
12"
2" (Typ)
Const joint
SECTION A-A
(Showing wing reinforcement.)
Finished grade (roadway slope)
11
10
9
SECTION B-B
(Showing wing reinforcement.)
Lw
Limits of culvert barrel quantities
Ltw
Toe of slope
Length of wings based on SL:1 slope along this line.
PLAN
DETAILS FOR NON-SKEWED BOX CULVERTS

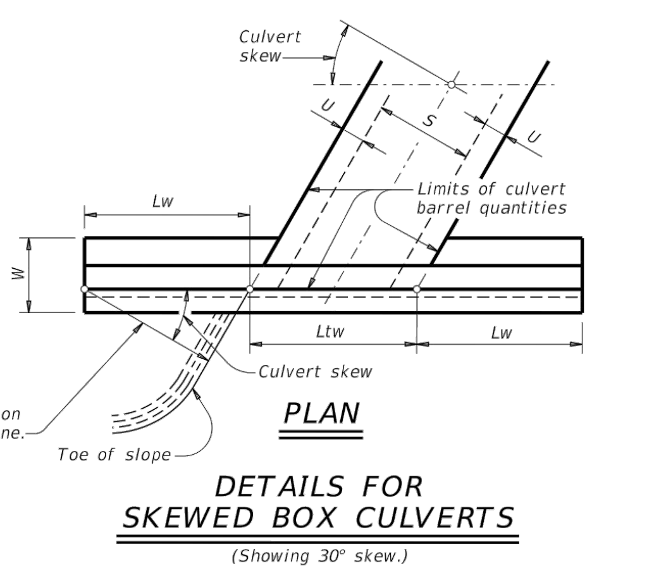

Culvert skew
Limits of culvert barrel quantities
Ltw
Lw
Culvert skew
Toe of slope
PLAN
DETAILS FOR SKEWED BOX CULVERTS
(Showing 30° skew.)

① Skew = 0°

② At discharge end, chamfer may be ¾" minimum.

③ For 15° skew ~ 1"
For 30° skew ~ 2"
For 45° skew ~ 3"

④ Quantities shown are for two Type PW-1 wings. Adjust concrete volume for Type PW-2 wings. To determine estimated quantities for two wings, multiply the tabulated values by Lw. Quantities shown do not include weight of Bars D.

⑤ Provide weepholes for Hw = 5'-0" and greater. Fill around weepholes with coarse gravel.

⑥ Extend Bars E2 1'-6" minimum into the wingwall footing.

⑦ Lap Bars M1 1'-6" minimum with Bars M2.

⑧ Place Bars G as shown, equally spaced at 8" maximum. Provide at least two pairs of Bars G per wing.

⑨ 0" Min to 5'-0" Max. Estimated curb heights are shown elsewhere in the plans. For structures with pedestrian rail or curbs taller than 1'-0, refer to the Extended Curb Details (ECD) standard sheet. For structures with T631 or T631LS bridge rail, refer to the Mounting Details for T631 & T631LS Rails (T631-CM) standard sheet. Refer to the Box Culvert Rail Mounting Details (RAC) standard sheet for structures with bridge rail other than T631 or T631LS.

⑩ For vehicle safety, the following requirements must be met:
- For structures without bridge rail, construct curbs no more than 3" above finished grade.
- For structures with bridge rail, construct curbs flush with finished grade.

Reduce curb heights, if necessary, to meet the above requirements. No changes will be made in quantities and no additional compensation will be allowed for this work.

⑪ 1'-0" typical. 2'-3" when the Box Culvert Rail Mounting Details (RAC) standard sheet is referred to elsewhere in the plans.

⑫ 3'-0" for Hw < 4'.

⑬ 6" for Hw < 4'.

DESIGNER NOTES:
Type PW-1 can be used for all applications and must be used if railing is to be mounted to the wingwall.
Type PW-2 can only be used for applications without a railing mounted to the wingwall.

MATERIAL NOTES:
Provide Class C concrete (f'c=3,600 psi).
Provide Grade 60 reinforcing steel.
Provide galvanized reinforcing steel if required elsewhere in the plans.

GENERAL NOTES:
Designed in accordance with AASHTO LRFD Bridge Design Specifications.
Depth of toewalls for wingwalls and culverts may be reduced or eliminated when founded on solid rock, when directed by the Engineer.
See Box Culvert Supplement (BCS) standard sheet for wingwall type and additional dimensions and information.
Quantities for concrete and reinforcing steel resulting from the formulas given on this sheet are for the Contractor's information only.

Cover dimensions are clear dimensions, unless noted otherwise.
Reinforcing dimensions are out-to-out of bars.

Texas Department of Transportation
Bridge Division Standard

CONCRETE WINGWALLS
WITH PARALLEL WINGS FOR
BOX CULVERTS
TYPES PW-1 AND PW-2

PW

FILE: CD-PW-20.dgn	DN: GAF	CK: CAT	DW: TxDOT	CK: TxDOT
©TxDOT February 2020	CONT	SECT	JOB	HIGHWAY
REVISIONS				
	DIST	COUNTY		SHEET NO.

DATE:
FILE:

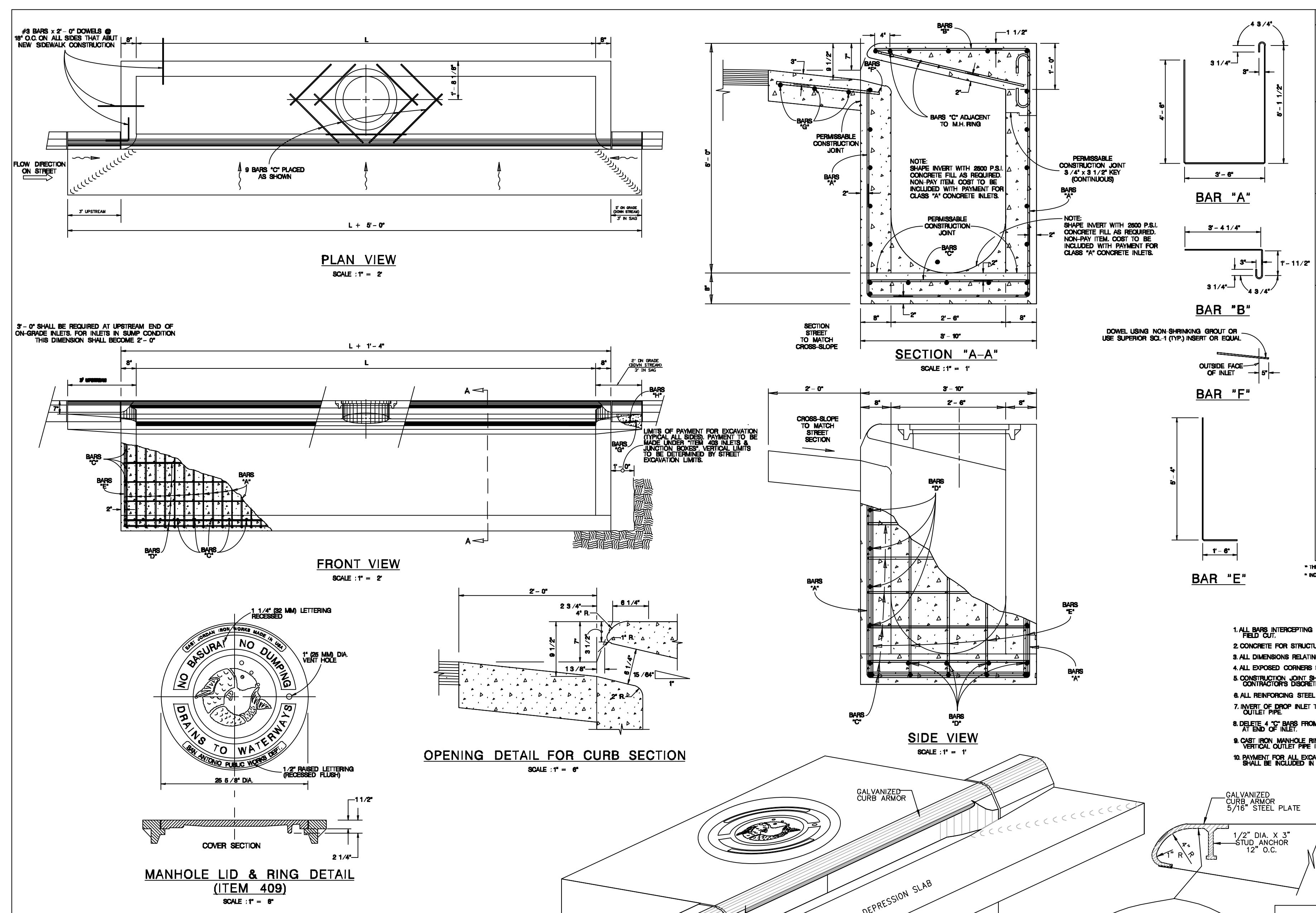

PLAN VIEW
SCALE : 1" = 3'
FRONT VIEW
SECTION "A-A"
SCALE : 1" = 1'
SIDE VIEW
BAR "A"
BAR "B"
BAR "F"
BAR "E"
COVER SECTION
25 5/8" DIA.
1/2" RAISED LETTERING (RECESSED FLUSH)
1 1/2"
2 1/4"
MANHOLE LID & RING DETAIL
(ITEM 409)
SCALE : 1" = 6"
OPENING DETAIL FOR CURB SECTION
SCALE : 1" = 6"
NO DUMPING DRAINS TO WATERWAY
SAN ANTONIO PUBLIC WORKS DEPT.

NOTES FOR MANHOLE LID AND RING

1. FOR LID DESIGN OUTSIDE OF CITY OF SAN ANTONIO, DELETE "SAN ANTONIO PUBLIC WORKS DEPT.".
2. CASTING NUMBER AND MANUFACTURER'S I.D. ON LID AND RING.
3. LOAD BEARING CAPABILITY OF H 5-20 MINIMUM.
4. THE LOAD BEARING SURFACES SHALL BE MACHINE GROUND.
5. THE COMBINED WEIGHT OF THE MANHOLE RING AND COVER MUST BE AT LEAST 260 LBS.

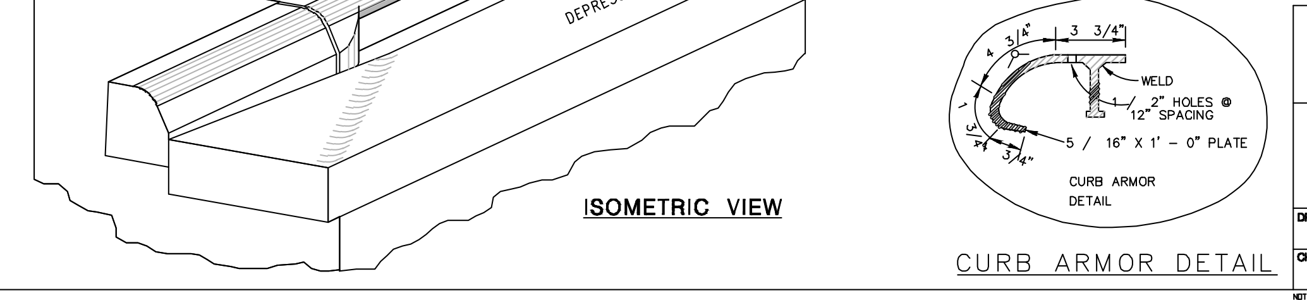

DEPRESSION SLAB
GALVANIZED CURB ARMOR
ISOMETRIC VIEW
3 3/4"
WELD
1/2" HOLES @ 12" SPACING
5/16" X 1'-0" PLATE
CURB ARMOR DETAIL
CURB ARMOR DETAIL

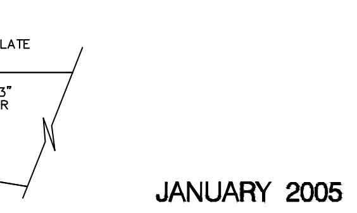

GALVANIZED CURB ARMOR 5/16" STEEL PLATE
1/2" DIA. X 3" STUD ANCHOR 12" O.C.
1" R
4" R

INLET LENGTH	BAR	NO.	SIZE	SPACING	LENGTH	WEIGHT
L=5'-0"	A	15	4	5" O.C.	13'-9 1/2"	136
	B	15	4	5" O.C.	5'-1 3/4"	52
	C	30	4	9" O.C.	3'-6"	70
	D	22	4	10" O.C.	6'-1"	89
	E	10	4	10 1/2" O.C.	6'-10"	46
	F	6	5	12" O.C.	2'-3"	27
	G	3	4	12" O.C.	9'-8"	20
	H	5	5	12" O.C.	1'-8"	9

* CONCRETE TOTAL=3.53 CU. YDS. M.H. CASTING=260 LBS. STEEL TOTAL=438 LBS.

INLET LENGTH	BAR	NO.	SIZE	SPACING	LENGTH	WEIGHT
L=10'-0"	A	27	4	5" O.C.	13'-9 1/2"	249
	B	27	4	5" O.C.	5'-1 3/4"	93
	C	37	4	9" O.C.	3'-6"	87
	D	22	4	10" O.C.	11'-1"	163
	E	10	4	10 1/2" O.C.	6'-10"	46
	F	12	5	12" O.C.	2'-3"	27
	G	3	4	12" O.C.	14'-8"	30
	H	5	5	12" O.C.	1'-8"	9

* CONCRETE TOTAL=5.75 CU. YDS. M.H. CASTING=260 LBS. STEEL TOTAL=704 LBS.

INLET LENGTH	BAR	NO.	SIZE	SPACING	LENGTH	WEIGHT
L=15'-0"	A	39	4	5" O.C.	13'-9 1/2"	359
	B	39	4	5" O.C.	5'-1 3/4"	134
	C	43	4	9" O.C.	3'-6"	101
	D	22	4	10" O.C.	16'-1"	236
	E	10	4	10 1/2" O.C.	6'-10"	46
	F	17	5	12" O.C.	2'-3"	38
	G	3	4	12" O.C.	19'-8"	40
	H	5	5	12" O.C.	1'-8"	9

* CONCRETE TOTAL=7.97 CU. YDS. M.H. CASTING=260 LBS. STEEL TOTAL=963 LBS.

INLET LENGTH	BAR	NO.	SIZE	SPACING	LENGTH	WEIGHT
L=20'-0"	A	51	4	5" O.C.	13'-9 1/2"	470
	B	51	4	5" O.C.	5'-1 3/4"	175
	C	50	4	9" O.C.	3'-6"	117
	D	22	4	10" O.C.	21'-1"	310
	E	10	4	10 1/2" O.C.	6'-10"	46
	F	22	5	12" O.C.	2'-3"	50
	G	3	4	12" O.C.	24'-8"	50
	H	5	5	12" O.C.	1'-8"	9

* CONCRETE TOTAL=10.19 CU. YDS. M.H. CASTING=260 LBS. STEEL TOTAL=1227 LBS.

INLET LENGTH	BAR	NO.	SIZE	SPACING	LENGTH	WEIGHT
L=25'-0"	A	63	4	5" O.C.	13'-9 1/2"	580
	B	63	4	5" O.C.	5'-1 3/4"	217
	C	57	4	9" O.C.	3'-6"	133
	D	22	4	10" O.C.	26'-1"	383
	E	10	4	10 1/2" O.C.	6'-10"	46
	F	27	5	12" O.C.	2'-3"	61
	G	3	4	12" O.C.	24'-8"	60
	H	5	5	12" O.C.	1'-8"	9

* CONCRETE TOTAL=12.41 CU. YDS. M.H. CASTING=260 LBS. STEEL TOTAL=1489 LBS.

INLET LENGTH	BAR	NO.	SIZE	SPACING	LENGTH	WEIGHT
L=30'-0"	A	75	4	5" O.C.	13'-9 1/2"	691
	B	75	4	5" O.C.	5'-1 3/4"	258
	C	63	4	9" O.C.	3'-6"	147
	D	22	4	10" O.C.	31'-1"	457
	E	10	4	10 1/2" O.C.	6'-10"	46
	F	32	5	12" O.C.	2'-3"	72
	G	3	4	12" O.C.	34'-8"	70
	H	5	5	12" O.C.	1'-8"	9

* CONCRETE TOTAL=14.63 CU. YDS. M.H. CASTING=260 LBS. STEEL TOTAL=1750 LBS.

* THESE FIGURES DO NOT EXCLUDE CONCRETE & STEEL INTERCEPTED BY MANHOLE AND REINFORCED CONC. PIPE.
* INCLUDES CONCRETE GUTTER FOR ON GRADE INLET. REDUCE BY .05 C.Y. FOR INLETS IN SUMP.

GENERAL NOTES

1. ALL BARS INTERCEPTING MANHOLE RING & REINFORCING CONCRETE PIPE SHALL BE FIELD CUT.
2. CONCRETE FOR STRUCTURES SHALL BE CLASS "A", 3000 PSI IN 28 DAYS.
3. ALL DIMENSIONS RELATING TO REINFORCING STEEL ARE TO CENTER BARS.
4. ALL EXPOSED CORNERS SHALL BE CHAMFERED TO 3/4"
5. CONSTRUCTION JOINT SHOWN AT FLOWLINE MAY BE RAISED A MAXIMUM OF 6" AT THE CONTRACTOR'S DISCRETION. ADJUST LENGTH OF VERTICAL STEEL AS REQUIRED.
6. ALL REINFORCING STEEL SHALL CONFORM TO A.S.T.M. A-615, GRADE 60 REQUIREMENTS.
7. INVERT OF DROP INLET TO BE SHAPED WITH CONCRETE FILL TO AFFECT DRAINAGE TO OUTLET PIPE.
8. DELETE 4 "C" BARS FROM SCHEDULE QUANTITIES IF MANHOLE RING AND COVER ARE PLACED AT END OF INLET.
9. CAST IRON MANHOLE RING AND COVER TO BE PLACED NEXT TO OUTLET PIPE, EXCEPT FOR VERTICAL OUTLET PIPE IN WHICH CASE MANHOLE RING AND COVER WILL BE OFFSET.
10. PAYMENT FOR ALL EXCAVATION, BACK FILLING, CONCRETE, REINFORCING STEEL, RING AND COVER SHALL BE INCLUDED IN THE UNIT COST OF ITEM 403 "STORM SEWER JUNCTION BOXES AND INLETS".

JANUARY 2005

STANDARD PLANS
CITY OF SAN ANTONIO, TEXAS
DEPARTMENT OF PUBLIC WORKS

TYPE "C" INLET
DETAILS

DRAWN BY: V. VASQUEZ	DATE	REVISIONS	SCALE: SEE ABOVE
			DATE:
CHECKED BY: NAT HARDY, P.E.			SHEET: OF

NOTE: REVISED PER BEXAR COUNTY COMMENTS

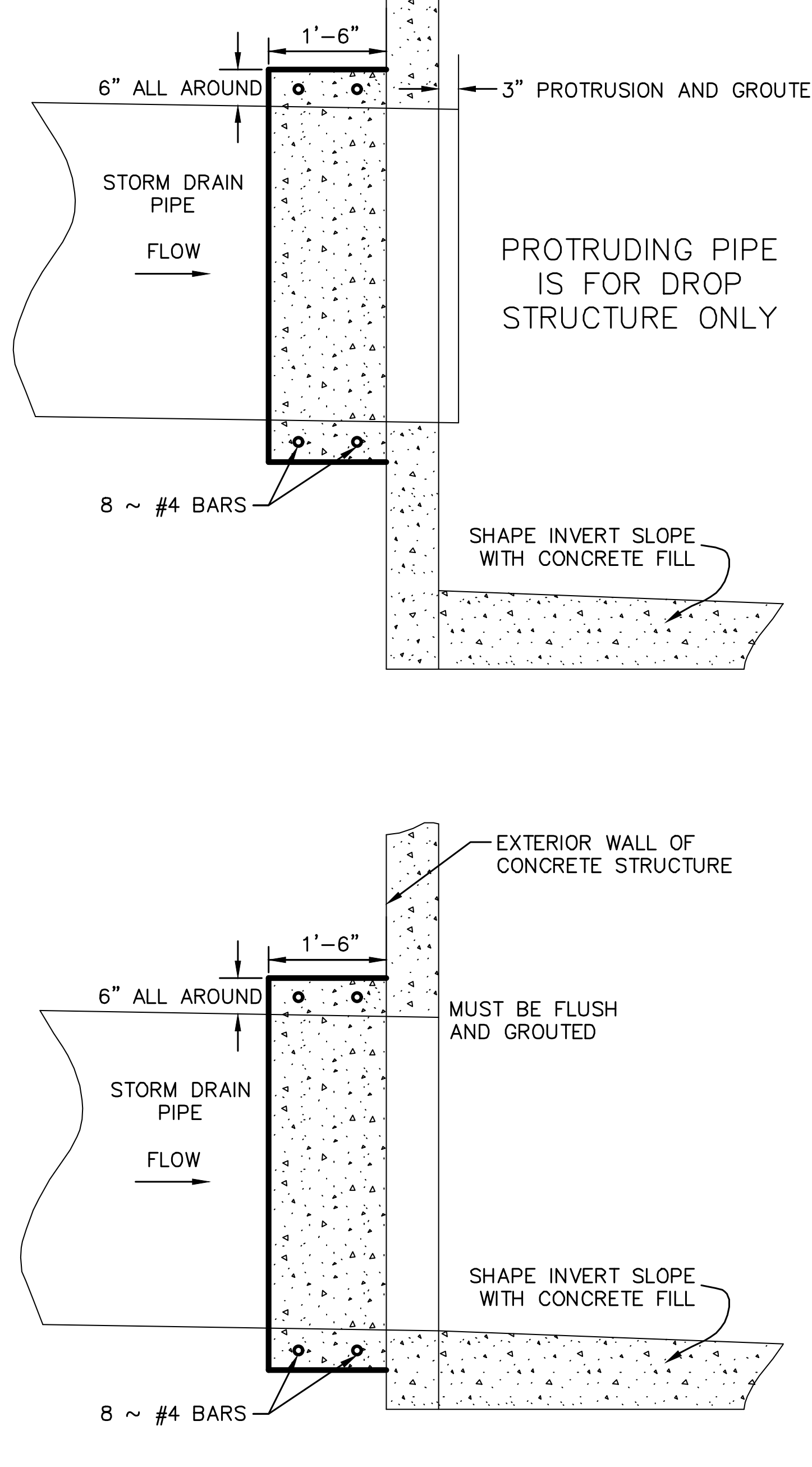

1'-6"
6" ALL AROUND
3" PROTRUSION AND GROUTED
STORM DRAIN PIPE
FLOW
PROTRUDING PIPE IS FOR DROP STRUCTURE ONLY
8 ~ #4 BARS
SHAPE INVERT SLOPE WITH CONCRETE FILL
EXTERIOR WALL OF CONCRETE STRUCTURE
1'-6"
6" ALL AROUND
MUST BE FLUSH AND GROUTED
STORM DRAIN PIPE
FLOW
SHAPE INVERT SLOPE WITH CONCRETE FILL
8 ~ #4 BARS

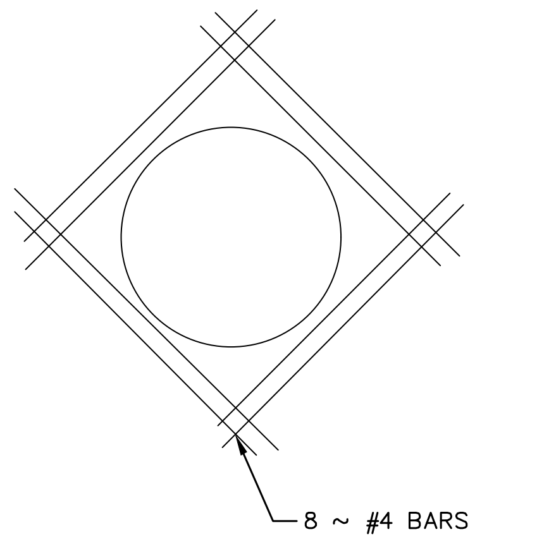

PIPE FLUSH WITH INVERT

NOTES:
1. CONCRETE FOR STRUCTURE SHALL BE CLASS "A," 3,000 P.S.I. AT 28 DAYS.

2. ALL EXPOSED EDGES SHALL BE CHAMFERED 3/4".

3. REINFORCING STEEL SHALL BE NEW BILLET STEEL, INTERMEDIATE GRADE, ASTM. A-15. THE DEFORMATION SHALL CONFORM TO ASTM. A-305.

4. ALL DIMENSIONS RELATING TO REINFORCING STEEL ARE TO CENTER OF BARS.

5. ALL BARS INTERCEPTING MANHOLE OPENING AND REINFORCED CONCRETE PIPE SHALL BE FIELD-CUT.

6. WHERE LAPPING OF BARS IS REQUIRED, A MINIMUM LAP OF 33 DIAMETERS SHALL BE USED.

7. INVERT OF JUNCTION BOX TO BE SHAPED WITH CONCRETE FILL (3,000 P.S.I. MIN.) TO EFFECT DRAINAGE TO OUTLET PIPE. COST SUBSIDIARY TO CLASS "A" CONCRETE (JUNCTION BOXES).

CONCRETE COLLAR DETAIL

NOT-TO-SCALE
PROVIDE AT CONNECTION TO ALL STRUCTURES

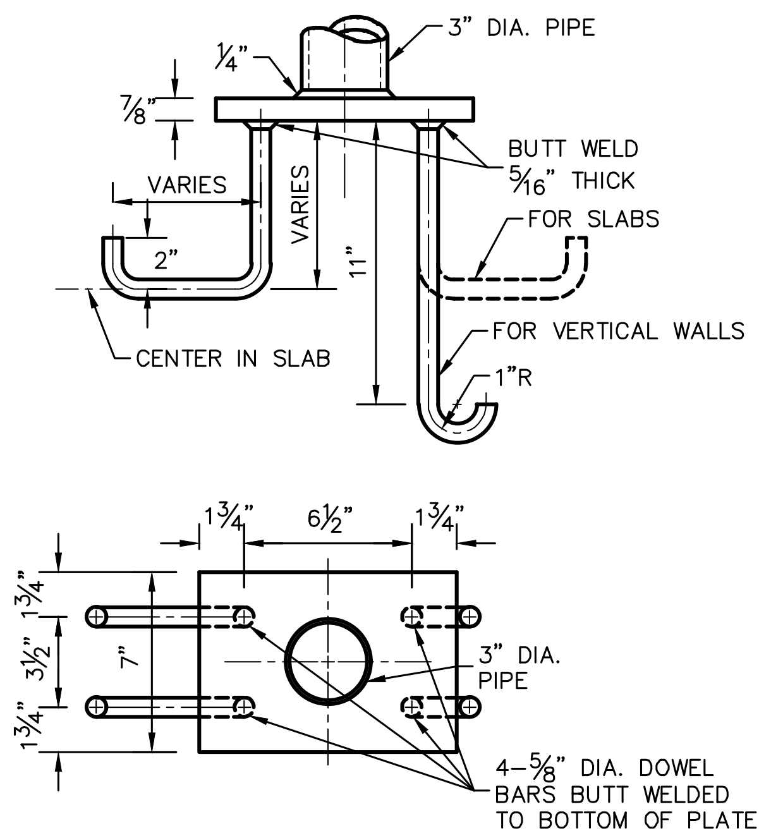

3" DIA. PIPE
¼"
⅞"
VARIES
VARIES
2"
11"
BUTT WELD
5/16" THICK
FOR SLABS
CENTER IN SLAB
FOR VERTICAL WALLS
1"R
1¾"
6½"
1¾"
1¾"
3½"
1¾"
7"
3" DIA. PIPE
4-⅝" DIA. DOWEL BARS BUTT WELDED TO BOTTOM OF PLATE

PIPE ANCHORAGE DETAIL

NOT-TO-SCALE

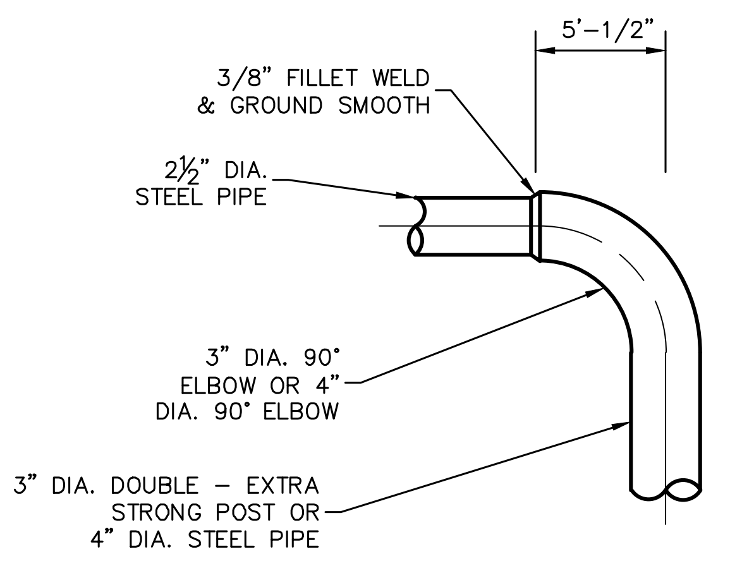

5'-1/2"
3/8" FILLET WELD & GROUND SMOOTH
2½" DIA. STEEL PIPE
3" DIA. 90° ELBOW OR 4" DIA. 90° ELBOW
3" DIA. DOUBLE - EXTRA STRONG POST OR 4" DIA. STEEL PIPE

NOTE: A NEAT END SECTION, SATISFACTORY TO THE ENGINEER, FROM SUBMITTED SHOP DRAWINGS, MAY BE USED IN LIEU OF THE 90° WELDING ELBOW SHOWN.

DETAIL OF 90° WELDING ELBOW

NOT-TO-SCALE

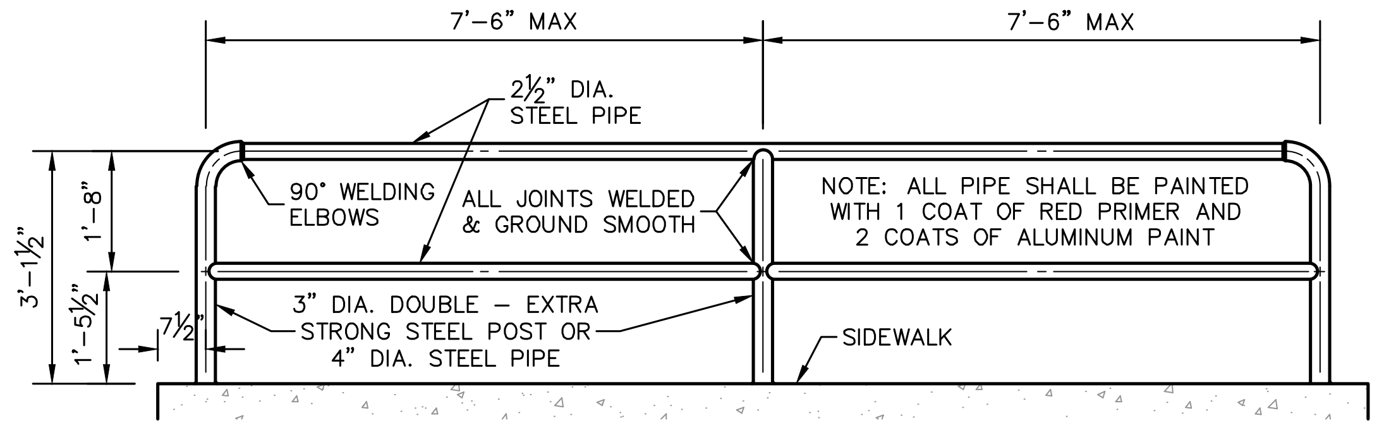

7'-6" MAX
7'-6" MAX
2½" DIA. STEEL PIPE
90° WELDING ELBOWS
ALL JOINTS WELDED & GROUND SMOOTH
NOTE: ALL PIPE SHALL BE PAINTED WITH 1 COAT OF RED PRIMER AND 2 COATS OF ALUMINUM PAINT
3'-1½"
1'-8"
1'-5½"
7½"
3" DIA. DOUBLE - EXTRA STRONG STEEL POST OR 4" DIA. STEEL PIPE
SIDEWALK

NOTE: ALL CONSTRUCTION OF HANDRAIL SHALL FOLLOW THE CITY OF SAN ANTONIO STANDARD SPECIFICATIONS FOR PUBLIC WORKS CONSTRUCTION.

PIPE RAILING DETAIL

NOT-TO-SCALE

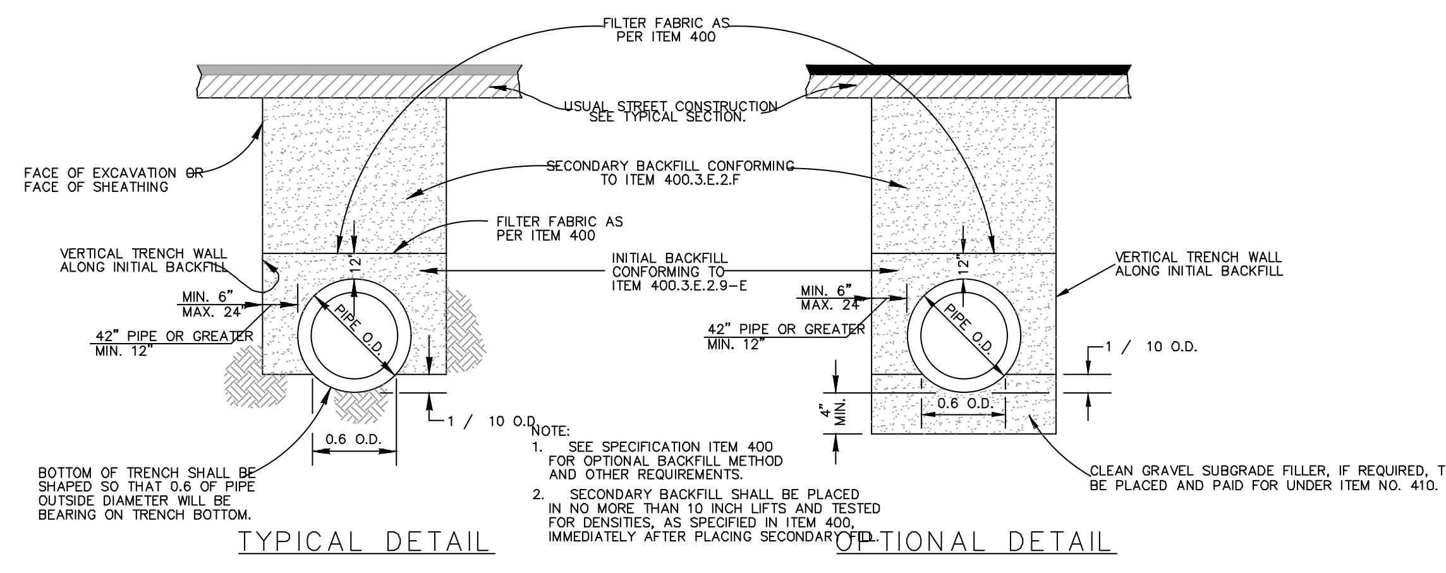

FILTER FABRIC AS PER ITEM 400
USUAL STREET CONSTRUCTION SEE TYPICAL SECTION
FACE OF EXCAVATION OR FACE OF SHEATHING
SECONDARY BACKFILL CONFORMING TO ITEM 400.3.E.2.F
FILTER FABRIC AS PER ITEM 400
INITIAL BACKFILL CONFORMING TO ITEM 400.3.E.2.b-E
VERTICAL TRENCH WALL ALONG INITIAL BACKFILL
VERTICAL TRENCH WALL ALONG INITIAL BACKFILL
MIN. 6" MAX. 24"
42" PIPE OR GREATER MIN. 12"
BOTTOM OF TRENCH SHALL BE SHAPED SO THAT 0.6 OF PIPE OUTSIDE DIAMETER WILL BE BEARING ON TRENCH BOTTOM.
0.6 O.D.
1 / 10 O.D.
CLEAN GRAVEL SUBGRADE FILLER, IF REQUIRED, TO BE PLACED AND PAID FOR UNDER ITEM NO. 410.
NOTE:
1. SEE SPECIFICATION ITEM 400 FOR OPTIONAL BACKFILL METHOD AND OTHER REQUIREMENTS.
2. SECONDARY BACKFILL SHALL BE PLACED IN NO MORE THAN 12 INCH LIFTS AND TESTED FOR DENSITIES, AS SPECIFIED IN ITEM 400, IMMEDIATELY AFTER PLACING SECONDARY
TYPICAL DETAIL
OPTIONAL DETAIL

PIPE BEDDING & BACKFILL DETAILS

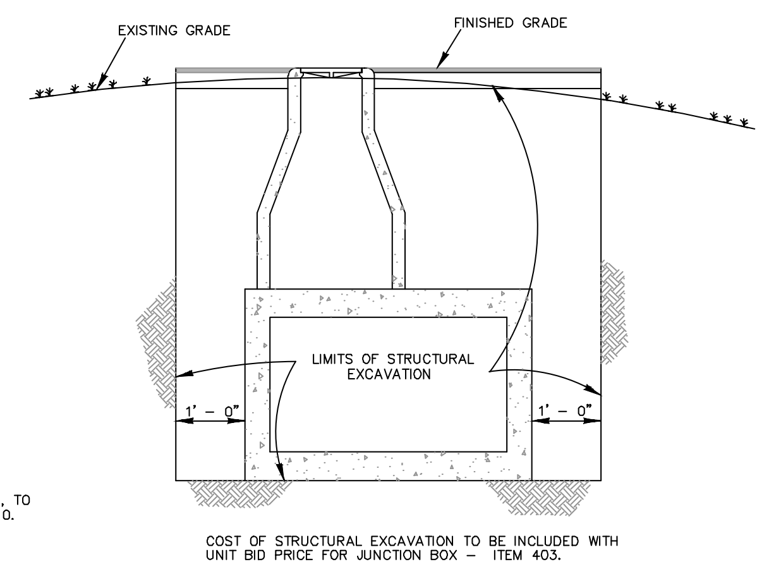

EXISTING GRADE
FINISHED GRADE
LIMITS OF STRUCTURAL EXCAVATION
1'-0"
1'-0"

COST OF STRUCTURAL EXCAVATION TO BE INCLUDED WITH UNIT BID PRICE FOR JUNCTION BOX - ITEM 403.

STRUCTURAL EXCAVATION AT JUNCTION BOXES

NO SCALE

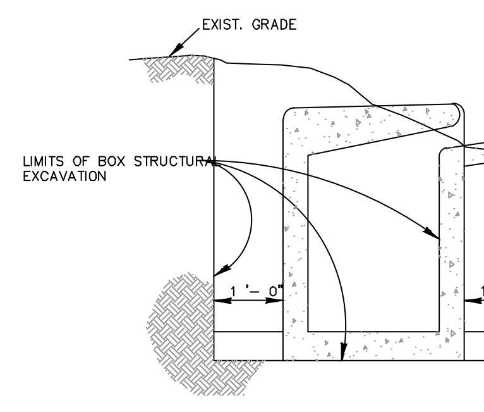

EXIST. GRADE
LIMITS OF BOX STRUCTURE EXCAVATION
1'-0"
1'-0"

SIDE VIEW

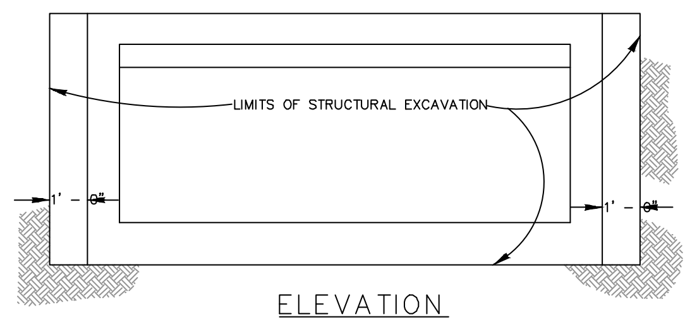

LIMITS OF STRUCTURAL EXCAVATION

ELEVATION

COST OF STRUCTURAL EXCAVATION TO BE INCLUDED WITH UNIT BID PRICE FOR INLETS - ITEM 403.

STRUCTURAL EXCAVATIONS AT DRAINAGE INLETS

NO SCALE

MAY 2009

CITY OF SAN ANTONIO
CAPITAL IMPROVEMENTS MANAGEMENT SERVICES DEPARTMENT

PIPE BEDDING & MISCELLANEOUS
DRAINAGE DETAILS

________% SUBMITTAL	PROJECT NO.:		DATE:
DRWN. BY:	DSGN. BY:	CHKD. BY:	SHEET NO.: _____OF___

NO.	REVISION	DATE

STATE OF TEXAS
CALEB M. CHANCE
98401
LICENSED PROFESSIONAL ENGINEER
Caleb Chance 5/29/25

PAPE-DAWSON ENGINEERS
2000 NW LOOP 410 | SAN ANTONIO, TX 78213 | 210.375.9000
TEXAS ENGINEERING FIRM #470 | TEXAS SURVEYING FIRM #10028800

STONEHILL UNITS 2B & 6A
SAN ANTONIO, TEXAS

DRAINAGE DETAILS

PLAT NO. 24-11800312
JOB NO. 12456-13
DATE JULY 2024
DESIGNER RA
CHECKED BL DRAWN JM
SHEET C1.12

SCALE: 1"= 50'
0' 50' 100' 150'

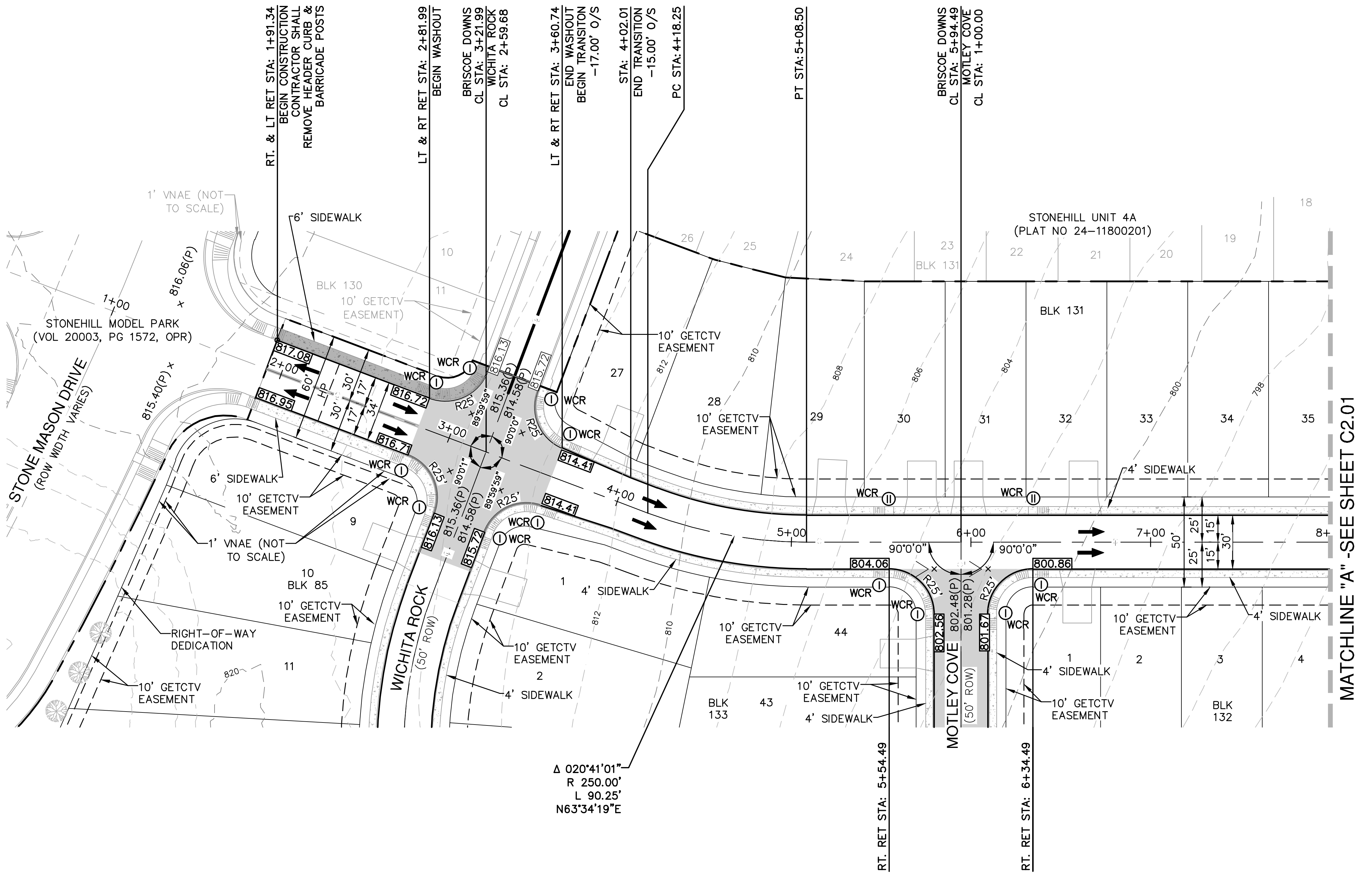
RT. & LT RET STA: 1+91.34
BEGIN CONSTRUCTION
CONTRACTOR SHALL
REMOVE HEADER CURB &
BARRICADE POSTS
LT & RT RET STA: 2+81.99
BEGIN WASHOUT
BRISCOE DOWNS
CL STA: 3+21.99
WICHITA ROCK
CL STA: 2+59.68
LT & RT RET STA: 3+60.74
END WASHOUT
BEGIN TRANSITON
-17.00' O/S
STA: 4+02.01
END TRANSITION
-15.00' O/S
PC STA: 4+18.25
PT STA: 5+08.50
BRISCOE DOWNS
CL STA: 5+94.49
MOTLEY COVE
CL STA: 1+00.00
1' VNAE (NOT TO SCALE)
6' SIDEWALK
STONEHILL UNIT 4A
(PLAT NO 24-11800201)
BLK 130
BLK 131
10' GETCTV EASEMENT
STONEHILL MODEL PARK
(VOL 20003, PG 1572, OPR)
STONE MASON DRIVE
(ROW WIDTH VARIES)
816.06(P)
815.40(P)
817.08
816.95
816.72
816.71
815.13
815.72
814.41
812.43
804.06
800.86
802.58
801.81
WCR
R25'
3+00
4+00
5+00
6+00
7+00
8+
90°0'0"
4' SIDEWALK
6' SIDEWALK
1' VNAE (NOT TO SCALE)
BLK 85
RIGHT-OF-WAY DEDICATION
WICHITA ROCK
(50' ROW)
MOTLEY COVE
(50' ROW)
BLK 133
BLK 132
MATCHLINE "A" -SEE SHEET C2.01
Δ 020°41'01"
R 250.00'
L 90.25'
N63°34'19"E
RT. RET STA: 5+54.49
RT. RET STA: 6+34.49
50'
25'
15'
30'

STREET LEGEND

PROJECT LIMITS	——— – – ———
MAINTAIN GUTTER	—→—— —→—
EXISTING CONTOUR	– – – – 970 – – – –
WHEELCHAIR RAMP	(I)
CENTERLINE	CL
RADIUS POINT	RP
POINT OF CURVATURE	PC
POINT OF TANGENCY	PT
RETURN	RET
DRAINAGE FLOW ARROW	➡
TOP OF CURB SPOT ELEVATION	857.30
EXISTING ELEVATION	857.00(E) ×
PAVEMENT ELEVATION	857.00(P) ×
WASHOUT CROWN SECTION	▨
SIDEWALK (HOMEOWNER'S RESPONSIBILITY)	▨
SIDEWALK (DEVELOPER'S RESPONSIBILITY)	▨
DRIVEWAY	
5'x5' ADA PASSING SPACE	▨
5'x5' ADA PASSING SPACE (DEVELOPER'S RESPONSIBILITY)	▨

BRISCOE DOWNS
STA. 1+91.34 TO 8+00.00

VERTICAL SCALE: 1" = 5'
HORIZONTAL SCALE: 1" = 50'

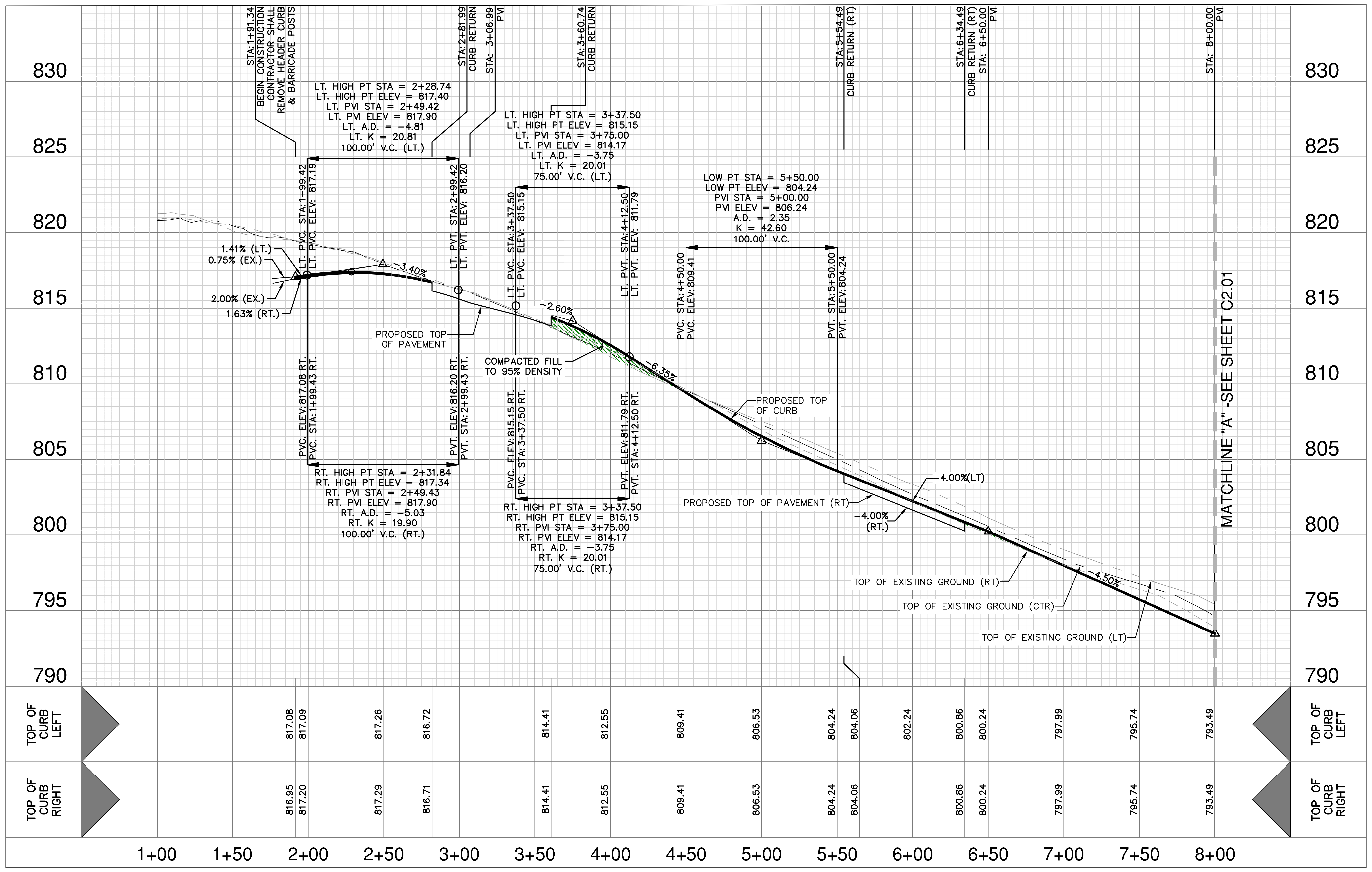

STREET NOTES:

1. A BEXAR COUNTY ROW PERMIT MUST BE OBTAINED BEFORE WORKING IN BEXAR COUNTY ROW. CONTRACTOR SHALL COORDINATE A TRAFFIC CONTROL PLAN FOR ALL WORK WITHIN THE ROW. ADDITIONAL WARNING SIGNS MAY BE RECOMMENDED BY THE ENGINEER ONCE THE ROADWAYS ARE CONSTRUCTED.
2. CONTRACTOR SHALL MATCH EXISTING PAVEMENT AT TIE-IN. IF EXISTING PAVEMENT ELEVATION DIFFERS SIGNIFICANTLY, CONTRACTOR SHALL NOTIFY THE ENGINEER PRIOR TO CONTINUING WORK.
3. SIDEWALKS SHALL BE CONSTRUCTED 3-FT FROM THE BACK OF CURB FOR ALL LOCATIONS WHERE THE SIDEWALK IS SHOWN OFFSET. REFER TO STREET DETAIL SHEET FOR SIDEWALK AND RAMP DETAILS.
4. NO PERMANENT STRUCTURES HIGHER THAN 3 FEET, AND LOWER THAN 8 FEET ABOVE THE PAVEMENT, INCLUDING STRUCTURES, WALLS, FENCES, AND VEGETATION, SHALL BE CONSTRUCTED OR ALLOWED WITHIN THE CLEAR VISION EASEMENT. CONTRACTOR SHALL GRADE AREAS WITHIN CLEAR VISION EASEMENTS SUCH THAT THE ELEVATION WITHIN THE CLEAR VISION EASEMENT IS NOT HIGHER THAN 3 FEET ABOVE THE ADJACENT TOP OF PAVEMENT.
5. DRIVEWAYS SHOWN ON THIS PLAN ARE FOR THE SOLE PURPOSE OF INDICATING A POTENTIAL CONFLICT WITH CURB RAMP, DRAINAGE INFRASTRUCTURE, OR OTHER CONFLICT. DRIVEWAY LOCATION IS SUBJECT TO CHANGE BASED ON HOME SELECTION AND FINAL LOT DESIGN.
6. CHANGES IN THE SIDEWALK LOCATION FOR A MAXIMUM LINEAR DISTANCE OF TWO HUNDRED (200) FEET ARE PERMITTED TO BE APPROVED BY THE FIELD INSPECTOR WITHOUT AMENDING THE STREET PLAN OR UTILITY LAYOUT PER UDC SECTION 35-506 (Q)(6).
7. THE CONSTRUCTION OF SIDEWALKS ADJACENT TO ALL 900 SERIES LOTS WILL BE THE RESPONSIBILITY OF THE DEVELOPER AS SHOWN ON THE OVERALL SIGNAGE PLAN.

NO.	REVISION	DATE

STATE OF TEXAS
CALEB M. CHANCE
98401
LICENSED PROFESSIONAL ENGINEER
Caleb Chance
5/29/25

PAPE-DAWSON ENGINEERS
2000 NW LOOP 410 I SAN ANTONIO, TX 78213 I 210.375.9000
TEXAS ENGINEERING FIRM #470 I TEXAS SURVEYING FIRM #10028800

STONEHILL UNITS 2B & 6A
SAN ANTONIO, TEXAS

BRISCOE DOWNS PLAN & PROFILE
(STA. 1+91.34 TO STA. 8+00.00)

PLAT NO. 24-11800312
JOB NO. 12456-13
DATE JULY 2024
DESIGNER RA
CHECKED BL DRAWN KC
SHEET C2.00

Date: May 30, 2025, 9:00am User ID: ralvarez
File: P:\124\56\13\Design\Civil\STA1-1245613-BRISCOE DOWNS.dwg

SCALE: 1"= 50'
0' 50' 100' 150'

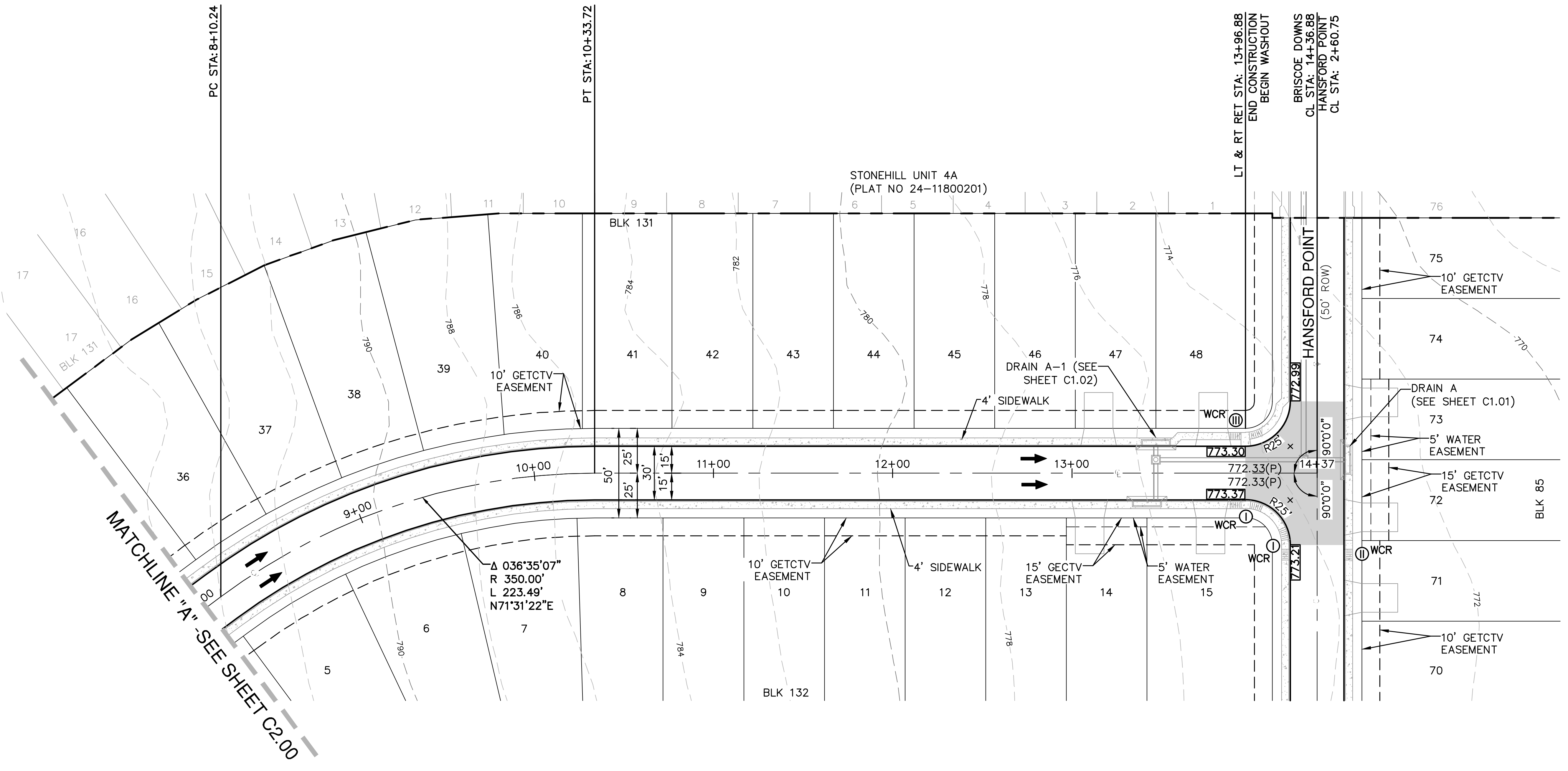
PC STA:8+10.24
PT STA:10+33.72
LT & RT RET STA: 13+96.88
END CONSTRUCTION
BEGIN WASHOUT
BRISCOE DOWNS
CL STA: 14+36.88
HANSFORD POINT
CL STA: 2+60.75
STONEHILL UNIT 4A
(PLAT NO 24-11800201)
BLK 131
BLK 132
BLK 85
HANSFORD POINT
(50' ROW)
10' GETCTV EASEMENT
4' SIDEWALK
DRAIN A-1 (SEE SHEET C1.02)
DRAIN A
(SEE SHEET C1.01)
5' WATER EASEMENT
15' GETCTV EASEMENT
15' GECTV EASEMENT
WCR
773.30
773.37
772.99
773.21
772.33(P)
772.33(P)
R25'
90°0'0"
14+37
Δ 036°35'07"
R 350.00'
L 223.49'
N71°31'22"E
9+00
10+00
11+00
12+00
13+00
50'
25'
25'
30'
15'
15'
MATCHLINE "A" -SEE SHEET C2.00

STREET LEGEND

PROJECT LIMITS	—— – – ——
MAINTAIN GUTTER	— → — — → —
EXISTING CONTOUR	– – – 970 – – –
WHEELCHAIR RAMP	(I)
CENTERLINE	CL
RADIUS POINT	RP
POINT OF CURVATURE	PC
POINT OF TANGENCY	PT
RETURN	RET
DRAINAGE FLOW ARROW	➡
TOP OF CURB SPOT ELEVATION	857.30
EXISTING ELEVATION	857.00(E) ×
PAVEMENT ELEVATION	857.00(P) ×
WASHOUT CROWN SECTION	▨
SIDEWALK (HOMEOWNER'S RESPONSIBILITY)	▨
SIDEWALK (DEVELOPER'S RESPONSIBILITY)	▨
DRIVEWAY	⌐
5'x5' ADA PASSING SPACE	▨
5'x5' ADA PASSING SPACE (DEVELOPER'S RESPONSIBILITY)	▨

BRISCOE DOWNS
STA. 8+00.00 TO END

VERTICAL SCALE: 1" = 5'
HORIZONTAL SCALE: 1" = 50'

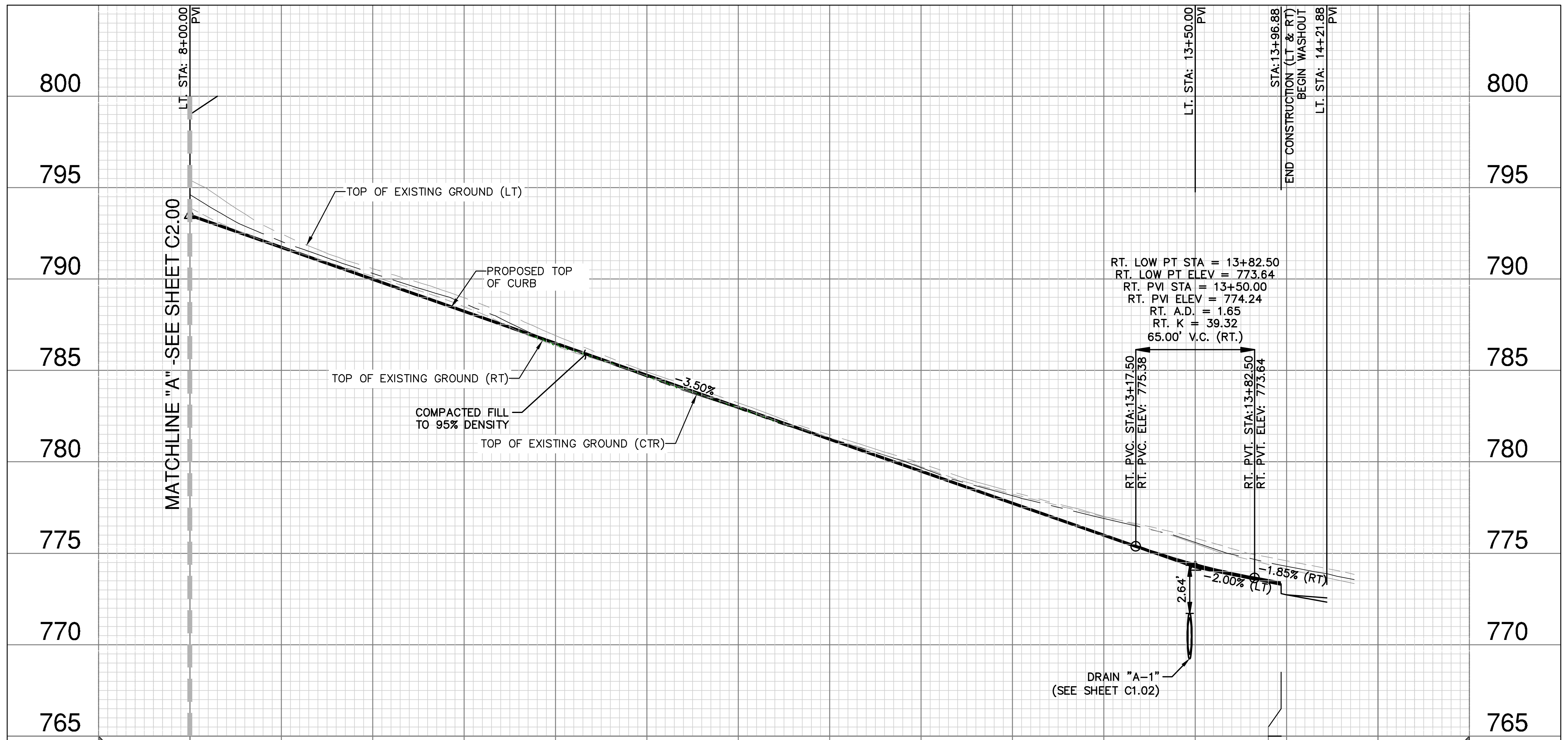
800
795
790
785
780
775
770
765
LT. STA: 8+00.00 PVI
LT. STA: 13+50.00 PVI
STA:13+96.88
END CONSTRUCTION (LT & RT)
BEGIN WASHOUT
LT. STA: 14+21.88 PVI
TOP OF EXISTING GROUND (LT)
PROPOSED TOP OF CURB
TOP OF EXISTING GROUND (RT)
COMPACTED FILL TO 95% DENSITY
TOP OF EXISTING GROUND (CTR)
-3.50%
MATCHLINE "A" -SEE SHEET C2.00
RT. LOW PT STA = 13+82.50
RT. LOW PT ELEV = 773.64
RT. PVI STA = 13+50.00
RT. PVI ELEV = 774.24
RT. A.D. = 1.65
RT. K = 39.32
65.00' V.C. (RT.)
RT. PVC. STA:13+17.50
RT. PVC. ELEV: 775.38
RT. PVT. STA:13+82.50
RT. PVT. ELEV: 773.64
2.64'
-2.00% (LT)
-1.85% (RT)
DRAIN "A-1"
(SEE SHEET C1.02)

	8+00	8+50	9+00	9+50	10+00	10+50	11+00	11+50	12+00	12+50	13+00	13+50		14+00	14+50
TOP OF CURB LEFT	793.49	791.74	789.99	788.24	786.49	784.74	782.99	781.24	779.49	777.74	775.99	774.37	773.30		
TOP OF CURB RIGHT	793.49	791.74	789.99	788.24	786.49	784.74	782.99	781.24	779.49	777.74	775.99	774.24	773.37		

STREET NOTES:

1. A BEXAR COUNTY ROW PERMIT MUST BE OBTAINED BEFORE WORKING IN BEXAR COUNTY ROW. CONTRACTOR SHALL COORDINATE A TRAFFIC CONTROL PLAN FOR ALL WORK WITHIN THE ROW. ADDITIONAL WARNING SIGNS MAY BE RECOMMENDED BY THE ENGINEER ONCE THE ROADWAYS ARE CONSTRUCTED.
2. CONTRACTOR SHALL MATCH EXISTING PAVEMENT AT TIE-IN. IF EXISTING PAVEMENT ELEVATION DIFFERS SIGNIFICANTLY, CONTRACTOR SHALL NOTIFY THE ENGINEER PRIOR TO CONTINUING WORK.
3. SIDEWALKS SHALL BE CONSTRUCTED 3-FT FROM THE BACK OF CURB FOR ALL LOCATIONS WHERE THE SIDEWALK IS SHOWN OFFSET. REFER TO STREET DETAIL SHEET FOR SIDEWALK AND RAMP DETAILS.
4. NO PERMANENT STRUCTURES HIGHER THAN 3 FEET, AND LOWER THAN 8 FEET ABOVE THE PAVEMENT, INCLUDING STRUCTURES, WALLS, FENCES, AND VEGETATION, SHALL BE CONSTRUCTED OR ALLOWED WITHIN THE CLEAR VISION EASEMENT. CONTRACTOR SHALL GRADE AREAS WITHIN CLEAR VISION EASEMENTS SUCH THAT THE ELEVATION WITHIN THE CLEAR VISION EASEMENT IS NOT HIGHER THAN 3 FEET ABOVE THE ADJACENT TOP OF PAVEMENT.
5. DRIVEWAYS SHOWN ON THIS PLAN ARE FOR THE SOLE PURPOSE OF INDICATING A POTENTIAL CONFLICT WITH CURB RAMP, DRAINAGE INFRASTRUCTURE, OR OTHER CONFLICT. DRIVEWAY LOCATION IS SUBJECT TO CHANGE BASED ON HOME SELECTION AND FINAL LOT DESIGN.
6. CHANGES IN THE SIDEWALK LOCATION FOR A MAXIMUM LINEAR DISTANCE OF TWO HUNDRED (200) FEET ARE PERMITTED TO BE APPROVED BY THE FIELD INSPECTOR WITHOUT AMENDING THE STREET PLAN OR UTILITY LAYOUT PER UDC SECTION 35-506 (Q)(6).
7. THE CONSTRUCTION OF SIDEWALKS ADJACENT TO ALL 900 SERIES LOTS WILL BE THE RESPONSIBILITY OF THE DEVELOPER AS SHOWN ON THE OVERALL SIGNAGE PLAN.

NO.	REVISION	DATE

CALEB M. CHANCE
98401
5/29/25

PAPE-DAWSON ENGINEERS
2000 NW LOOP 410 I SAN ANTONIO, TX 78213 I 210.375.9000
TEXAS ENGINEERING FIRM #470 I TEXAS SURVEYING FIRM #10028800

STONEHILL UNITS 2B & 6A
SAN ANTONIO, TEXAS

BRISCOE DOWNS PLAN & PROFILE
(STA. 8+00.00 TO END)

PLAT NO. 24-11800312
JOB NO. 12456-13
DATE JULY 2024
DESIGNER RA
CHECKED BL DRAWN KC
SHEET C2.01

Date: May 30, 2025, 9:00am User ID: ralvarez
File: P:\124\56\13\Design\Civil\STA1-1245613-BRISCOE DOWNS.dwg

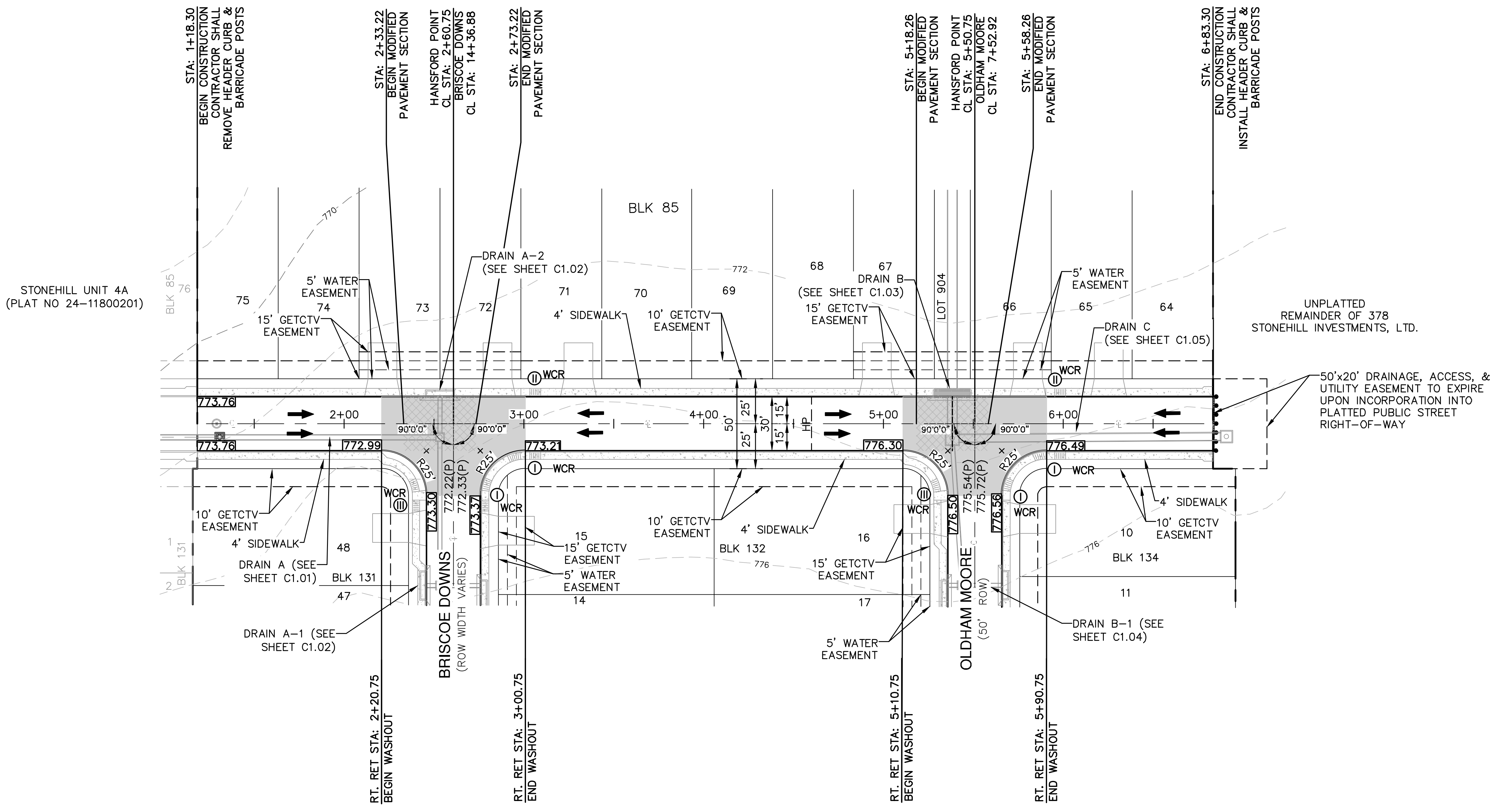
STA: 1+18.30
BEGIN CONSTRUCTION
CONTRACTOR SHALL
REMOVE HEADER CURB &
BARRICADE POSTS
STA: 2+33.22
BEGIN MODIFIED
PAVEMENT SECTION
HANSFORD POINT
CL STA: 2+60.75
BRISCOE DOWNS
CL STA: 14+36.88
STA: 2+73.22
END MODIFIED
PAVEMENT SECTION
STA: 5+18.26
BEGIN MODIFIED
PAVEMENT SECTION
HANSFORD POINT
CL STA: 5+50.75
OLDHAM MOORE
CL STA: 7+52.92
STA: 5+58.26
END MODIFIED
PAVEMENT SECTION
STA: 6+83.30
END CONSTRUCTION
CONTRACTOR SHALL
INSTALL HEADER CURB &
BARRICADE POSTS
BLK 85
STONEHILL UNIT 4A
(PLAT NO 24-11800201)
BLK 85
76
75
74
73
72
71
70
69
68
67
66
65
64
770
772
776
5' WATER
EASEMENT
15' GETCTV
EASEMENT
DRAIN A-2
(SEE SHEET C1.02)
4' SIDEWALK
10' GETCTV
EASEMENT
DRAIN B
(SEE SHEET C1.03)
LOT 904
DRAIN C
(SEE SHEET C1.05)
UNPLATTED
REMAINDER OF 378
STONEHILL INVESTMENTS, LTD.
50'x20' DRAINAGE, ACCESS, &
UTILITY EASEMENT TO EXPIRE
UPON INCORPORATION INTO
PLATTED PUBLIC STREET
RIGHT-OF-WAY
WCR
2+00
3+00
4+00
5+00
6+00
773.76
773.76
772.99
773.21
776.30
776.49
90°0'0"
R25'
50'
25'
30'
15'
HP
772.22(P)
772.33(P)
773.30
773.37
775.54(P)
775.72(P)
776.50
776.56
10' GETCTV
EASEMENT
4' SIDEWALK
48
47
1
2
BLK 131
DRAIN A (SEE
SHEET C1.01)
DRAIN A-1 (SEE
SHEET C1.02)
BRISCOE DOWNS
(ROW WIDTH VARIES)
15
15' GETCTV
EASEMENT
5' WATER
EASEMENT
14
BLK 132
16
17
OLDHAM MOORE
(50' ROW)
BLK 134
10
11
DRAIN B-1 (SEE
SHEET C1.04)
RT. RET STA: 2+20.75
BEGIN WASHOUT
RT. RET STA: 3+00.75
END WASHOUT
RT. RET STA: 5+10.75
BEGIN WASHOUT
RT. RET STA: 5+90.75
END WASHOUT

SCALE: 1"= 50'
0' 50' 100' 150'

STREET LEGEND

PROJECT LIMITS	— — — —
MAINTAIN GUTTER	—> — —> —
EXISTING CONTOUR	- - - 970 - - -
WHEELCHAIR RAMP	(I)
CENTERLINE	CL
RADIUS POINT	RP
POINT OF CURVATURE	PC
POINT OF TANGENCY	PT
RETURN	RET
DRAINAGE FLOW ARROW	➡
TOP OF CURB SPOT ELEVATION	857.30
EXISTING ELEVATION	857.00(E) ×
PAVEMENT ELEVATION	857.00(P) ×
WASHOUT CROWN SECTION	▨
SIDEWALK (HOMEOWNER'S RESPONSIBILITY)	▨
SIDEWALK (DEVELOPER'S RESPONSIBILITY)	▨
DRIVEWAY	
5'x5' ADA PASSING SPACE	▨
5'x5' ADA PASSING SPACE (DEVELOPER'S RESPONSIBILITY)	▨
MODIFIED PAVEMENT SECTION	▨

HANSFORD POINT
STA. 1+18.30 TO END

VERTICAL SCALE: 1" = 5'
HORIZONTAL SCALE: 1" = 50'

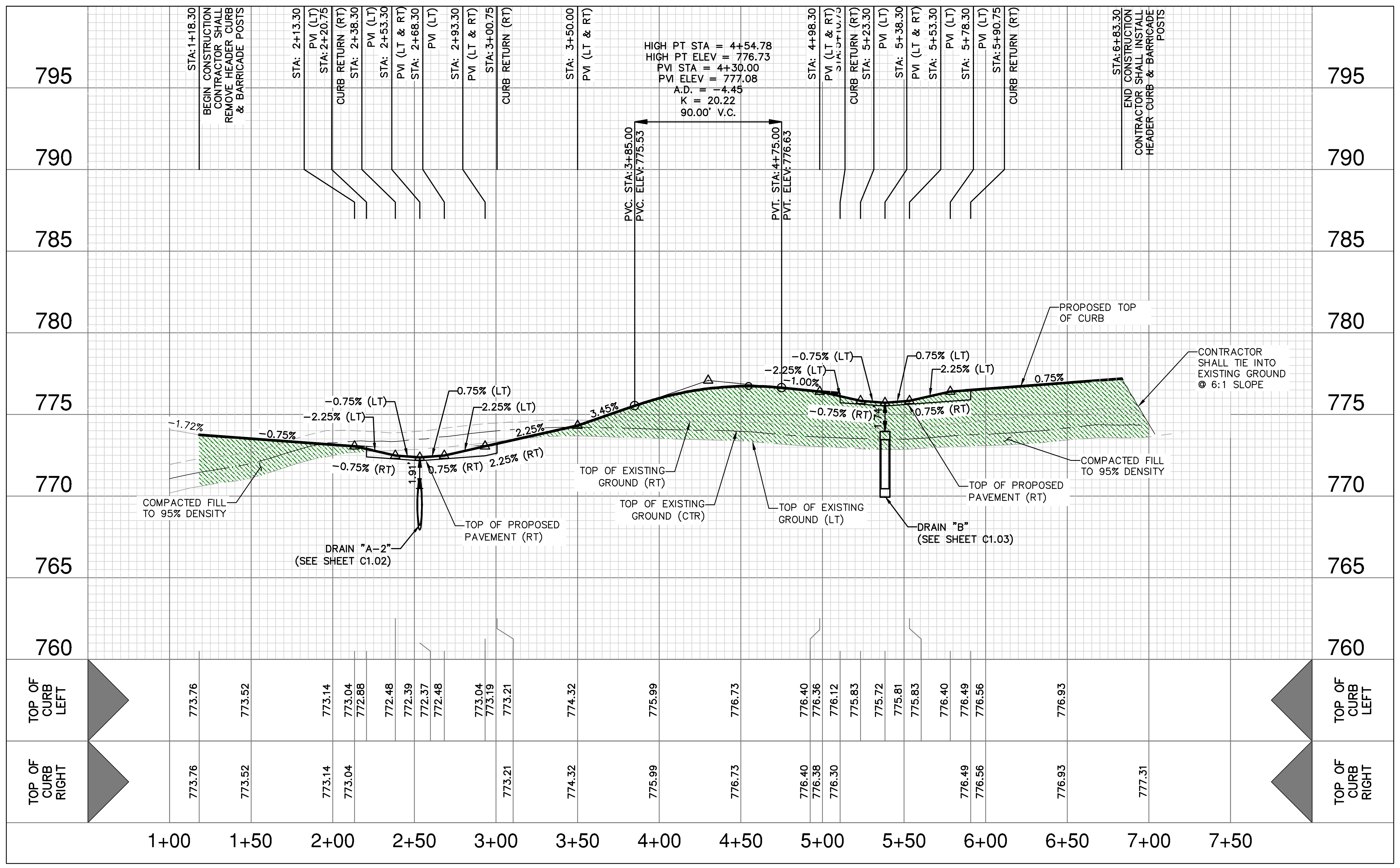
795
790
785
780
775
770
765
760
STA:1+18.30
BEGIN CONSTRUCTION
CONTRACTOR SHALL
REMOVE HEADER CURB
& BARRICADE POSTS
STA: 2+13.30
PVI (LT)
STA: 2+20.75
CURB RETURN (RT)
STA: 2+38.30
PVI (LT)
STA: 2+53.30
PVI (LT & RT)
STA: 2+68.30
PVI (LT)
STA: 2+93.30
PVI (LT & RT)
STA: 3+00.75
CURB RETURN (RT)
STA: 3+50.00
PVI (LT & RT)
HIGH PT STA = 4+54.78
HIGH PT ELEV = 776.73
PVI STA = 4+30.00
PVI ELEV = 777.08
A.D. = -4.45
K = 20.22
90.00' V.C.
PVC. STA: 3+85.00
PVC. ELEV: 775.53
PVT. STA: 4+75.00
PVT. ELEV: 776.63
STA: 4+98.30
PVI (LT & RT)
STA: 5+10.75
CURB RETURN (RT)
STA: 5+23.30
PVI (LT)
STA: 5+38.30
PVI (LT & RT)
STA: 5+53.30
PVI (LT)
STA: 5+78.30
PVI (LT)
STA: 5+90.75
CURB RETURN (RT)
STA: 6+83.30
END CONSTRUCTION
CONTRACTOR SHALL INSTALL
HEADER CURB & BARRICADE
POSTS
-1.72%
-0.75%
-0.75% (LT)
-2.25% (LT)
-0.75% (RT)
1.91'
0.75% (LT)
2.25% (LT)
0.75% (RT)
2.25% (RT)
2.25%
3.45%
-0.75% (LT)
-2.25% (LT)
-1.00%
-0.75% (RT)
1.74'
0.75% (LT)
2.25% (LT)
0.75% (RT)
0.75%
COMPACTED FILL
TO 95% DENSITY
DRAIN "A-2"
(SEE SHEET C1.02)
TOP OF PROPOSED
PAVEMENT (RT)
TOP OF EXISTING
GROUND (RT)
TOP OF EXISTING
GROUND (CTR)
TOP OF EXISTING
GROUND (LT)
DRAIN "B"
(SEE SHEET C1.03)
TOP OF PROPOSED
PAVEMENT (RT)
PROPOSED TOP
OF CURB
COMPACTED FILL
TO 95% DENSITY
CONTRACTOR
SHALL TIE INTO
EXISTING GROUND
@ 6:1 SLOPE
TOP OF CURB LEFT
773.76 773.52 773.14 773.04 772.88 772.48 772.39 772.37 772.48 773.04 773.19 773.21 774.32 775.99 776.73 776.40 776.36 776.12 775.83 775.72 775.81 775.83 776.40 776.49 776.56 776.93
TOP OF CURB RIGHT
773.76 773.52 773.14 773.04 773.21 774.32 775.99 776.73 776.40 776.38 776.30 776.49 776.56 776.93 777.31
1+00
1+50
2+00
2+50
3+00
3+50
4+00
4+50
5+00
5+50
6+00
6+50
7+00
7+50

STREET NOTES:

1. A BEXAR COUNTY ROW PERMIT MUST BE OBTAINED BEFORE WORKING IN BEXAR COUNTY ROW. CONTRACTOR SHALL COORDINATE A TRAFFIC CONTROL PLAN FOR ALL WORK WITHIN THE ROW. ADDITIONAL WARNING SIGNS MAY BE RECOMMENDED BY THE ENGINEER ONCE THE ROADWAYS ARE CONSTRUCTED.
2. CONTRACTOR SHALL MATCH EXISTING PAVEMENT AT TIE-IN. IF EXISTING PAVEMENT ELEVATION DIFFERS SIGNIFICANTLY, CONTRACTOR SHALL NOTIFY THE ENGINEER PRIOR TO CONTINUING WORK.
3. SIDEWALKS SHALL BE CONSTRUCTED 3-FT FROM THE BACK OF CURB FOR ALL LOCATIONS WHERE THE SIDEWALK IS SHOWN OFFSET. REFER TO STREET DETAIL SHEET FOR SIDEWALK AND RAMP DETAILS.
4. NO PERMANENT STRUCTURES HIGHER THAN 3 FEET, AND LOWER THAN 8 FEET ABOVE THE PAVEMENT, INCLUDING STRUCTURES, WALLS, FENCES, AND VEGETATION, SHALL BE CONSTRUCTED OR ALLOWED WITHIN THE CLEAR VISION EASEMENT. CONTRACTOR SHALL GRADE AREAS WITHIN CLEAR VISION EASEMENTS SUCH THAT THE ELEVATION WITHIN THE CLEAR VISION EASEMENT IS NOT HIGHER THAN 3 FEET ABOVE THE ADJACENT TOP OF PAVEMENT.
5. DRIVEWAYS SHOWN ON THIS PLAN ARE FOR THE SOLE PURPOSE OF INDICATING A POTENTIAL CONFLICT WITH CURB RAMP, DRAINAGE INFRASTRUCTURE, OR OTHER CONFLICT. DRIVEWAY LOCATION IS SUBJECT TO CHANGE BASED ON HOME SELECTION AND FINAL LOT DESIGN.
6. CHANGES IN THE SIDEWALK LOCATION FOR A MAXIMUM LINEAR DISTANCE OF TWO HUNDRED (200) FEET ARE PERMITTED TO BE APPROVED BY THE FIELD INSPECTOR WITHOUT AMENDING THE STREET PLAN OR UTILITY LAYOUT PER UDC SECTION 35-506 (Q)(6).
7. THE CONSTRUCTION OF SIDEWALKS ADJACENT TO ALL 900 SERIES LOTS WILL BE THE RESPONSIBILITY OF THE DEVELOPER AS SHOWN ON THE OVERALL SIGNAGE PLAN.

NO.	REVISION	DATE

CALEB M. CHANCE
98401
Caleb
5/29/25

PAPE-DAWSON ENGINEERS
2000 NW LOOP 410 I SAN ANTONIO, TX 78213 I 210.375.9000
TEXAS ENGINEERING FIRM #470 I TEXAS SURVEYING FIRM #10028800

STONEHILL UNITS 2B & 6A
SAN ANTONIO, TEXAS

HANSFORD POINT PLAN & PROFILE
(STA. 6+83.30 TO END)

PLAT NO. 24-11800312
JOB NO. 12456-13
DATE JULY 2024
DESIGNER RA
CHECKED BL DRAWN KC
SHEET C2.02

Date: May 30, 2025, 9:01am User ID: ralvarez
File: P:\124\56\13\Design\Civil\STA1-1245613-HANSFORD POINT.dwg

SCALE: 1"= 50'
0' 50' 100' 150'

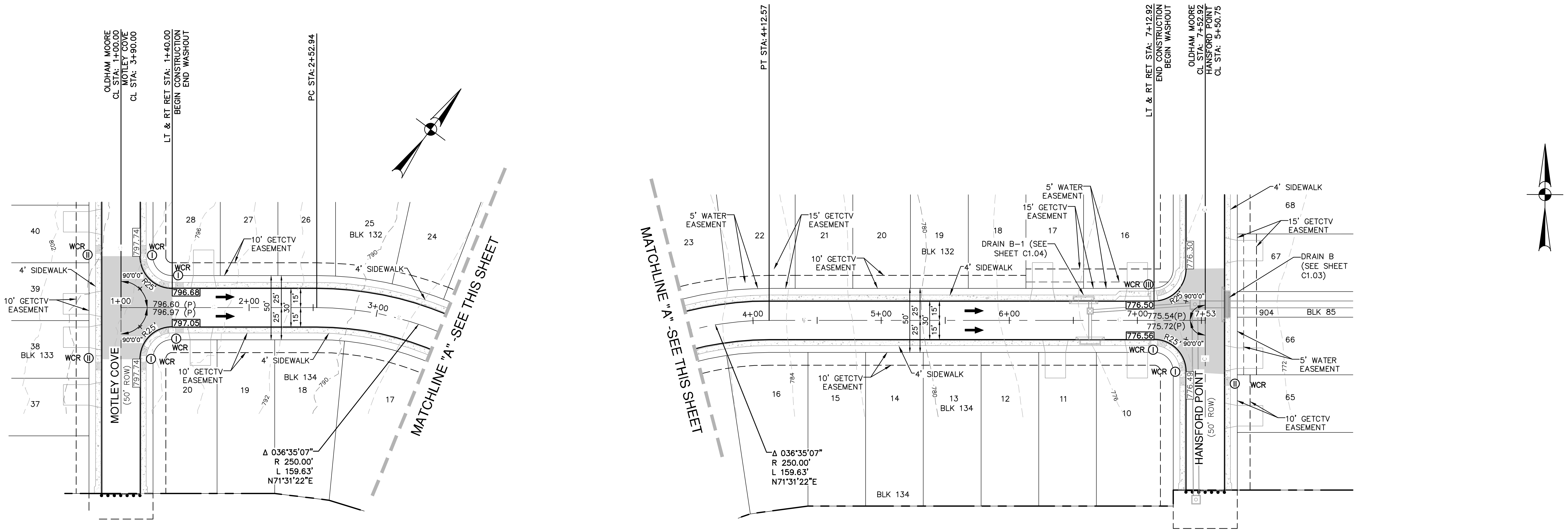
OLDHAM MOORE
CL STA: 1+00.00
MOTLEY COVE
CL STA: 3+90.00
LT & RT RET STA: 1+40.00
BEGIN CONSTRUCTION
END WASHOUT
PC STA:2+52.94
PT STA:4+12.57
LT & RT RET STA: 7+12.92
END CONSTRUCTION
BEGIN WASHOUT
OLDHAM MOORE
CL STA: 7+52.92
HANSFORD POINT
CL STA: 5+50.75
MOTLEY COVE
(50' ROW)
HANSFORD POINT
(50' ROW)
MATCHLINE "A" -SEE THIS SHEET
4' SIDEWALK
10' GETCTV EASEMENT
5' WATER EASEMENT
15' GETCTV EASEMENT
WCR
BLK 132
BLK 133
BLK 134
BLK 85
796.68
796.60 (P)
796.97 (P)
797.05
797.74
776.50
775.54(P)
775.72(P)
776.56
1+00
2+00
3+00
4+00
5+00
6+00
7+00
7+53
Δ 036°35'07"
R 250.00'
L 159.63'
N71°31'22"E
DRAIN B-1 (SEE SHEET C1.04)
DRAIN B (SEE SHEET C1.03)
R25'
90°0'0"
904
40
39
38
37
28
27
26
25
24
20
19
18
17
23
22
21
16
15
14
13
12
11
10
68
67
66
65

OLDHAM MOORE
STA. 1+40.00 TO END

VERTICAL SCALE: 1" = 5'
HORIZONTAL SCALE: 1" = 50'

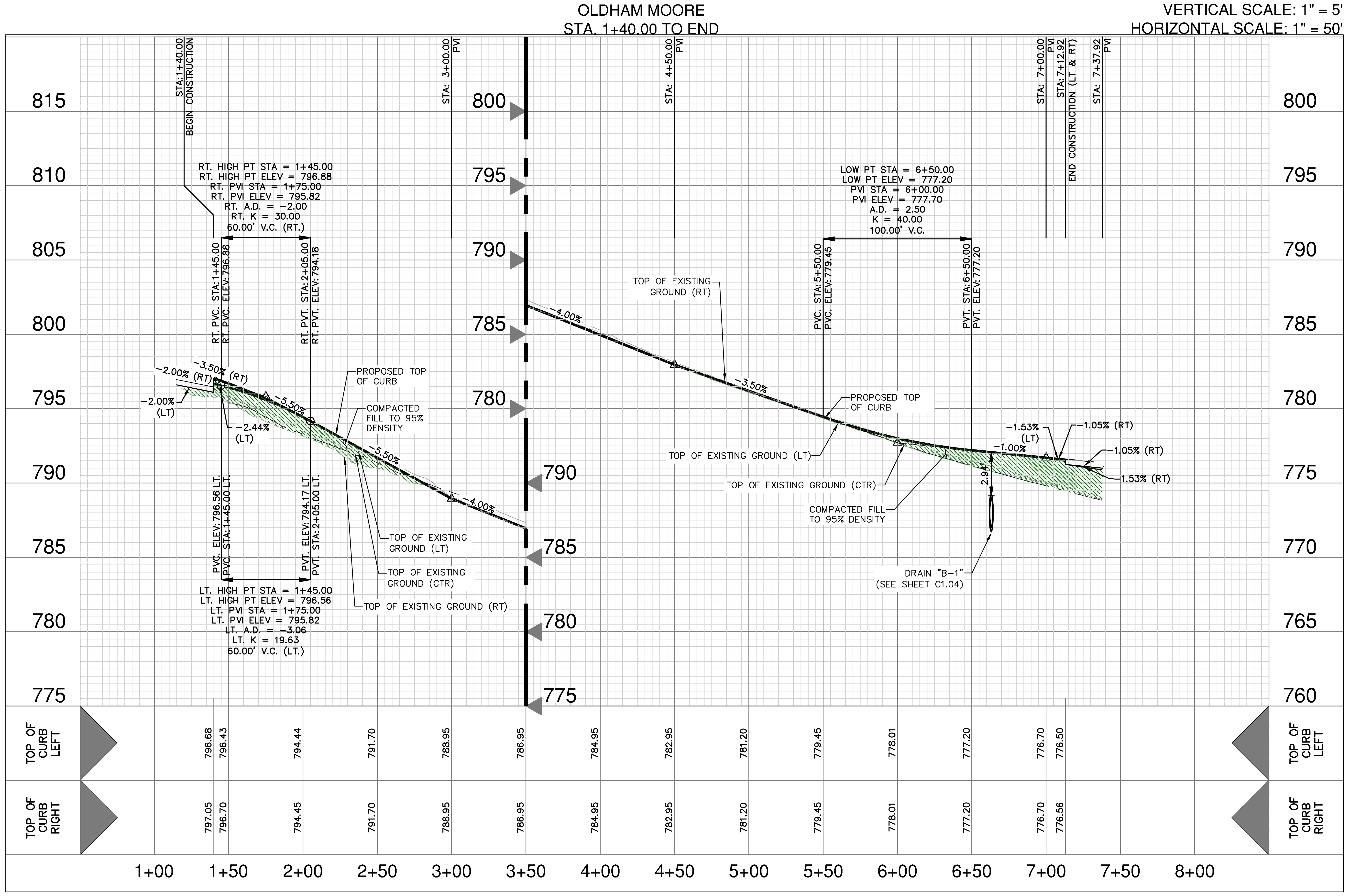
STA:1+40.00
BEGIN CONSTRUCTION
STA: 3+00.00 PVI
STA: 4+50.00 PVI
STA: 7+00.00 PVI
STA: 7+12.92
END CONSTRUCTION (LT & RT)
STA: 7+37.92 PVI
RT. HIGH PT STA = 1+45.00
RT. HIGH PT ELEV = 796.88
RT. PVI STA = 1+75.00
RT. PVI ELEV = 795.82
RT. A.D. = -2.00
RT. K = 30.00
60.00' V.C. (RT.)
RT. PVC. STA:1+45.00
RT. PVC. ELEV: 796.88
RT. PVT. STA:2+05.00
RT. PVT. ELEV: 794.18
LT. HIGH PT STA = 1+45.00
LT. HIGH PT ELEV = 796.56
LT. PVI STA = 1+75.00
LT. PVI ELEV = 795.82
LT. A.D. = -3.06
LT. K = 19.63
60.00' V.C. (LT.)
PVC. ELEV: 796.56 LT.
PVC. STA:1+45.00 LT.
PVT. ELEV: 794.17 LT.
PVT. STA: 2+05.00 LT.
LOW PT STA = 6+50.00
LOW PT ELEV = 777.20
PVI STA = 6+00.00
PVI ELEV = 777.70
A.D. = 2.50
K = 40.00
100.00' V.C.
PVC. STA:5+50.00
PVC. ELEV: 779.45
PVT. STA:6+50.00
PVT. ELEV: 777.20
-2.00% (RT)
-2.00% (LT)
-3.50% (RT)
-2.44% (LT)
-5.50%
-5.50%
-4.00%
-4.00%
-3.50%
-1.53% (LT)
-1.00%
-1.05% (RT)
-1.05% (RT)
-1.53% (RT)
2.94'
PROPOSED TOP OF CURB
COMPACTED FILL TO 95% DENSITY
TOP OF EXISTING GROUND (LT)
TOP OF EXISTING GROUND (CTR)
TOP OF EXISTING GROUND (RT)
TOP OF EXISTING GROUND (RT)
PROPOSED TOP OF CURB
TOP OF EXISTING GROUND (LT)
TOP OF EXISTING GROUND (CTR)
COMPACTED FILL TO 95% DENSITY
DRAIN "B-1" (SEE SHEET C1.04)
815
810
805
800
795
790
785
780
775
800
795
790
785
780
775
770
765
760
TOP OF CURB LEFT
796.68
796.43
794.44
791.70
788.95
786.95
784.95
782.95
781.20
779.45
778.01
777.20
776.70
776.50
TOP OF CURB RIGHT
797.05
796.70
794.45
791.70
788.95
786.95
784.95
782.95
781.20
779.45
778.01
777.20
776.70
776.56
1+00
1+50
2+00
2+50
3+00
3+50
4+00
4+50
5+00
5+50
6+00
6+50
7+00
7+50
8+00

STREET LEGEND

PROJECT LIMITS	——— — — ———
MAINTAIN GUTTER	— → — — → —
EXISTING CONTOUR	— — — 970 — — —
WHEELCHAIR RAMP	①
CENTERLINE	CL
RADIUS POINT	RP
POINT OF CURVATURE	PC
POINT OF TANGENCY	PT
RETURN	RET
DRAINAGE FLOW ARROW	➡
TOP OF CURB SPOT ELEVATION	857.30
PAVEMENT ELEVATION	857.00(P) ×
WASHOUT CROWN SECTION	▨
SIDEWALK (HOMEOWNER'S RESPONSIBILITY)	▨
SIDEWALK (DEVELOPER'S RESPONSIBILITY)	▨
DRIVEWAY	⟋
5'x5' ADA PASSING SPACE	▨
5'x5' ADA PASSING SPACE (DEVELOPER'S RESPONSIBILITY)	▨

STREET NOTES:

1. A BEXAR COUNTY ROW PERMIT MUST BE OBTAINED BEFORE WORKING IN BEXAR COUNTY ROW. CONTRACTOR SHALL COORDINATE A TRAFFIC CONTROL PLAN FOR ALL WORK WITHIN THE ROW. ADDITIONAL WARNING SIGNS MAY BE RECOMMENDED BY THE ENGINEER ONCE THE ROADWAYS ARE CONSTRUCTED.

2. CONTRACTOR SHALL MATCH EXISTING PAVEMENT AT TIE-IN. IF EXISTING PAVEMENT ELEVATION DIFFERS SIGNIFICANTLY, CONTRACTOR SHALL NOTIFY THE ENGINEER PRIOR TO CONTINUING WORK.

3. SIDEWALKS SHALL BE CONSTRUCTED 3-FT FROM THE BACK OF CURB FOR ALL LOCATIONS WHERE THE SIDEWALK IS SHOWN OFFSET. REFER TO STREET DETAIL SHEET FOR SIDEWALK AND RAMP DETAILS.

4. NO PERMANENT STRUCTURES HIGHER THAN 3 FEET, AND LOWER THAN 8 FEET ABOVE THE PAVEMENT, INCLUDING STRUCTURES, WALLS, FENCES, AND VEGETATION, SHALL BE CONSTRUCTED OR ALLOWED WITHIN THE CLEAR VISION EASEMENT. CONTRACTOR SHALL GRADE AREAS WITHIN CLEAR VISION EASEMENTS SUCH THAT THE ELEVATION WITHIN THE CLEAR VISION EASEMENT IS NOT HIGHER THAN 3 FEET ABOVE THE ADJACENT TOP OF PAVEMENT.

5. DRIVEWAYS SHOWN ON THIS PLAN ARE FOR THE SOLE PURPOSE OF INDICATING A POTENTIAL CONFLICT WITH CURB RAMP, DRAINAGE INFRASTRUCTURE, OR OTHER CONFLICT. DRIVEWAY LOCATION IS SUBJECT TO CHANGE BASED ON HOME SELECTION AND FINAL LOT DESIGN.

6. CHANGES IN THE SIDEWALK LOCATION FOR A MAXIMUM LINEAR DISTANCE OF TWO HUNDRED (200) FEET ARE PERMITTED TO BE APPROVED BY THE FIELD INSPECTOR WITHOUT AMENDING THE STREET PLAN OR UTILITY LAYOUT PER UDC SECTION 35-506 (Q)(6).

7. THE CONSTRUCTION OF SIDEWALKS ADJACENT TO ALL 900 SERIES LOTS WILL BE THE RESPONSIBILITY OF THE DEVELOPER AS SHOWN ON THE OVERALL SIGNAGE PLAN.

NO.	REVISION	DATE

CALEB M. CHANCE
98401
Caleb
5/29/25

PAPE-DAWSON ENGINEERS
2000 NW LOOP 410 I SAN ANTONIO, TX 78213 I 210.375.9000
TEXAS ENGINEERING FIRM #470 I TEXAS SURVEYING FIRM #10028800

STONEHILL UNITS 2B & 6A
SAN ANTONIO, TEXAS

OLDHAM MOORE PLAN & PROFILE
(STA. 1+40.00 TO END)

PLAT NO. 24-11800312
JOB NO. 12456-13
DATE JULY 2024
DESIGNER RA
CHECKED BL DRAWN KC
SHEET C2.03

Date: May 30, 2025, 9:01am User ID: ralvarez
File: P:\124\56\13\Design\Civil\STA1-1245613-OLDHAM MOORE.dwg

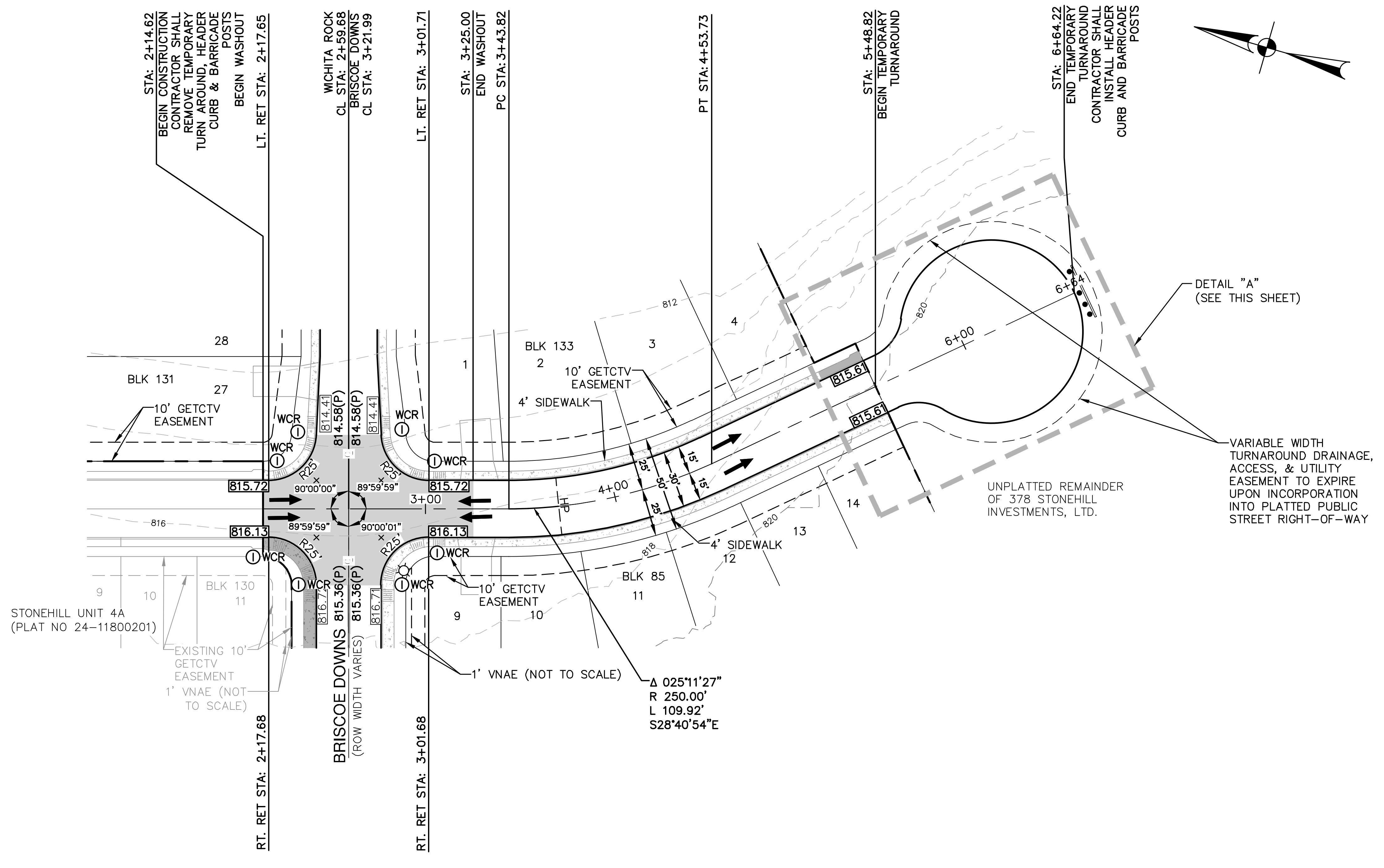
STA: 2+14.62
BEGIN CONSTRUCTION
CONTRACTOR SHALL REMOVE TEMPORARY TURN AROUND, HEADER CURB & BARRICADE POSTS
BEGIN WASHOUT
LT. RET STA: 2+17.65
WICHITA ROCK CL STA: 2+59.68
BRISCOE DOWNS CL STA: 3+21.99
LT. RET STA: 3+01.71
STA: 3+25.00
END WASHOUT
PC STA: 3+43.82
PT STA: 4+53.73
STA: 5+48.82
BEGIN TEMPORARY TURNAROUND
STA: 6+64.22
END TEMPORARY TURNAROUND
CONTRACTOR SHALL INSTALL HEADER CURB AND BARRICADE POSTS
DETAIL "A" (SEE THIS SHEET)
VARIABLE WIDTH TURNAROUND DRAINAGE, ACCESS, & UTILITY EASEMENT TO EXPIRE UPON INCORPORATION INTO PLATTED PUBLIC STREET RIGHT-OF-WAY
UNPLATTED REMAINDER OF 378 STONEHILL INVESTMENTS, LTD.
BLK 131
BLK 133
BLK 130
BLK 85
10' GETCTV EASEMENT
4' SIDEWALK
STONEHILL UNIT 4A (PLAT NO 24-11800201)
EXISTING 10' GETCTV EASEMENT
1' VNAE (NOT TO SCALE)
BRISCOE DOWNS
(ROW WIDTH VARIES)
WCR
815.72
816.13
815.61
814.41
814.58(P)
815.36(P)
816.71
90°00'00"
89°59'59"
90°00'01"
3+00
4+00
6+00
Δ 025°11'27"
R 250.00'
L 109.92'
S28°40'54"E
RT. RET STA: 2+17.68
RT. RET STA: 3+01.68

SCALE: 1" = 50'

0' 50' 100' 150'

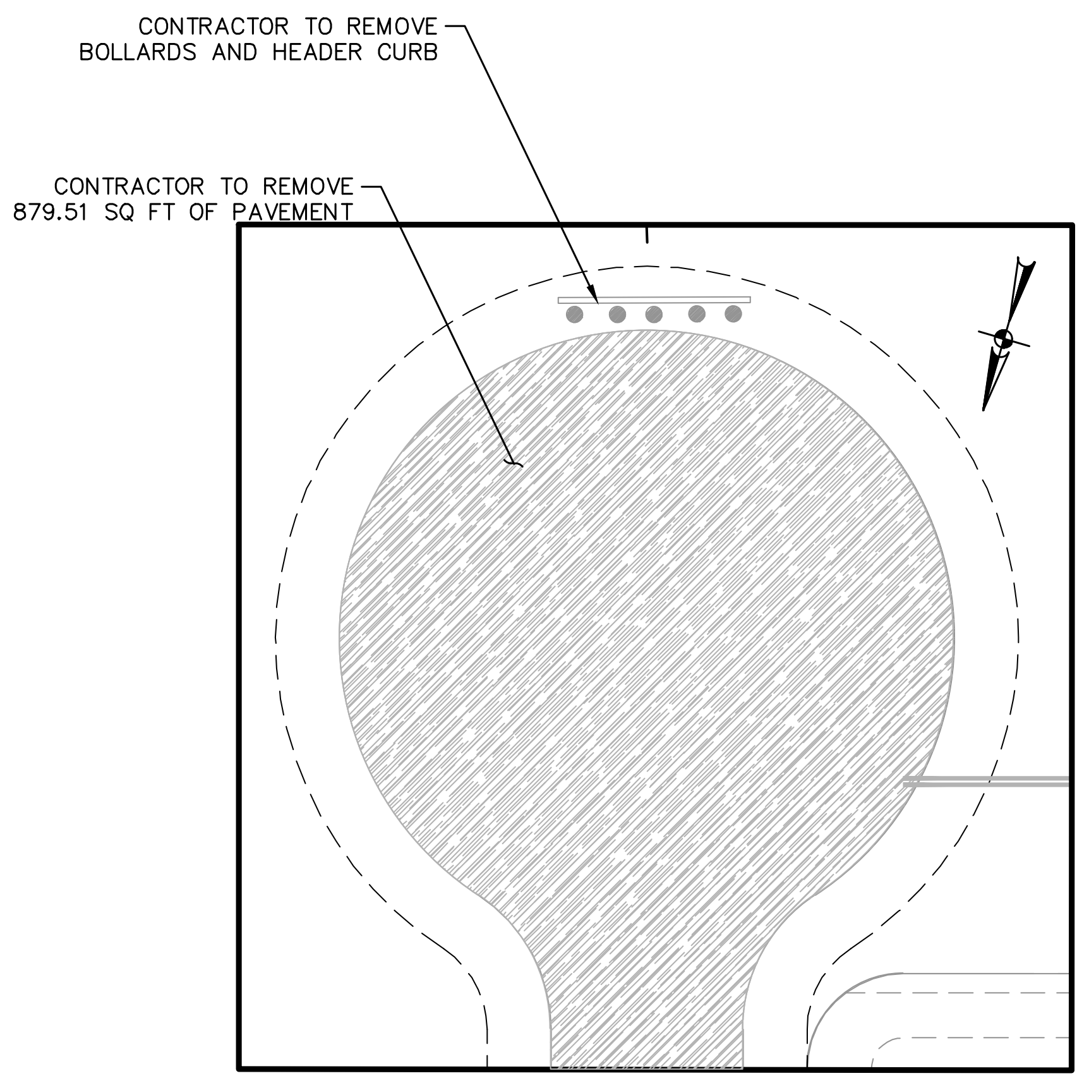
CONTRACTOR TO REMOVE BOLLARDS AND HEADER CURB
CONTRACTOR TO REMOVE 879.51 SQ FT OF PAVEMENT

DEMOLITION DETAIL

SCALE: 1" = 30'

STREET LEGEND

PROJECT LIMITS	——— — — ———
MAINTAIN GUTTER	— → — — → —
EXISTING CONTOUR	— — 970 — —
WHEELCHAIR RAMP	(I)
CENTERLINE	CL
RADIUS POINT	RP
POINT OF CURVATURE	PC
POINT OF TANGENCY	PT
RETURN	RET
DRAINAGE FLOW ARROW	➡
TOP OF CURB SPOT ELEVATION	857.30
EXISTING ELEVATION	857.00(E) ×
PAVEMENT ELEVATION	857.00(P) ×
WASHOUT CROWN SECTION	▨
SIDEWALK (HOMEOWNER'S RESPONSIBILITY)	▨
SIDEWALK (DEVELOPER'S RESPONSIBILITY)	▨
DRIVEWAY	
5'x5' ADA PASSING SPACE	▨
5'x5' ADA PASSING SPACE (DEVELOPER'S RESPONSIBILITY)	▨

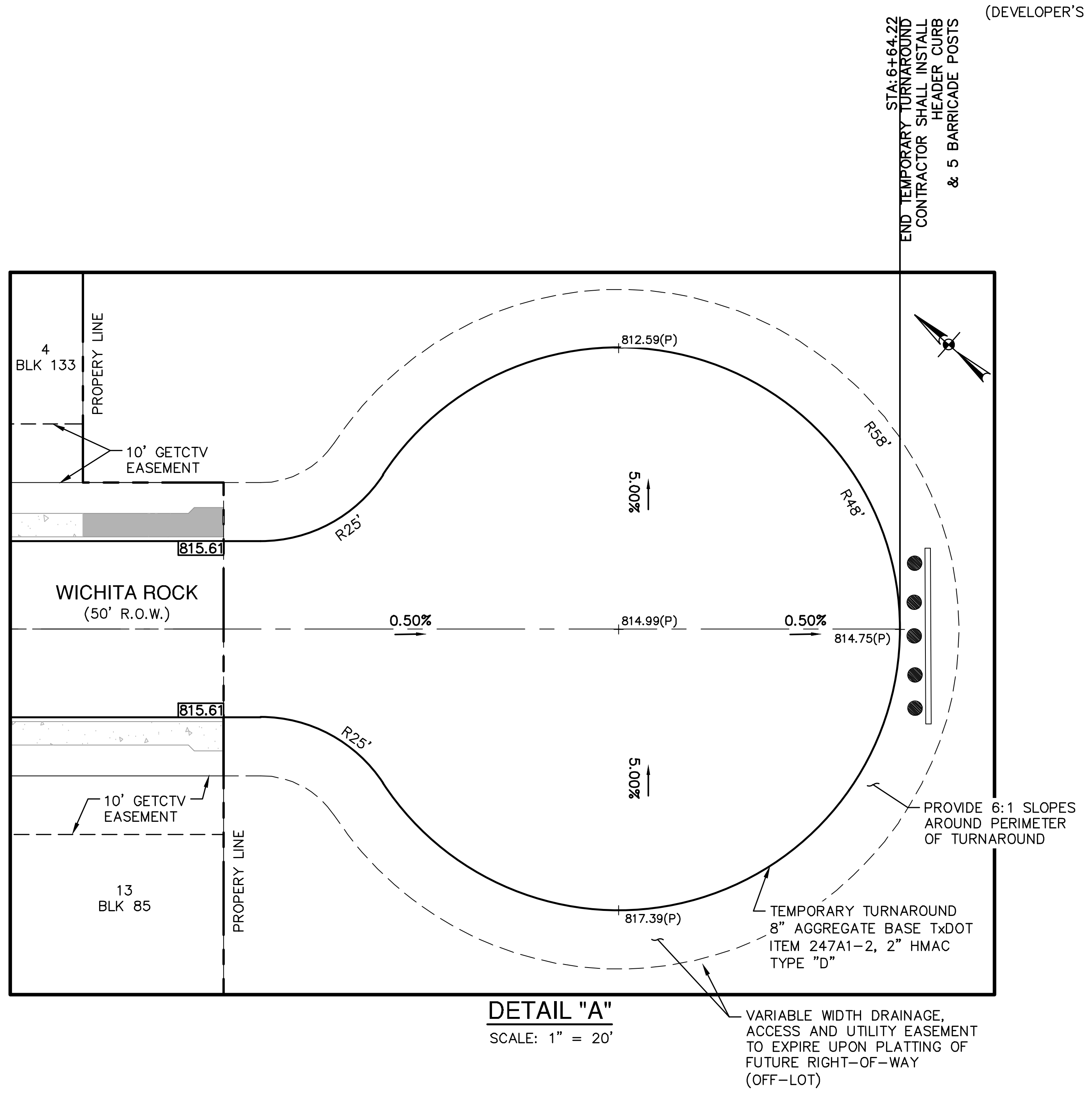
STA: 6+64.22
END TEMPORARY TURNAROUND
CONTRACTOR SHALL INSTALL HEADER CURB & 5 BARRICADE POSTS
4
BLK 133
PROPERY LINE
10' GETCTV EASEMENT
815.61
WICHITA ROCK
(50' R.O.W.)
R25'
R58'
R48'
812.59(P)
5.00%
0.50%
814.99(P)
814.75(P)
817.39(P)
13
BLK 85
PROVIDE 6:1 SLOPES AROUND PERIMETER OF TURNAROUND
TEMPORARY TURNAROUND 8" AGGREGATE BASE TxDOT ITEM 247A1-2, 2" HMAC TYPE "D"
VARIABLE WIDTH DRAINAGE, ACCESS AND UTILITY EASEMENT TO EXPIRE UPON PLATTING OF FUTURE RIGHT-OF-WAY (OFF-LOT)

DETAIL "A"

SCALE: 1" = 20'

WICHITA ROCK
STA. 2+14.62 TO END

VERTICAL SCALE: 1" = 5'
HORIZONTAL SCALE: 1" = 50'

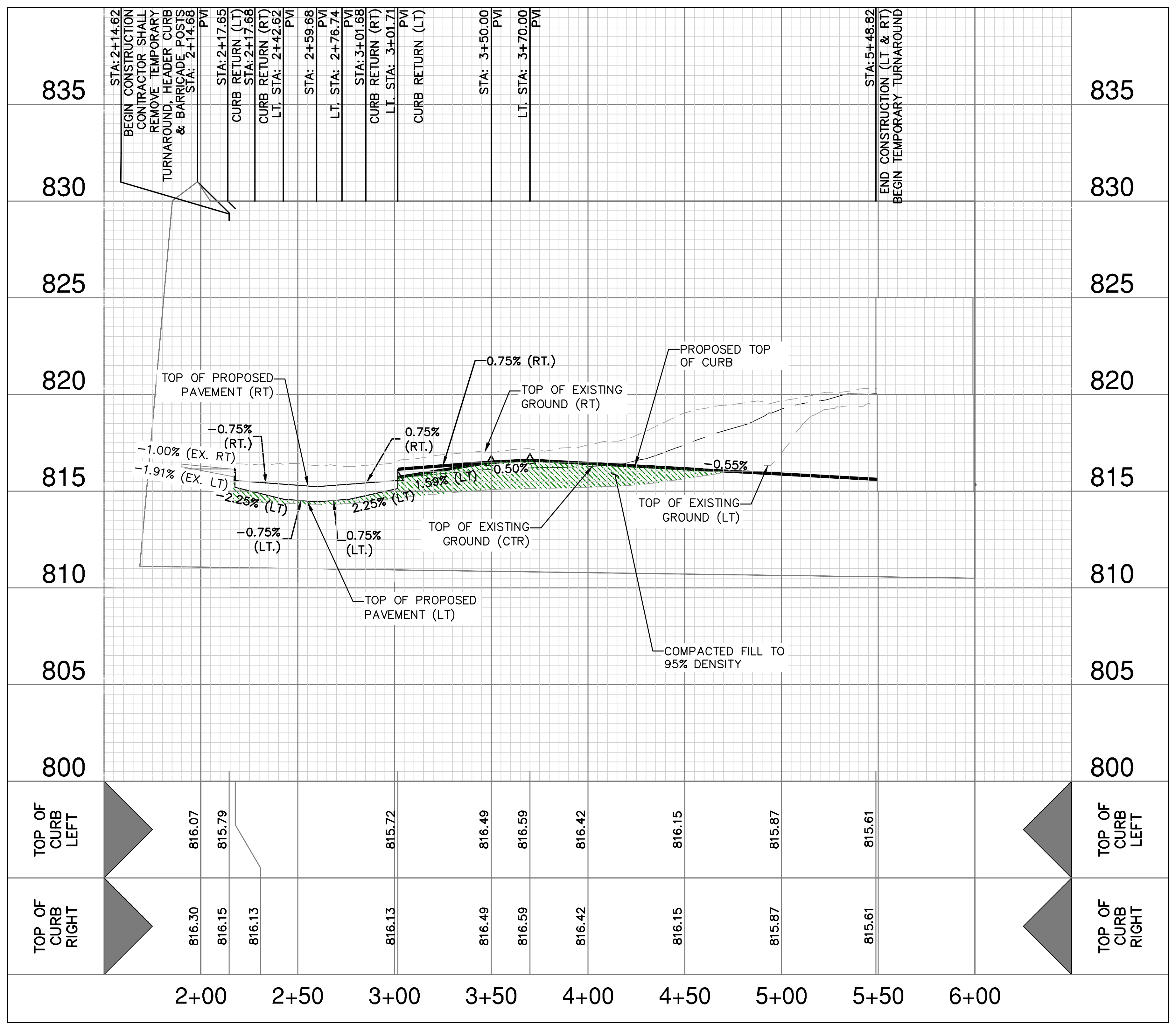

STREET NOTES:

1. A BEXAR COUNTY ROW PERMIT MUST BE OBTAINED BEFORE WORKING IN BEXAR COUNTY ROW. CONTRACTOR SHALL COORDINATE A TRAFFIC CONTROL PLAN FOR ALL WORK WITHIN THE ROW. ADDITIONAL WARNING SIGNS MAY BE RECOMMENDED BY THE ENGINEER ONCE THE ROADWAYS ARE CONSTRUCTED.
2. CONTRACTOR SHALL MATCH EXISTING PAVEMENT AT TIE-IN. IF EXISTING PAVEMENT ELEVATION DIFFERS SIGNIFICANTLY, CONTRACTOR SHALL NOTIFY THE ENGINEER PRIOR TO CONTINUING WORK.
3. SIDEWALKS SHALL BE CONSTRUCTED 3-FT FROM THE BACK OF CURB FOR ALL LOCATIONS WHERE THE SIDEWALK IS SHOWN OFFSET. REFER TO STREET DETAIL SHEET FOR SIDEWALK AND RAMP DETAILS.
4. NO PERMANENT STRUCTURES HIGHER THAN 3 FEET, AND LOWER THAN 8 FEET ABOVE THE PAVEMENT, INCLUDING STRUCTURES, WALLS, FENCES, AND VEGETATION, SHALL BE CONSTRUCTED OR ALLOWED WITHIN THE CLEAR VISION EASEMENT. CONTRACTOR SHALL GRADE AREAS WITHIN CLEAR VISION EASEMENTS SUCH THAT THE ELEVATION WITHIN THE CLEAR VISION EASEMENT IS NOT HIGHER THAN 3 FEET ABOVE THE ADJACENT TOP OF PAVEMENT.
5. DRIVEWAYS SHOWN ON THIS PLAN ARE FOR THE SOLE PURPOSE OF INDICATING A POTENTIAL CONFLICT WITH CURB RAMP, DRAINAGE INFRASTRUCTURE, OR OTHER CONFLICT. DRIVEWAY LOCATION IS SUBJECT TO CHANGE BASED ON HOME SELECTION AND FINAL LOT DESIGN.
6. CHANGES IN THE SIDEWALK LOCATION FOR A MAXIMUM LINEAR DISTANCE OF TWO HUNDRED (200) FEET ARE PERMITTED TO BE APPROVED BY THE FIELD INSPECTOR WITHOUT AMENDING THE STREET PLAN OR UTILITY LAYOUT PER UDC SECTION 35-506 (Q)(6).
7. THE CONSTRUCTION OF SIDEWALKS ADJACENT TO ALL 900 SERIES LOTS WILL BE THE RESPONSIBILITY OF THE DEVELOPER AS SHOWN ON THE OVERALL SIGNAGE PLAN.

NO.	REVISION	DATE

CALEB M. CHANCE
98401
Caleb 5/29/25

PAPE-DAWSON ENGINEERS
2000 NW LOOP 410 I SAN ANTONIO, TX 78213 I 210.375.9000
TEXAS ENGINEERING FIRM #470 I TEXAS SURVEYING FIRM #10028800

STONEHILL UNITS 2B & 6A
SAN ANTONIO, TEXAS

WICHITA ROCK PLAN & PROFILE
(STA. 2+14.62 TO END)

PLAT NO. 24-11800312
JOB NO. 12456-13
DATE JULY 2024
DESIGNER RA
CHECKED BL DRAWN KC
SHEET C2.04

Date: May 30, 2025, 9:02am User ID: ralvarez
File: P:\124\56\13\Design\Civil\STA1-1245613-WICHITA ROCK.dwg

SCALE: 1"= 50'
0' 50' 100' 150'

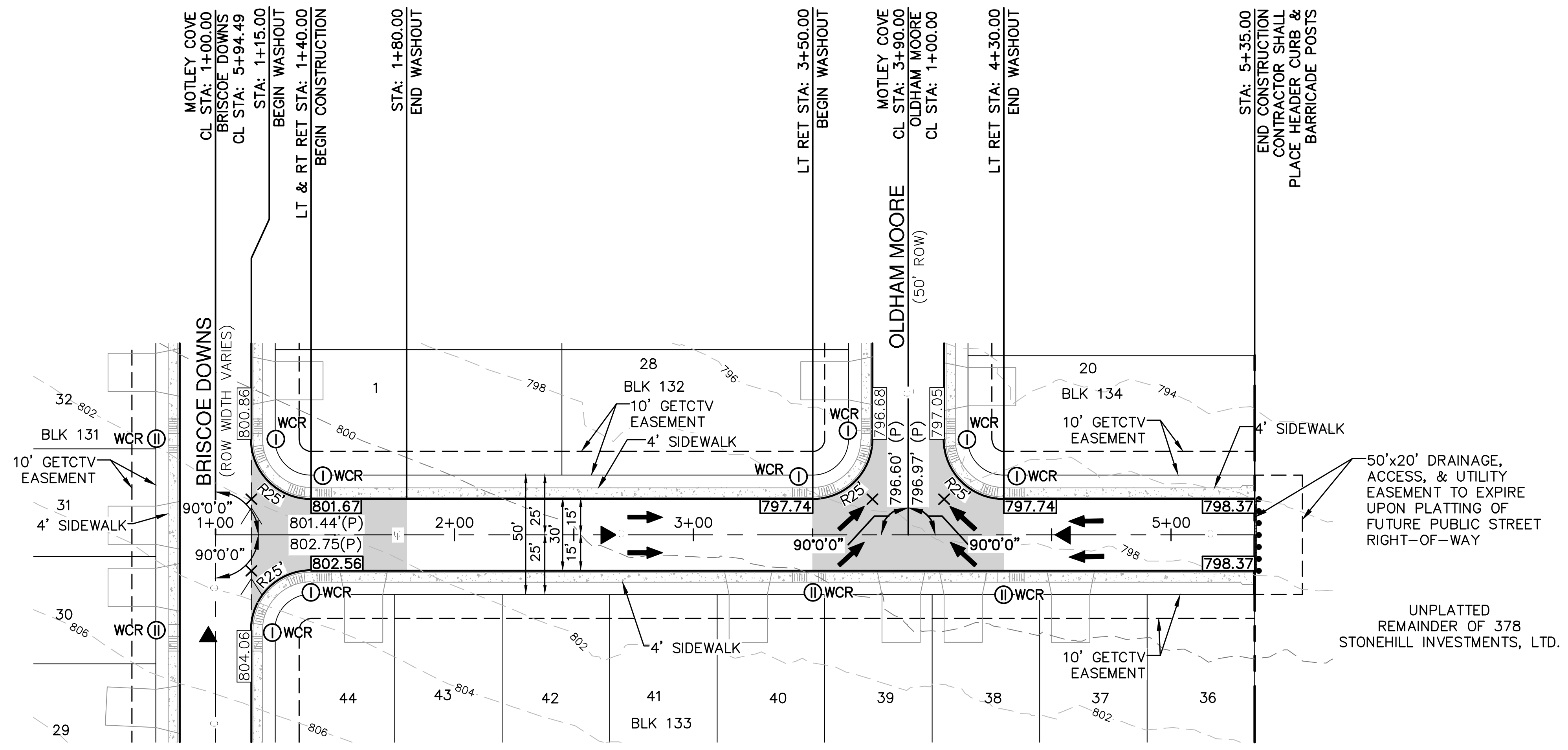
MOTLEY COVE
CL STA: 1+00.00
BRISCOE DOWNS
CL STA: 5+94.49
STA: 1+15.00
BEGIN WASHOUT
LT & RT RET STA: 1+40.00
BEGIN CONSTRUCTION
STA: 1+80.00
END WASHOUT
LT RET STA: 3+50.00
BEGIN WASHOUT
MOTLEY COVE
CL STA: 3+90.00
OLDHAM MOORE
CL STA: 1+00.00
LT RET STA: 4+30.00
END WASHOUT
STA: 5+35.00
END CONSTRUCTION
CONTRACTOR SHALL
PLACE HEADER CURB &
BARRICADE POSTS
BRISCOE DOWNS
(ROW WIDTH VARIES)
OLDHAM MOORE
(50' ROW)
BLK 131
BLK 132
BLK 133
BLK 134
10' GETCTV EASEMENT
4' SIDEWALK
WCR
R25'
90°0'0"
1+00
2+00
3+00
5+00
801.67
801.44'(P)
802.75(P)
802.56
800.86
804.06
797.74
796.68
796.60' (P)
796.97' (P)
797.05
798.37
50'
25'
30'
15'
1
28
20
29
30
31
32
36
37
38
39
40
41
42
43
44
50'x20' DRAINAGE, ACCESS, & UTILITY EASEMENT TO EXPIRE UPON PLATTING OF FUTURE PUBLIC STREET RIGHT-OF-WAY
UNPLATTED REMAINDER OF 378 STONEHILL INVESTMENTS, LTD.

STREET LEGEND

PROJECT LIMITS	——— — — ———
MAINTAIN GUTTER	— → — — → —
EXISTING CONTOUR	– – – 970 – – –
WHEELCHAIR RAMP	(I)
CENTERLINE	CL
RADIUS POINT	RP
POINT OF CURVATURE	PC
POINT OF TANGENCY	PT
RETURN	RET
DRAINAGE FLOW ARROW	➡
TOP OF CURB SPOT ELEVATION	857.30
EXISTING ELEVATION	857.00(E) ×
PAVEMENT ELEVATION	857.00(P) ×
WASHOUT CROWN SECTION	▨
SIDEWALK (HOMEOWNER'S RESPONSIBILITY)	▨
SIDEWALK (DEVELOPER'S RESPONSIBILITY)	▨
DRIVEWAY	
5'x5' ADA PASSING SPACE	▨
5'x5' ADA PASSING SPACE (DEVELOPER'S RESPONSIBILITY)	▨

MOTLEY COVE
STA. 1+40.00 TO END

VERTICAL SCALE: 1" = 5'
HORIZONTAL SCALE: 1" = 50'

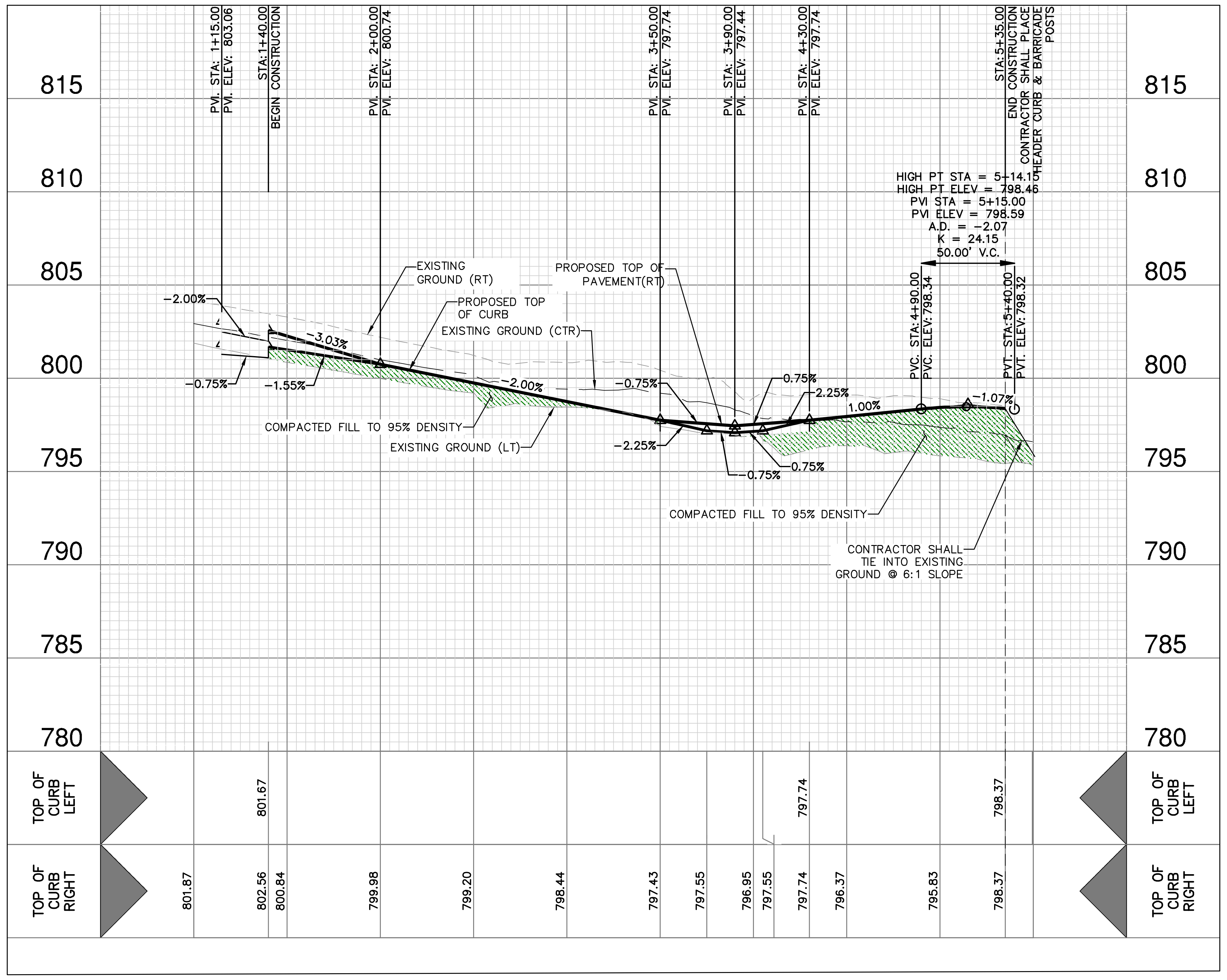
815
810
805
800
795
790
785
780
PVI. STA: 1+15.00
PVI. ELEV: 803.06
STA:1+40.00
BEGIN CONSTRUCTION
PVI. STA: 2+00.00
PVI. ELEV: 800.74
PVI. STA: 3+50.00
PVI. ELEV: 797.74
PVI. STA: 3+90.00
PVI. ELEV: 797.44
PVI. STA: 4+30.00
PVI. ELEV: 797.74
STA:5+35.00
END CONSTRUCTION
CONTRACTOR SHALL PLACE
HEADER CURB & BARRICADE
POSTS
HIGH PT STA = 5+14.15
HIGH PT ELEV = 798.46
PVI STA = 5+15.00
PVI ELEV = 798.59
A.D. = -2.07
K = 24.15
50.00' V.C.
PVC. STA:4+90.00
PVC. ELEV:798.34
PVT. STA:5+40.00
PVT. ELEV:798.32
EXISTING GROUND (RT)
PROPOSED TOP OF PAVEMENT(RT)
PROPOSED TOP OF CURB
EXISTING GROUND (CTR)
EXISTING GROUND (LT)
COMPACTED FILL TO 95% DENSITY
COMPACTED FILL TO 95% DENSITY
CONTRACTOR SHALL TIE INTO EXISTING GROUND @ 6:1 SLOPE
-2.00%
-0.75%
-1.55%
-3.03%
-2.00%
-0.75%
-2.25%
0.75%
-2.25%
-0.75%
0.75%
1.00%
-1.07%
TOP OF CURB LEFT
801.67
797.74
798.37
TOP OF CURB RIGHT
801.87
802.56
800.84
799.98
799.20
798.44
797.43
797.55
796.95
797.55
797.74
796.37
795.83
798.37

STREET NOTES:

1. A BEXAR COUNTY ROW PERMIT MUST BE OBTAINED BEFORE WORKING IN BEXAR COUNTY ROW. CONTRACTOR SHALL COORDINATE A TRAFFIC CONTROL PLAN FOR ALL WORK WITHIN THE ROW. ADDITIONAL WARNING SIGNS MAY BE RECOMMENDED BY THE ENGINEER ONCE THE ROADWAYS ARE CONSTRUCTED.
2. CONTRACTOR SHALL MATCH EXISTING PAVEMENT AT TIE–IN. IF EXISTING PAVEMENT ELEVATION DIFFERS SIGNIFICANTLY, CONTRACTOR SHALL NOTIFY THE ENGINEER PRIOR TO CONTINUING WORK.
3. SIDEWALKS SHALL BE CONSTRUCTED 3–FT FROM THE BACK OF CURB FOR ALL LOCATIONS WHERE THE SIDEWALK IS SHOWN OFFSET. REFER TO STREET DETAIL SHEET FOR SIDEWALK AND RAMP DETAILS.
4. NO PERMANENT STRUCTURES HIGHER THAN 3 FEET, AND LOWER THAN 8 FEET ABOVE THE PAVEMENT, INCLUDING STRUCTURES, WALLS, FENCES, AND VEGETATION, SHALL BE CONSTRUCTED OR ALLOWED WITHIN THE CLEAR VISION EASEMENT. CONTRACTOR SHALL GRADE AREAS WITHIN CLEAR VISION EASEMENTS SUCH THAT THE ELEVATION WITHIN THE CLEAR VISION EASEMENT IS NOT HIGHER THAN 3 FEET ABOVE THE ADJACENT TOP OF PAVEMENT.
5. DRIVEWAYS SHOWN ON THIS PLAN ARE FOR THE SOLE PURPOSE OF INDICATING A POTENTIAL CONFLICT WITH CURB RAMP, DRAINAGE INFRASTRUCTURE, OR OTHER CONFLICT. DRIVEWAY LOCATION IS SUBJECT TO CHANGE BASED ON HOME SELECTION AND FINAL LOT DESIGN.
6. CHANGES IN THE SIDEWALK LOCATION FOR A MAXIMUM LINEAR DISTANCE OF TWO HUNDRED (200) FEET ARE PERMITTED TO BE APPROVED BY THE FIELD INSPECTOR WITHOUT AMENDING THE STREET PLAN OR UTILITY LAYOUT PER UDC SECTION 35–506 (Q)(6).
7. THE CONSTRUCTION OF SIDEWALKS ADJACENT TO ALL 900 SERIES LOTS WILL BE THE RESPONSIBILITY OF THE DEVELOPER AS SHOWN ON THE OVERALL SIGNAGE PLAN.

NO.	REVISION	DATE

CALEB M. CHANCE
98401
Caleb
1/23/25

PAPE-DAWSON ENGINEERS
2000 NW LOOP 410 I SAN ANTONIO, TX 78213 I 210.375.9000
TEXAS ENGINEERING FIRM #470 I TEXAS SURVEYING FIRM #10028800

STONEHILL UNITS 2B & 6A
SAN ANTONIO, TEXAS

MOTLEY COVE PLAN & PROFILE
(STA. 1+40.00 TO END)

PLAT NO. 24-11800312
JOB NO. 12456-13
DATE JULY 2024
DESIGNER RA
CHECKED BL DRAWN KC
SHEET C2.05

Date: Jan 22, 2025, 1:26pm User ID: ralvarez
File: P:\124\56\13\Design\Civil\STA1-1245613-MOTLEY COVE.dwg

GENERAL NOTES:

1. CONTRACTOR SHALL REFERENCE THE PROJECT PAVEMENT DESIGN REPORTS PREPARED BY **INTEC** DATED **01/31/2024 (INTEC PROJECT# S231361) Subsurface Exploration and Pavement Analysis, Proposed New Streets, Stonehill, Units 2B. 4A, 6A, 6B, 8, 9.**
2. CONTRACTOR SHALL RETAIN A GEOTECHNICAL ENGINEER TO VERIFY THE SUB GRADE CONDITION PRIOR TO PLACING ANY BASE MATERIAL. GEOTECHNICAL ENGINEER SHALL DETERMINE THE SUB GRADE CONDITION AND IF LIME STABILIZATION IS REQUIRED.
3. GEOTECHNICAL ENGINEER SHOULD VERIFY THE STREET SUBGRADE AT THE TIME OF CONSTRUCTION PRIOR TO PLACEMENT OF AGGREGATE BASE.
4. THE FLEXIBLE BASE COURSE SHOULD BE CRUSHED LIMESTONE CONFORMING TO TXDOT STANDARD SPECIFICATIONS, ITEM 247, TYPE A, GRADES 1 OR 2.
5. THE MOISTURE CONTENT OF THE FILL SHOULD BE MAINTAINED WITHIN THE RANGE OF OPTIMUM WATER CONTENT TO 3 PERCENTAGE POINTS ABOVE THE OPTIMUM WATER CONTENT UNTIL PERMANENTLY COVERED.
6. IN THE EVENT THAT THE CLAY FILL USED IS DIFFERENT THAN THE EXISTING SUBGRADE, THE RECOMMENDATIONS IN THE GEOTECHNICAL REPORT COULD BE INVALIDATED AND THE DESIGN ENGINEER MUST BE CONSULTED TO DETERMINE IF ADDITIONAL CBR TESTING AND THICKER PAVEMENT SECTIONS ARE REQUIRED.
7. WHERE PAVEMENT SUBGRADE IS LOCATED WITHIN 2-FEET OF THE EXISTING GROUND SURFACE (STRATUM 1 CLAYS), MOISTURE CONDITIONED SUBGRADE WILL BE REQUIRED. GEOTECHNICAL ENGINEER SHOULD VERIFY THE STREET SUBGRADE AT THE TIME OF CONSTRUCTION PRIOR TO PLACEMENT OF AGGREGATE BASE TO DETERMINE WHERE THE MOISTURE CONDITIONED SUBGRADE IS NEEDED. REFERENCE GEOTECHNICAL ENGINEERING REPORT FOR MORE INFORMATION.
8. THE CONTRACTOR IS RESPONSIBLE FOR COORDINATING ALL MATERIAL TESTING WITH THE PROJECT GEOTECHNICAL ENGINEER. TESTING SHALL BE PAID FOR BY THE OWNER.
9. FILL MATERIAL SHOULD BE NATIVE ON-SITE MATERIAL, FREE OF DELETERIOUS MATERIAL WITH A MINIMUM CBR VALUE OF 2 AND A PI WITHIN RANGE OF 5 AND 60. THE GRAVEL SIZE SHOULD NOT EXCEED 3 INCHES IN DIAMETER. LIME OR CEMENT APPLICATION RATES SHOULD BE RE-EVALUATED FOR THE FILL MATERIAL. THE MATERIAL SHOULD BE PLACED AS PER APPLICABLE CITY OR COUNTY GUIDELINES. CONTRACTOR TO VERIFY EXACT SPECIFICATIONS WITH PROJECT GEOTECHNICAL ENGINEERING REPORT.
10. A BEXAR COUNTY PERMIT MUST BE OBTAINED BEFORE WORKING IN THE BEXAR COUNTY ROW. CONTRACTOR SHALL COORDINATE A TRAFFIC CONTROL PLAN FOR ALL WORK WITHIN THE ROW. ADDITIONAL WARNING SIGNS MAY BE RECOMMENDED BY THE ENGINEER ONCE THE ROADWAYS ARE CONSTRUCTED.

STREET SUBGRADE NOTES:

1. CUT AND FILL DATA ARE NOT AVAILABLE AT THIS TIME
2. FILL USED TO RAISE THE GRADE:
   - APPROVED FILL MATERIAL FREE SHOULD HAVE A MINIMUM CBR VALUE OF 2.0 AND A MAXIMUM PLASTICITY INDEX VALUE OF 60 (ON SITE MATERIAL). LIME APPLICATION RATES SHOULD BE RE-EVALUATED AND TESTED FOR SULFATE CONTENT PRIOR TO USE OF THE FILL MATERIAL.
   - THE FILL MATERIAL SHOULD BE APPROVED BY THE GEOTECHNICAL ENGINEER, FREE OF DELETERIOUS MATERIAL, AND THE GRAVEL SIZE SHOULD NOT EXCEED 3 INCHES IN SIZE. THE MATERIAL SHOULD BE PLACED AND COMPACTED AS PER APPLICABLE CITY / COUNTY GUIDELINES.
   - THE SUBGRADE, PRIOR TO PLACEMENT OF FILL, SHOULD BE PROOF ROLLED TO IDENTIFY WEAK AREAS. ANY IDENTIFIED WEAK AREAS SHOULD BE RECOMPACTED.
3. BASED ON THE THICKNESS OF THE CLAYS ENCOUNTERED IN THE BORINGS, WE ANTICIPATE THE FINAL PAVEMENT SUBGRADE PLASTICITY INDEX VALUE TO BE GREATHER THAN 20. AS PER BEXAR COUINTY/CITY OF SAN ANTONIO REQUIREMENTS, SUBGRADE STABILIZATION IS NEEDED WHEN THE PLASTICITY INDEX VALUES ARE GREATER THAN 20.
4. IF THE SUBGRADE PLASTICITY INDEX VALUES ARE LESS THAN OR EQUAL TO 20, AS PER CITY OF SAN ANTONIO OR BEXAR COUNTY REQUIREMENTS, SUBGRADE STABILIZATION IS NOT NEEDED.
5. IF THE FINAL STREET SUBGRADE PLASTICITY INDEX VALUES ARE GREATER THAN 20, THEN THE SUBGRADE SHOULD BE STABILIZED.
   - STABILIZE THE SUBGRADE:
     - STABILIZED TO A DEPTH OF **8** INCHES USING **8** PERCENT LIME CONTENT.
     - THE SUBGRADE SOILS SHOULD BE TESTED FOR SOIL SULFATE CONTENT PRIOR TO STABILIZATION. IF THE SOIL SULFATE CONTENT IS HIGHER THAN 3000 PPM, AN ALTERNATE PROCEDURE WILL BE NEEDED.
     - LIME APPLICATION RATE OF **45.5** LBS PER SQ YARD FOR **8**-INCH DEPTH OF STABILIZATION IS RECOMMENDED.

LIME NOTES:

FOR LIME STABILIZATION CONSTRUCTION VERIFICATION THE FOLLOWING SHALL BE CONDUCTED ON THE FIELD:

1. AFTER INITIAL MIXING THE SOIL-LIME MIXTURE SHALL MELLOW FOR A PERIOD OF TWO TO THREE (2-3) DAYS. MAINTAIN MOISTURE DURING MELLOWING.
2. AFTER MELLOWING AND FINAL MIXING, THE PULVERIZATION SHALL BE CHECKED USING THE FOLLOWING CRITERIA (REMOVE NON-SLAKING AGGREGATES RETAINED ON THE $\frac{3}{4}$ INCH SIEVE FROM THE SAMPLE):

• MINIMUM PASSING $1\frac{3}{4}$" SIEVE	100
• MINIMUM PASSING $\frac{3}{4}$" SIEVE	85
• MINIMUM PASSING NO. 4 SIEVE	60

3. SAMPLE SOIL-LIME MIXTURE FOR DETERMINATION OF MAXIMUM DRY DENSITY (MDD). IN THE LABORATORY, MOLD SPECIMENS TO 95% OF MDD AT OPTIMUM MOISTURE CONTENT AND VERIFY UCS TO BE AT LEAST 160 PSI IN ACCORDANCE WITH PROCEDURE OUTLINED IN THE BEXAR COUNTY FLEXIBLE PAVEMENT DESIGN CRITERIA GUIDE FOR MIXTURE DESIGN.
4. COMPACT AND CHECK FIELD DENSITY (MINIMUM OF 95% OF MDD REQUIRED).
5. CURE FOR AN ADDITIONAL 2 TO 5 DAYS (TOTAL MELLOWING AND CURING TIME SHOULD TOTAL AT LEAST 5 DAYS).
6. VERIFY DEPTH OF LIME STABILIZED LAYER TO DEPTH AS NOTED ON PLAN TO WITHIN +/- 1.0 INCH.

PAVEMENT SECTION DETAIL

STREET NAME	STATION	TYPE "D" HMAC	TYPE "C" HMAC	TYPE "B" HMAC	CRUSHED LIMESTONE BASE	STABILIZED SUBGRADE	GEOGRID (TENSAR TRIAX TX5)	CBR	STRUCTURAL NUMBER
BRISCOE DOWNS	1+91.34 TO 4+02.01	1.5"	2.5"	*	18.5"	8"	NO	2	4.99
BRISCOE DOWNS	4+02.01 TO END	2"	*	*	10"	8"	NO	2	2.92
HANDSFORD POINT	1+18.30 TO 2+33.22	2"	*	*	10"	8"	NO	2	2.92
HANDSFORD POINT (MODIFIED PAVEMENT)	2+33.22 TO 2+73.22	2"	*	5"	*	10"	NO	2	2.92
HANSFORD POINT	2+73.22 TO 5+18.26	2"	*	*	10"	8"	NO	2	2.92
HANDSFORD POINT (MODIFIED PAVEMENT)	5+18.26 TO 5+58.26	2"	*	5"	*	10"	NO	2	3.22
HANSFORD POINT	5+58.26 TO END	2"	*	*	10"	8"	NO	2	2.92
OLDHAM MOORE	1+40.00 TO END	2"	*	*	10"	8"	NO	2	2.92
WICHITA ROCK	2+14.62 TO END	2"	*	*	10"	8"	NO	2	2.92
MOTLEY COVE	1+40.00 TO END	2"	*	*	10"	8"	NO	2	2.92

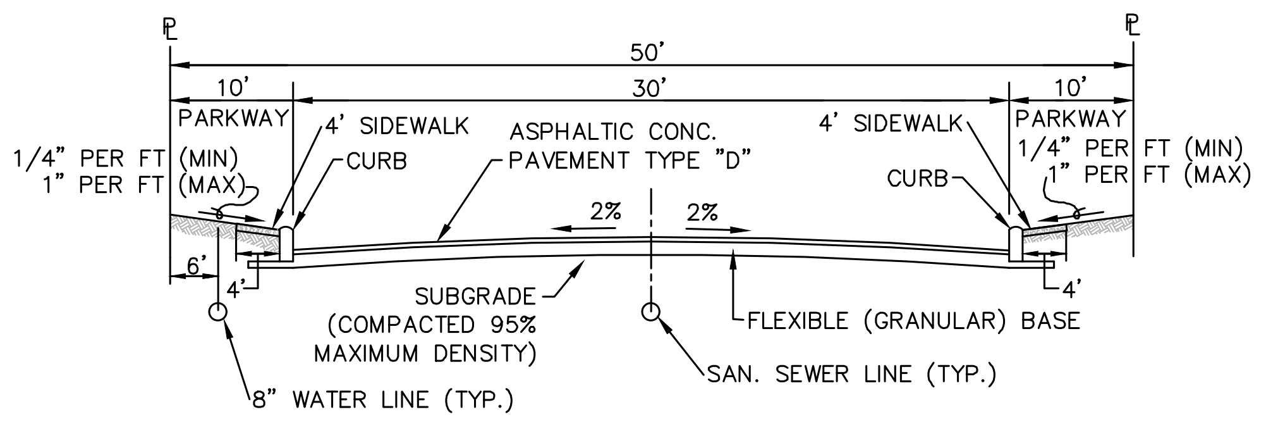
PL
PL
50'
10'
30'
10'
PARKWAY
PARKWAY
4' SIDEWALK
4' SIDEWALK
ASPHALTIC CONC. PAVEMENT TYPE "D"
1/4" PER FT (MIN)
1" PER FT (MAX)
CURB
CURB
2%
2%
6'
4'
4'
SUBGRADE (COMPACTED 95% MAXIMUM DENSITY)
FLEXIBLE (GRANULAR) BASE
SAN. SEWER LINE (TYP.)
8" WATER LINE (TYP.)

50' (LOCAL TYPE "A") STREET SECTION

NOT-TO-SCALE

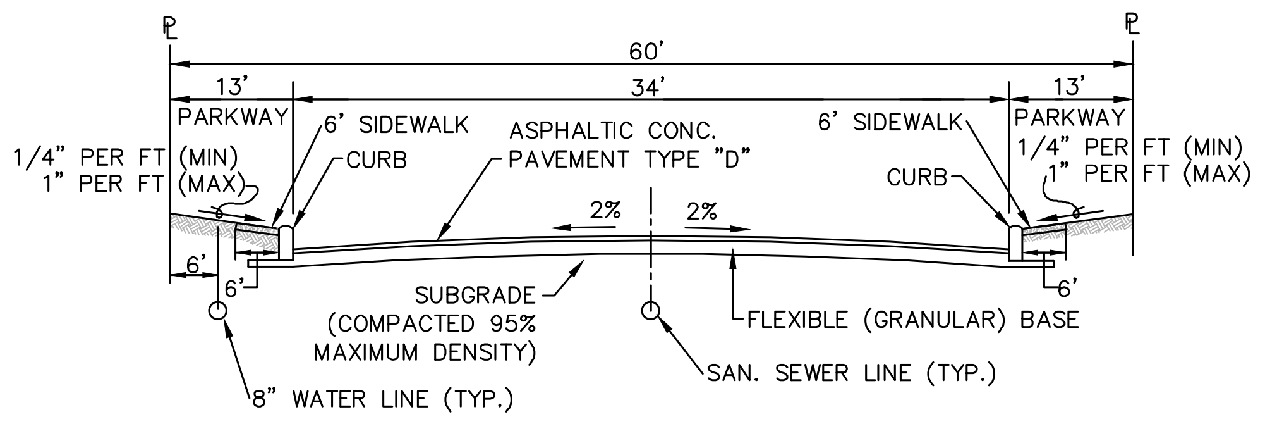
PL
PL
60'
13'
34'
13'
PARKWAY
PARKWAY
6' SIDEWALK
6' SIDEWALK
ASPHALTIC CONC. PAVEMENT TYPE "D"
1/4" PER FT (MIN)
1" PER FT (MAX)
CURB
CURB
2%
2%
6'
6'
6'
SUBGRADE (COMPACTED 95% MAXIMUM DENSITY)
FLEXIBLE (GRANULAR) BASE
SAN. SEWER LINE (TYP.)
8" WATER LINE (TYP.)

60' (LOCAL TYPE "B") ROW STREET SECTION

NOT-TO-SCALE

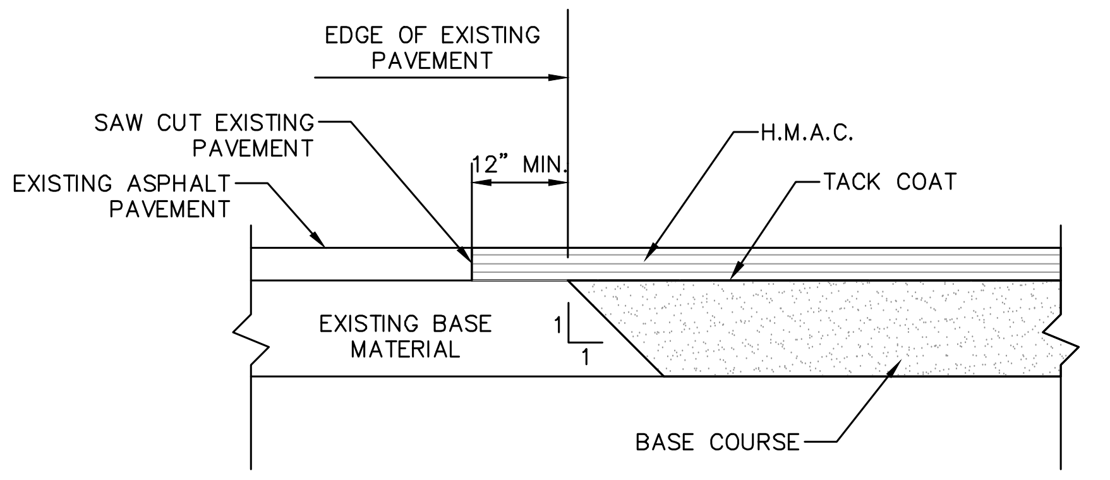
EDGE OF EXISTING PAVEMENT
SAW CUT EXISTING PAVEMENT
EXISTING ASPHALT PAVEMENT
12" MIN.
H.M.A.C.
TACK COAT
EXISTING BASE MATERIAL
1
1
BASE COURSE

ASPHALT/ASPHALT JUNCTURE DETAIL

NOT-TO-SCALE

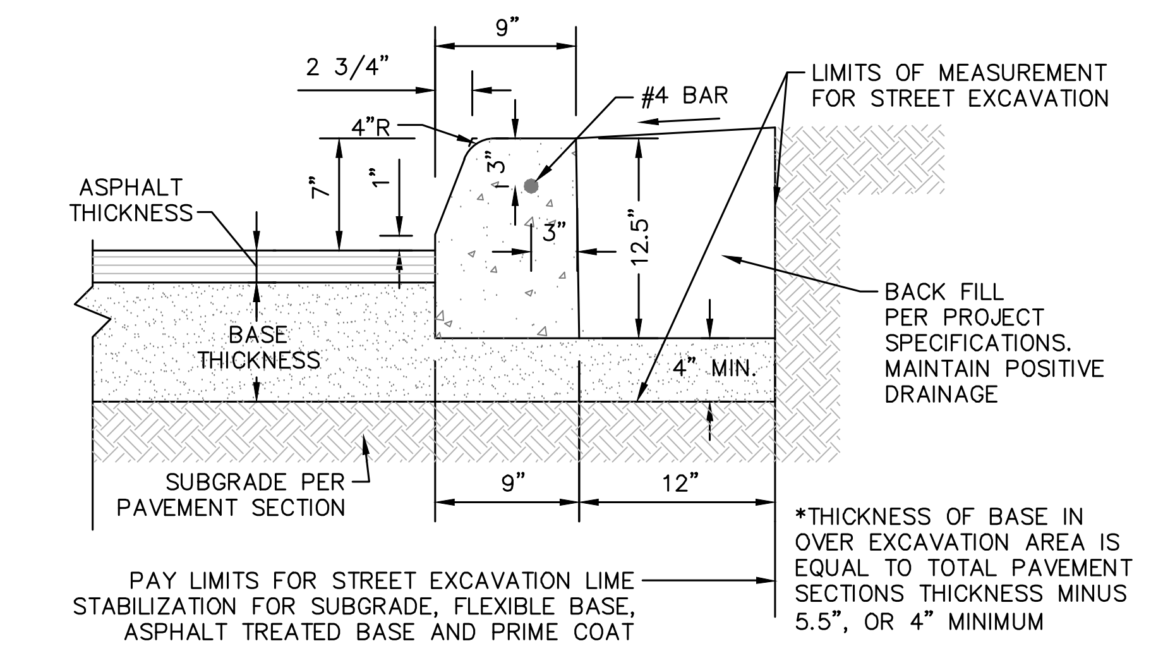
9"
2 3/4"
4"R
#4 BAR
LIMITS OF MEASUREMENT FOR STREET EXCAVATION
ASPHALT THICKNESS
7"
1"
3"
3"
12.5"
BASE THICKNESS
BACK FILL PER PROJECT SPECIFICATIONS. MAINTAIN POSITIVE DRAINAGE
4" MIN.
SUBGRADE PER PAVEMENT SECTION
9"
12"
*THICKNESS OF BASE IN OVER EXCAVATION AREA IS EQUAL TO TOTAL PAVEMENT SECTIONS THICKNESS MINUS 5.5", OR 4" MINIMUM
PAY LIMITS FOR STREET EXCAVATION LIME STABILIZATION FOR SUBGRADE, FLEXIBLE BASE, ASPHALT TREATED BASE AND PRIME COAT

CONCRETE CURB DETAIL

NOT-TO-SCALE

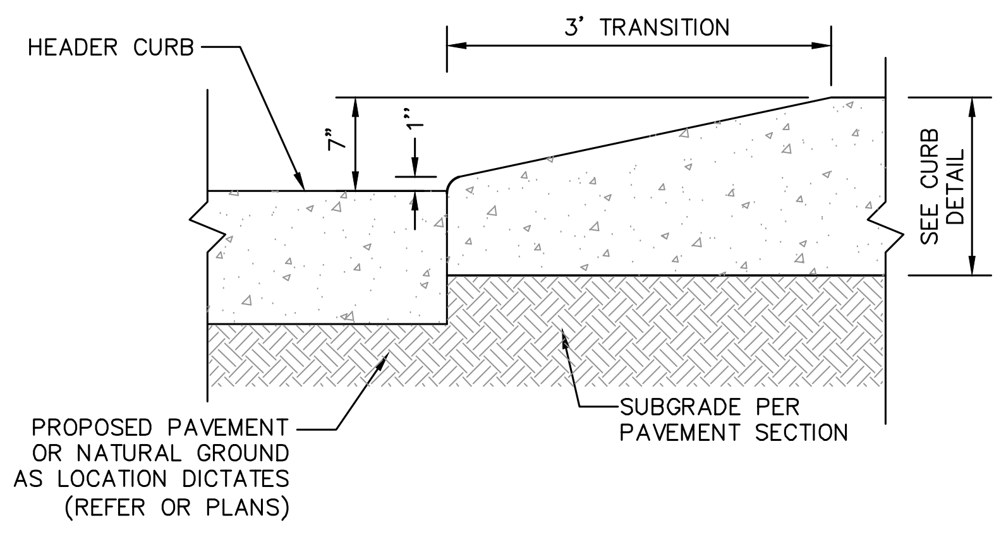
HEADER CURB
3' TRANSITION
7"
1"
SEE CURB DETAIL
PROPOSED PAVEMENT OR NATURAL GROUND AS LOCATION DICTATES (REFER OR PLANS)
SUBGRADE PER PAVEMENT SECTION

CURB TRANSITION DETAIL
(FROM HEADER CURB TO STANDARD CURB

NOT-TO-SCALE

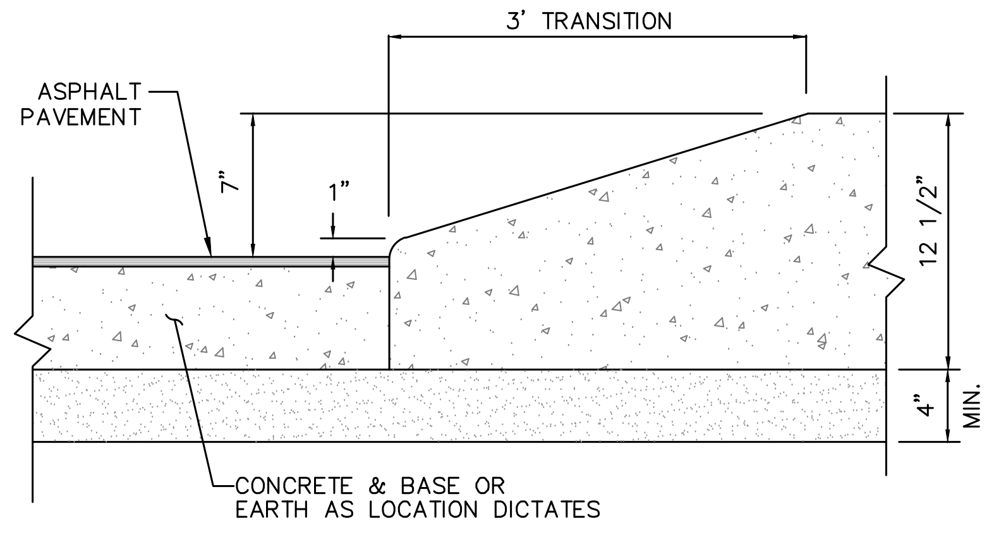
3' TRANSITION
ASPHALT PAVEMENT
7"
1"
12 1/2"
4" MIN.
CONCRETE & BASE OR EARTH AS LOCATION DICTATES

CURB TRANSITION DETAIL
(FROM PAVEMENT TO STANDARD CURB)

NOT-TO-SCALE

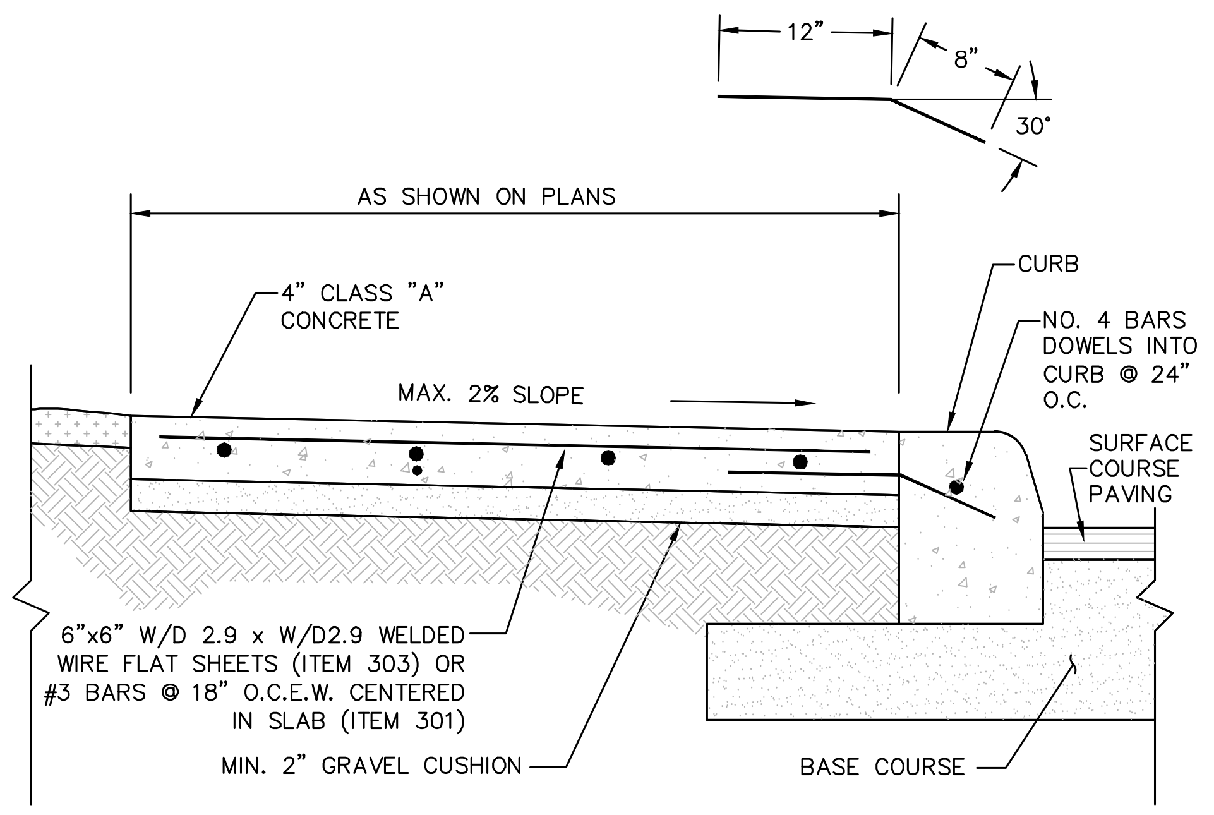
12"
8"
30°
AS SHOWN ON PLANS
CURB
4" CLASS "A" CONCRETE
NO. 4 BARS DOWELS INTO CURB @ 24" O.C.
MAX. 2% SLOPE
SURFACE COURSE PAVING
6"x6" W/D 2.9 x W/D2.9 WELDED WIRE FLAT SHEETS (ITEM 303) OR #3 BARS @ 18" O.C.E.W. CENTERED IN SLAB (ITEM 301)
MIN. 2" GRAVEL CUSHION
BASE COURSE

SIDEWALK DETAIL

NOT-TO-SCALE

NO.	REVISION	DATE

CALEB M. CHANCE
98401

5/29/25

PAPE-DAWSON ENGINEERS
2000 NW LOOP 410 I SAN ANTONIO, TX 78213 I 210.375.9000
TEXAS ENGINEERING FIRM #470 I TEXAS SURVEYING FIRM #10028800

STONEHILL UNITS 2B & 6A
SAN ANTONIO, TEXAS
STREET DETAILS

PLAT NO. 24-11800312
JOB NO. 12456-13
DATE JULY 2024
DESIGNER RA
CHECKED BL DRAWN EG
SHEET C2.10

Date: May 30, 2025, 9:02am User ID: ralvarez
File: P:\124\56\13\Design\Civil\STDT-1245613.dwg

DISCLAIMER:
The use of this standard is governed by the "Texas Engineering Practice Act". No warranty of any kind is made by TxDOT for any purpose whatsoever. TxDOT assumes no responsibility for the conversion of this standard to other formats or for incorrect results or damages resulting from its use.

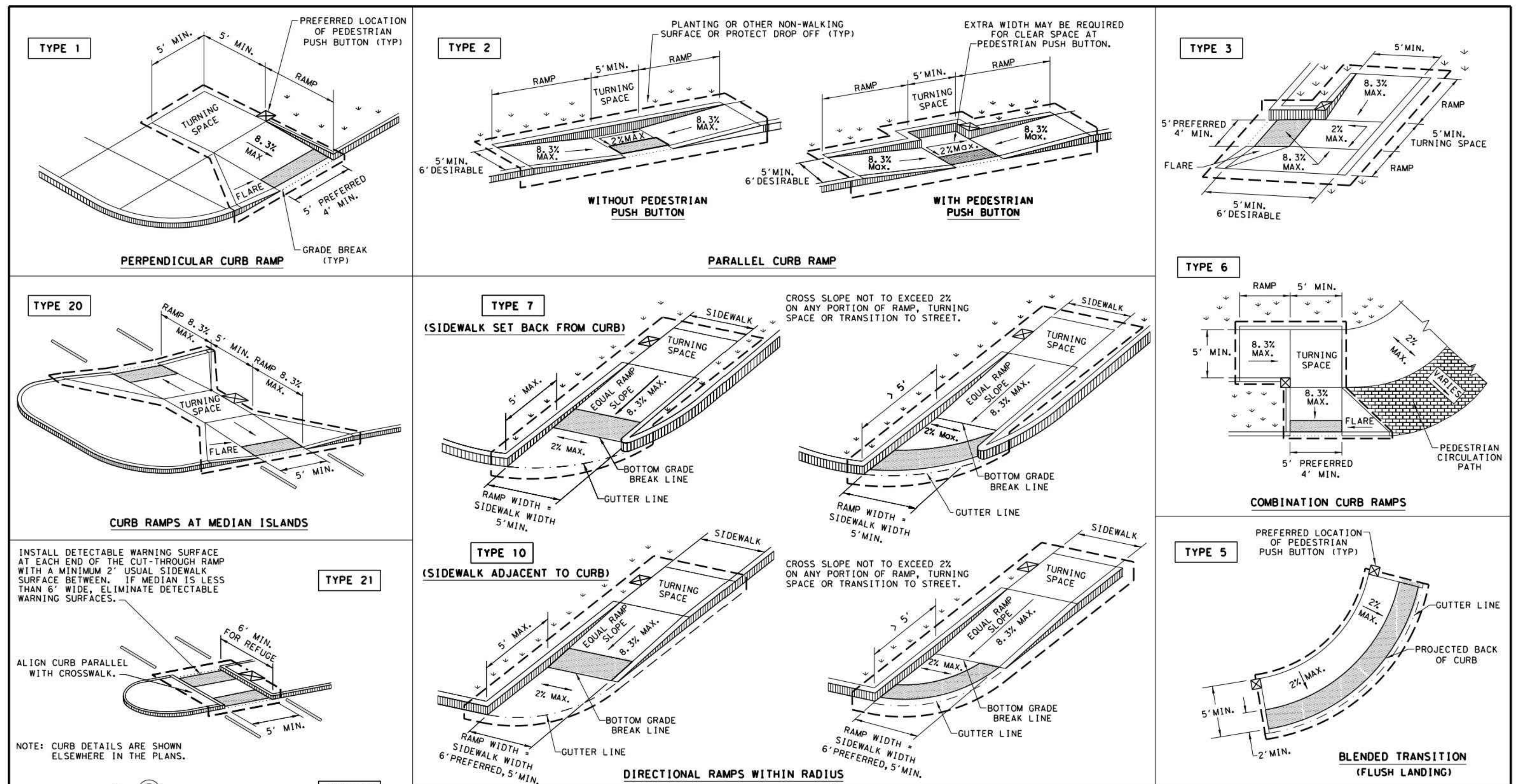
TYPE 1
PREFERRED LOCATION OF PEDESTRIAN PUSH BUTTON (TYP)
5' MIN.
RAMP
TURNING SPACE
8.3% MAX.
FLARE
5' PREFERRED 4' MIN.
GRADE BREAK (TYP)
PERPENDICULAR CURB RAMP
TYPE 2
PLANTING OR OTHER NON-WALKING SURFACE OR PROTECT DROP OFF (TYP)
EXTRA WIDTH MAY BE REQUIRED FOR CLEAR SPACE AT PEDESTRIAN PUSH BUTTON.
5' MIN. 6' DESIRABLE
2% MAX.
WITHOUT PEDESTRIAN PUSH BUTTON
WITH PEDESTRIAN PUSH BUTTON
PARALLEL CURB RAMP
TYPE 3
5' PREFERRED 4' MIN.
5' MIN. TURNING SPACE
TYPE 20
CURB RAMPS AT MEDIAN ISLANDS
TYPE 7
(SIDEWALK SET BACK FROM CURB)
CROSS SLOPE NOT TO EXCEED 2% ON ANY PORTION OF RAMP, TURNING SPACE OR TRANSITION TO STREET.
SIDEWALK
EQUAL SLOPE
BOTTOM GRADE BREAK LINE
GUTTER LINE
RAMP WIDTH = SIDEWALK WIDTH 5' MIN.
TYPE 6
COMBINATION CURB RAMPS
PEDESTRIAN CIRCULATION PATH
TYPE 21
INSTALL DETECTABLE WARNING SURFACE AT EACH END OF THE CUT-THROUGH RAMP WITH A MINIMUM 2' USUAL SIDEWALK SURFACE BETWEEN. IF MEDIAN IS LESS THAN 6' WIDE, ELIMINATE DETECTABLE WARNING SURFACES.
ALIGN CURB PARALLEL WITH CROSSWALK.
6' MIN. FOR REFUGE
NOTE: CURB DETAILS ARE SHOWN ELSEWHERE IN THE PLANS.
TYPE 10
(SIDEWALK ADJACENT TO CURB)
RAMP WIDTH = SIDEWALK WIDTH 6' PREFERRED, 5' MIN.
DIRECTIONAL RAMPS WITHIN RADIUS
TYPE 5
PREFERRED LOCATION OF PEDESTRIAN PUSH BUTTON (TYP)
GUTTER LINE
PROJECTED BACK OF CURB
2' MIN.
BLENDED TRANSITION
(FLUSH LANDING)

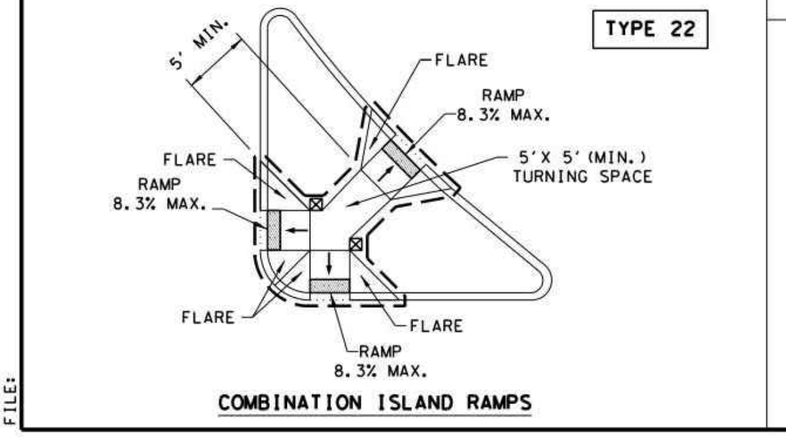
TYPE 22
FLARE
RAMP 8.3% MAX.
5'X 5' (MIN.) TURNING SPACE
COMBINATION ISLAND RAMPS

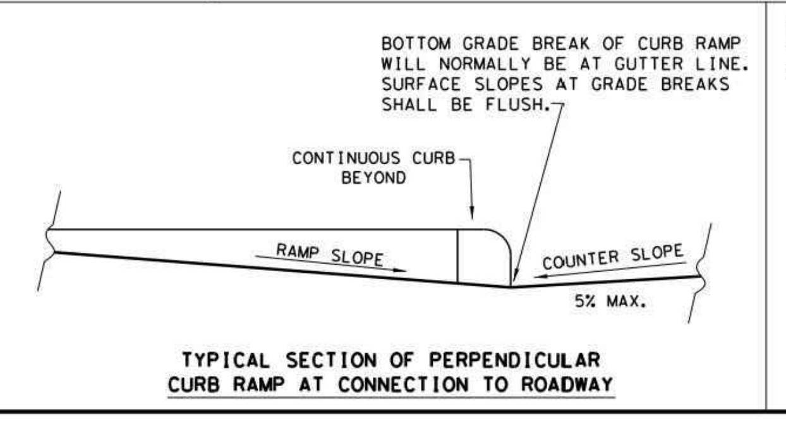
BOTTOM GRADE BREAK OF CURB RAMP WILL NORMALLY BE AT GUTTER LINE. SURFACE SLOPES AT GRADE BREAKS SHALL BE FLUSH.
CONTINUOUS CURB BEYOND
RAMP SLOPE
COUNTER SLOPE
5% MAX.

TYPICAL SECTION OF PERPENDICULAR CURB RAMP AT CONNECTION TO ROADWAY

NOTES / LEGEND:

SEE GENERAL NOTES ON SHEET 2 OF 4 FOR MORE INFORMATION.

DENOTES PLANTING OR NON-WALKING SURFACE NOT PART OF PEDESTRIAN CIRCULATION PATH.	⩔ ⩔ ⩔	GUTTER LINE	— · —
DETECTABLE WARNING SURFACE	▨	GRADE BREAK	·········
DENOTES PREFERRED LOCATION OF PEDESTRIAN PUSH BUTTON IF APPLICABLE.	☒	RAMP LIMITS OF PAYMENT	— —

SHEET 1 OF 4

Texas Department of Transportation | Design Division Standard

PEDESTRIAN FACILITIES
CURB RAMPS
PED-18

FILE: ped18	DN: TxDOT	DW: VP	CK: KM	CK: PK & JG
© TxDOT: MARCH, 2002	CONT	SECT	JOB	HIGHWAY
REVISIONS REVISED 08, 2005 REVISED 06, 2012 REVISED 01, 2018	DIST		COUNTY	SHEET NO.

DATE:
FILE:

DISCLAIMER:
The use of this standard is governed by the "Texas Engineering Practice Act". No warranty of any kind is made by TxDOT for any purpose whatsoever. TxDOT assumes no responsibility for the conversion of this standard to other formats or for incorrect results or damages resulting from its use.

GENERAL NOTES

CURB RAMPS

1. Install a curb ramp or blended transition at each pedestrian street crossing.
2. All slopes shown are maximum allowable. Cross slopes of 1.5% and lesser running should be used. Adjust curb ramp length or grade of approach sidewalks as directed.
3. Maximum allowable cross slope on sidewalk and curb ramp surfaces is 2%.
4. The minimum sidewalk width is 5'. Where the sidewalk is adjacent to the back of curb, a 6' sidewalk width is desirable. Where a 5' sidewalk cannot be provided due to site constraints, sidewalk width may be reduced to 4' for short distances. 5'x 5' passing areas at intervals not to exceed 200' are required.
5. Turning Spaces shall be 5'x 5' minimum. Cross slope shall be maximum 2%.
6. Clear space at the bottom of curb ramps shall be a minimum of 4'x 4' wholly contained within the crosswalk and wholly outside the parallel vehicular travel path.
7. Provide flared sides where the pedestrian circulation path crosses the curb ramp. Flared sides shall be sloped at 10% maximum, measured parallel to the curb. Returned curbs may be used only where pedestrians would not normally walk across the ramp, either because the adjacent surface is planted, substantially obstructed, or otherwise protected.
8. Additional information on curb ramp location, design, light reflective value and texture may be found in the latest draft of the Proposed Guidelines for Pedestrian Facilities in the Public Right of Way (PROWAG) as published by the U.S. Architectural and Transportation Barriers Compliance Board (Access Board).
9. To serve as a pedestrian refuge area, the median should be a minimum of 6' wide, measured from back of curbs. Medians should be designed to provide accessible passage over or through them.
10. Small channelization islands, which do not provide a minimum 5'x 5' landing at the top of curb ramps, shall be cut through level with the surface of the street.
11. Crosswalk dimensions, crosswalk markings and stop bar locations shall be as shown elsewhere in the plans. At intersections where crosswalk markings are not required, curb ramps shall align with theoretical crosswalks unless otherwise directed.
12. Provide curb ramps to connect the pedestrian access route at each pedestrian street crossing. Handrails are not required on curb ramps.
13. Curb ramps and landings shall be constructed and paid for in accordance with Item 531 "Sidewalks".
14. Place concrete at a minimum depth of 5" for ramps, flares and landings, unless otherwise directed.
15. Furnish and install No. 3 reinforcing steel bars at 18" o.c. both ways, unless otherwise directed.
16. Provide a smooth transition where the curb ramps connect to the street.
17. Curbs shown on sheet 1 within the limits of payment are considered part of the curb ramp for payment, whether it is concrete curb, gutter, or combined curb and gutter.
18. Existing features that comply with applicable standards may remain in place unless otherwise shown on the plans.

DETECTABLE WARNING MATERIAL

19. Curb ramps must contain a detectable warning surface that consists of raised truncated domes complying with PROWAG. The surface must contrast visually with adjoining surfaces, including side flares. Furnish and install an approved cast-in-place dark brown or dark red detectable warning surface material adjacent to uncolored concrete, unless specified elsewhere in the plans.
20. Detectable Warning Materials must meet TxDOT Departmental Materials Specification DMS 4350 and be listed on the Material Producer List. Install products in accordance with manufacturer's specifications.
21. Detectable warning surfaces must be firm, stable and slip resistant.
22. Detectable warning surfaces shall be a minimum of 24 inches in depth in the direction of pedestrian travel, and extend the full width of the curb ramp or landing where the pedestrian access route enters the street.
23. Detectable warning surfaces shall be located so that the edge nearest the curb line is at the back of curb and neither end of that edge is greater than 5 feet from the back of curb. Detectable warning surfaces may be curved along the corner radius.
24. Shaded areas on Sheet 1 of 4 indicate the approximate location for the detectable warning surface for each curb ramp type.

DETECTABLE WARNING PAVERS (IF USED)

25. Furnish detectable warning paver units meeting all requirements of ASTM C-936, C-33. Lay in a two by two unit basket weave pattern or as directed.
26. Lay full-size units first followed by closure units consisting of at least 25 percent (25%) of a full unit. Cut detectable warning paver units using a power saw.

SIDEWALKS

27. Provide clear ground space at operable parts, including pedestrian push buttons. Operable parts shall be placed within unobstructed reach range specified in PROWAG section R406.
28. Place traffic signal or illumination poles, ground boxes, controller boxes, signs, drainage facilities and other items so as not to obstruct the pedestrian access route or clear ground space.
29. Street grades and cross slopes shall be as shown elsewhere in the plans.
30. Changes in level greater than 1/4 inch are not permitted.
31. The least possible grade should be used to maximize accessibility. The running slope of sidewalks and crosswalks within the public right of way may follow the grade of the parallel roadway. Where a continuous grade greater than five percent (5%) must be provided, handrails may be desirable to improve accessibility. Handrails may also be needed to protect pedestrians from potentially hazardous conditions. If provided, handrails shall comply with PROWAG R409.
32. Handrail extensions shall not protrude into the usable landing area or into intersecting pedestrian routes.
33. Driveways and turnouts shall be constructed and paid for in accordance with Item "Intersections, Driveways and Turnouts". Sidewalks shall be constructed and paid for in accordance with Item, "Sidewalks".
34. Sidewalk details are shown elsewhere in the plans.

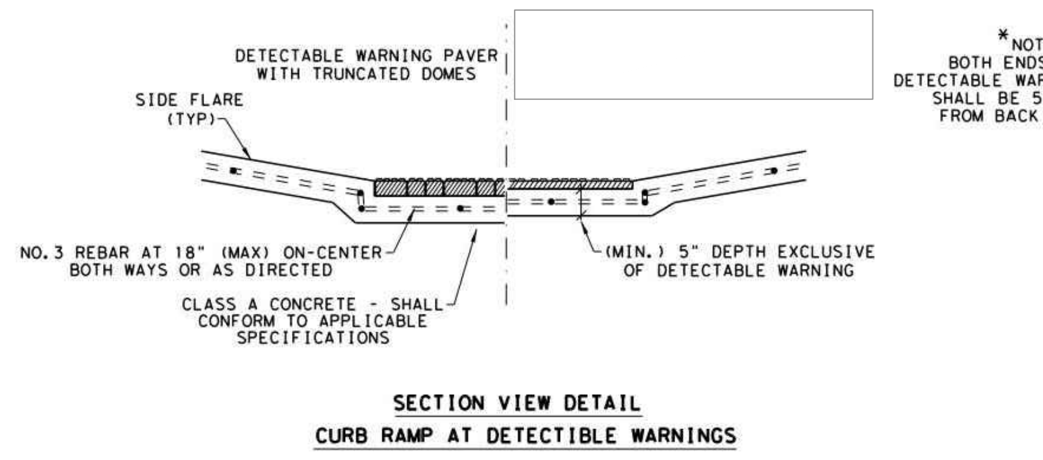
DETECTABLE WARNING PAVER WITH TRUNCATED DOMES
SIDE FLARE (TYP)
NO. 3 REBAR AT 18" (MAX) ON-CENTER BOTH WAYS OR AS DIRECTED
CLASS A CONCRETE - SHALL CONFORM TO APPLICABLE SPECIFICATIONS
(MIN.) 5" DEPTH EXCLUSIVE OF DETECTABLE WARNING

SECTION VIEW DETAIL
CURB RAMP AT DETECTIBLE WARNINGS

DETECTABLE WARNING SURFACE DETAILS

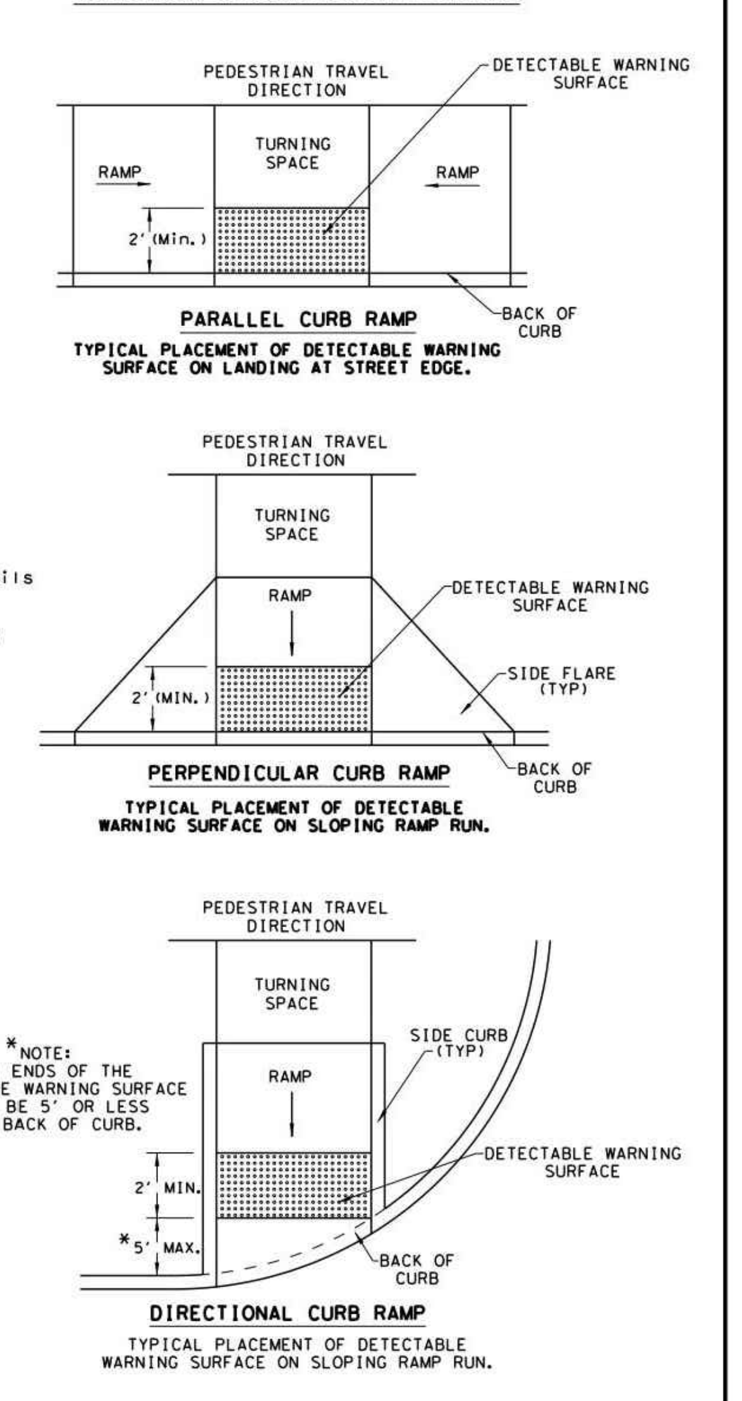
PEDESTRIAN TRAVEL DIRECTION
DETECTABLE WARNING SURFACE
TURNING SPACE
RAMP
2' (MIN.)
BACK OF CURB
PARALLEL CURB RAMP
TYPICAL PLACEMENT OF DETECTABLE WARNING SURFACE ON LANDING AT STREET EDGE.
SIDE FLARE (TYP)
PERPENDICULAR CURB RAMP
TYPICAL PLACEMENT OF DETECTABLE WARNING SURFACE ON SLOPING RAMP RUN.
SIDE CURB (TYP)
*NOTE: BOTH ENDS OF THE DETECTABLE WARNING SURFACE SHALL BE 5' OR LESS FROM BACK OF CURB.
*5' MAX.
DIRECTIONAL CURB RAMP
TYPICAL PLACEMENT OF DETECTABLE WARNING SURFACE ON SLOPING RAMP RUN.

SHEET 2 OF 4

Texas Department of Transportation | Design Division Standard

PEDESTRIAN FACILITIES
CURB RAMPS
PED-18

FILE: ped18	DN: TxDOT	DW: VP	CK: KM	CK: PK & JG
© TxDOT: MARCH, 2002	CONT	SECT	JOB	HIGHWAY
REVISIONS REVISED 08, 2005 REVISED 06, 2012 REVISED 01, 2018	DIST		COUNTY	SHEET NO.

DATE:
FILE:

DISCLAIMER:
The use of this standard is governed by the "Texas Engineering Practice Act". No warranty of any kind is made by TxDOT for any purpose whatsoever. TxDOT assumes no responsibility for the conversion of this standard to other formats or for incorrect results or damages resulting from its use.

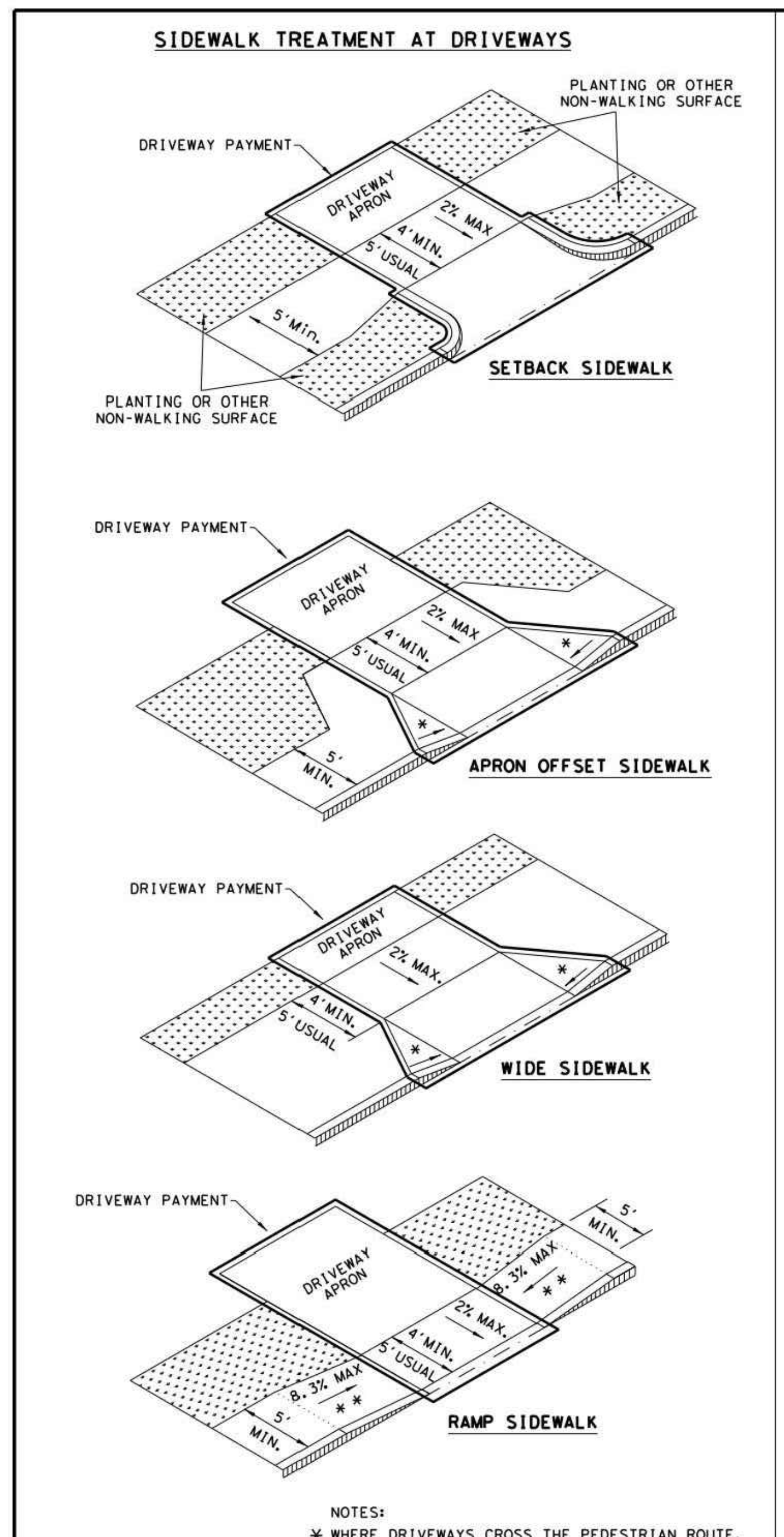
SIDEWALK TREATMENT AT DRIVEWAYS
PLANTING OR OTHER NON-WALKING SURFACE
DRIVEWAY PAYMENT
DRIVEWAY APRON
2% MAX.
4' MIN.
5' USUAL
5' MIN.
SETBACK SIDEWALK
APRON OFFSET SIDEWALK
WIDE SIDEWALK
8.3% MAX
RAMP SIDEWALK

NOTES:
- ✳ WHERE DRIVEWAYS CROSS THE PEDESTRIAN ROUTE, SIDES SHALL BE FLARED AT 10% MAX SLOPE.
- ✳ ✳ IF CURB HEIGHT IS GREATER THAN 6 INCHES, USE GRADE LESS THAN OR EQUAL TO 5%. HANDRAIL AND DETECTABLE WARNING ARE NOT REQUIRED.

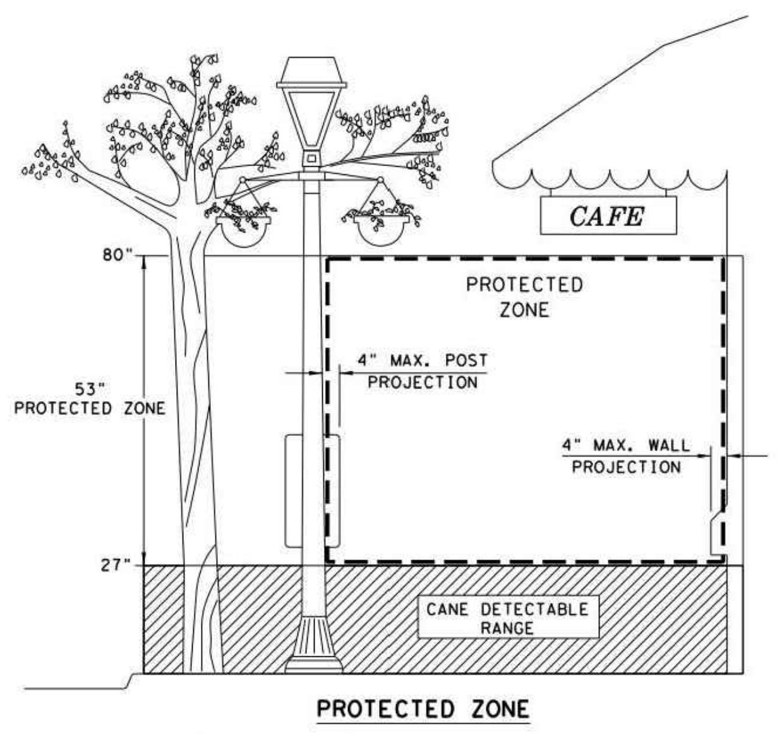
CAFE
PROTECTED ZONE
80"
53" PROTECTED ZONE
4" MAX. POST PROJECTION
4" MAX. WALL PROJECTION
27"
CANE DETECTABLE RANGE

PROTECTED ZONE

NOTE: IN PEDESTRIAN CIRCULATION AREA, MAXIMUM 4" PROJECTION FOR POST OR WALL MOUNTED OBJECTS BETWEEN 27" AND 80" ABOVE THE SURFACE.

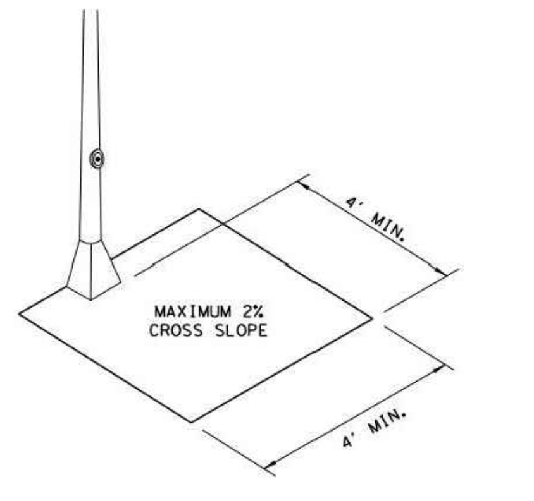
4' MIN.
MAXIMUM 2% CROSS SLOPE

CLEAR SPACE ADJACENT TO PEDESTRIAN PUSH BUTTON

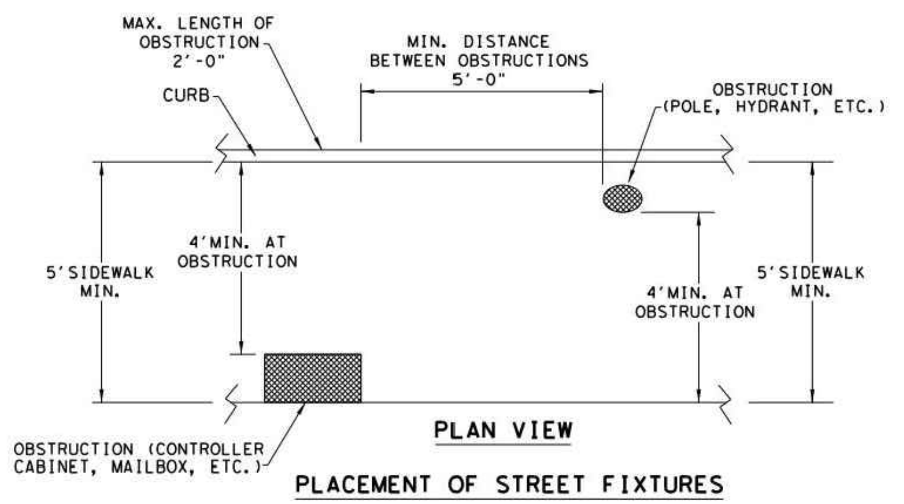
MAX. LENGTH OF OBSTRUCTION 2'-0"
MIN. DISTANCE BETWEEN OBSTRUCTIONS 5'-0"
CURB
OBSTRUCTION (POLE, HYDRANT, ETC.)
5' SIDEWALK MIN.
4' MIN. AT OBSTRUCTION
OBSTRUCTION (CONTROLLER CABINET, MAILBOX, ETC.)
PLAN VIEW

PLACEMENT OF STREET FIXTURES

NOTE: ITEMS NOT INTENDED FOR PUBLIC USE. MINIMUM 4' X 4' CLEAR GROUND SPACE REQUIRED AT PUBLIC USE FIXTURES.

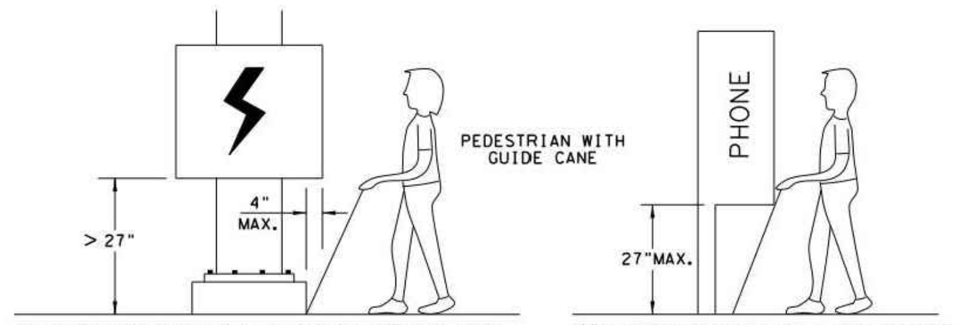
PEDESTRIAN WITH GUIDE CANE
4" MAX.
> 27"
PHONE
27" MAX.

WHEN AN OBSTRUCTION OF A HEIGHT GREATER THAN 27" FROM THE SURFACE WOULD CREATE A PROTRUSION OF MORE THAN 4" INTO THE PEDESTRIAN CIRCULATION AREA, CONSTRUCT ADDITIONAL CURB OR FOUNDATION AT THE BOTTOM TO PROVIDE A MAXIMUM 4" OVERHANG.

PROTRUDING OBJECTS OF A HEIGHT ≤27" ARE DETECTABLE BY CANE AND DO NOT REQUIRE ADDITIONAL TREATMENT.

DETECTION BARRIER FOR VERTICAL CLEARANCE < 80"

SHEET 3 OF 4

Texas Department of Transportation | Design Division Standard

PEDESTRIAN FACILITIES
CURB RAMPS
PED-18

FILE: ped18	DN: TxDOT	DW: VP	CK: KM	CK: PK & JG
© TxDOT: MARCH, 2002	CONT	SECT	JOB	HIGHWAY
REVISIONS REVISED 08, 2005 REVISED 06, 2012 REVISED 01, 2018	DIST		COUNTY	SHEET NO.

DATE:
FILE:

DISCLAIMER:
The use of this standard is governed by the "Texas Engineering Practice Act". No warranty of any kind is made by TxDOT for any purpose whatsoever. TxDOT assumes no responsibility for the conversion of this standard to other formats or for incorrect results or damages resulting from its use.

TYPICAL CROSSING LAYOUTS
SEE SHEET 1 OF 4 FOR DETAILS AND DIMENSIONS

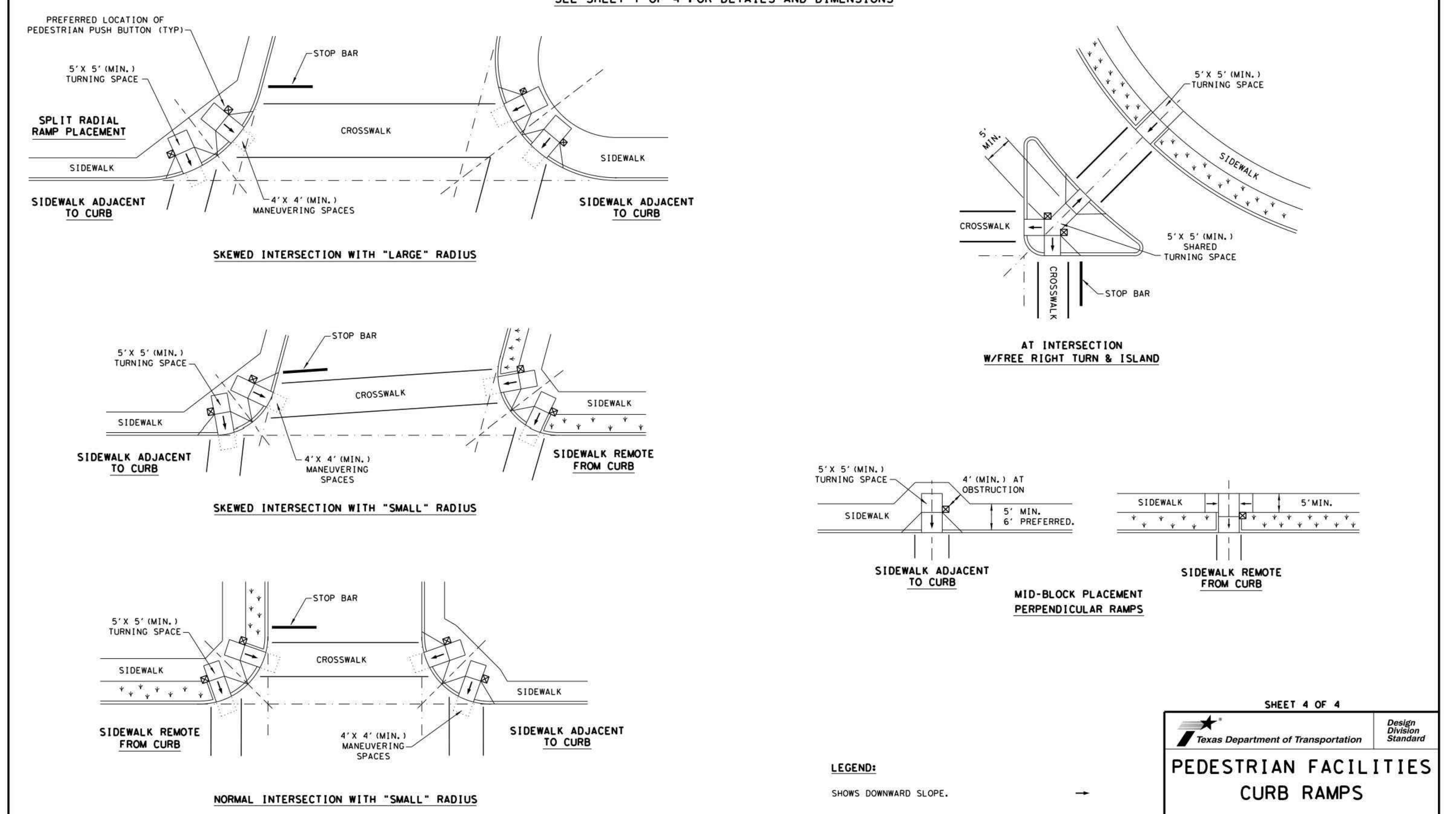
PREFERRED LOCATION OF PEDESTRIAN PUSH BUTTON (TYP)
5'X 5' (MIN.) TURNING SPACE
STOP BAR
SPLIT RADIAL RAMP PLACEMENT
CROSSWALK
SIDEWALK
SIDEWALK ADJACENT TO CURB
4'X 4' (MIN.) MANEUVERING SPACES
SKEWED INTERSECTION WITH "LARGE" RADIUS
5'X 5' (MIN.) SHARED TURNING SPACE
AT INTERSECTION W/FREE RIGHT TURN & ISLAND
SIDEWALK REMOTE FROM CURB
SKEWED INTERSECTION WITH "SMALL" RADIUS
4' (MIN.) AT OBSTRUCTION
5' MIN. 6' PREFERRED.
MID-BLOCK PLACEMENT PERPENDICULAR RAMPS
NORMAL INTERSECTION WITH "SMALL" RADIUS

LEGEND:

SHOWS DOWNWARD SLOPE.	→
DENOTES PREFERRED LOCATION OF PEDESTRIAN PUSH BUTTON (IF APPLICABLE).	☒
DENOTES PLANTING OR NON-WALKING SURFACE NOT PART OF PEDESTRIAN CIRCULATION PATH.	⩔ ⩔ ⩔

SHEET 4 OF 4

Texas Department of Transportation | Design Division Standard

PEDESTRIAN FACILITIES
CURB RAMPS
PED-18

FILE: ped18	DN: TxDOT	DW: VP	CK: KM	CK: PK & JG
© TxDOT: MARCH, 2002	CONT	SECT	JOB	HIGHWAY
REVISIONS REVISED 08, 2005 REVISED 06, 2012 REVISED 01, 2018	DIST		COUNTY	SHEET NO.

DATE:
FILE:

NO.	REVISION	DATE

STATE OF TEXAS
CALEB M. CHANCE
98401
LICENSED PROFESSIONAL ENGINEER
Caleb M. Chance 8/2/24

PAPE-DAWSON ENGINEERS
2000 NW LOOP 410 | SAN ANTONIO, TX 78213 | 210.375.9000
TEXAS ENGINEERING FIRM #470 | TEXAS SURVEYING FIRM #10028800

STONEHILL UNITS 2B & 6A
SAN ANTONIO, TEXAS

STREET DETAILS

PLAT NO. 24-11800312
JOB NO. 12456-13
DATE JULY 2024
DESIGNER RA
CHECKED BL DRAWN EG
SHEET C2.11

Date: Aug 13, 2024, 7:55am User ID: ralvarez
File: P:\124\56\13\Design\Civil\STDT-1245613.dwg

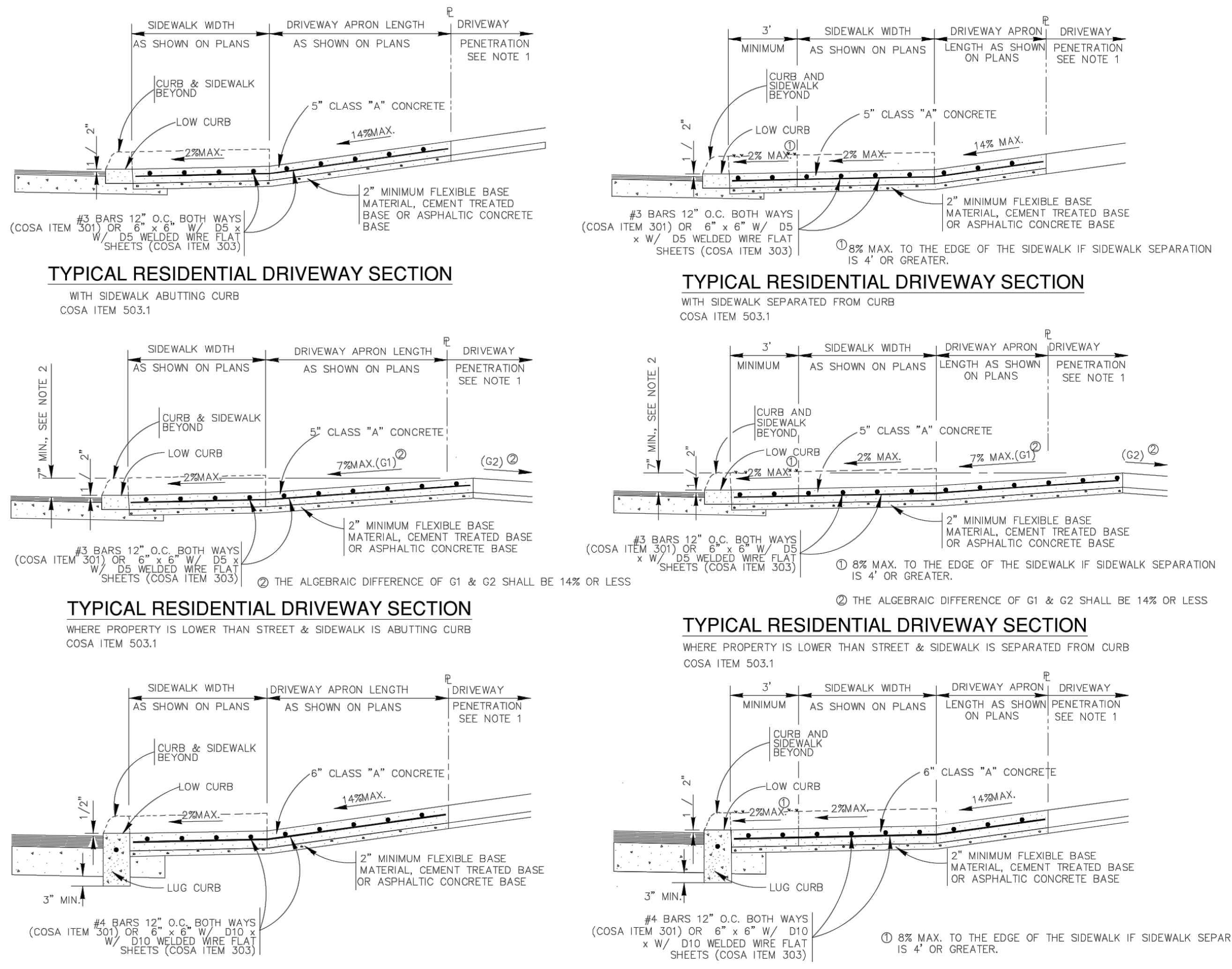
SIDEWALK WIDTH AS SHOWN ON PLANS
DRIVEWAY APRON LENGTH AS SHOWN ON PLANS
DRIVEWAY PENETRATION SEE NOTE 1
CURB & SIDEWALK BEYOND
LOW CURB
5" CLASS "A" CONCRETE
2% MAX.
14% MAX.
2" MINIMUM FLEXIBLE BASE MATERIAL, CEMENT TREATED BASE OR ASPHALTIC CONCRETE BASE
#3 BARS 12" O.C. BOTH WAYS (COSA ITEM 301) OR 6" x 6" W/ D5 x W/ D5 WELDED WIRE FLAT SHEETS (COSA ITEM 303)
① 8% MAX. TO THE EDGE OF THE SIDEWALK IF SIDEWALK SEPARATION IS 4' OR GREATER.
② THE ALGEBRAIC DIFFERENCE OF G1 & G2 SHALL BE 14% OR LESS
7" MIN. SEE NOTE 2
6" CLASS "A" CONCRETE
LUG CURB
3" MIN.
#4 BARS 12" O.C. BOTH WAYS (COSA ITEM 301) OR 6" x 6" W/ D10 x W/ D10 WELDED WIRE FLAT SHEETS (COSA ITEM 303)

TYPICAL RESIDENTIAL DRIVEWAY SECTION
WITH SIDEWALK ABUTTING CURB
COSA ITEM 503.1

TYPICAL RESIDENTIAL DRIVEWAY SECTION
WITH SIDEWALK SEPARATED FROM CURB
COSA ITEM 503.1

TYPICAL RESIDENTIAL DRIVEWAY SECTION
WHERE PROPERTY IS LOWER THAN STREET & SIDEWALK IS ABUTTING CURB
COSA ITEM 503.1

TYPICAL RESIDENTIAL DRIVEWAY SECTION
WHERE PROPERTY IS LOWER THAN STREET & SIDEWALK IS SEPARATED FROM CURB
COSA ITEM 503.1

TYPICAL COMMERCIAL DRIVEWAY SECTION
WITH SIDEWALK ABUTTING CURB
COSA ITEM 503.2

TYPICAL COMMERCIAL DRIVEWAY SECTION
WITH SIDEWALK SEPARATED FROM CURB
COSA ITEM 503.2

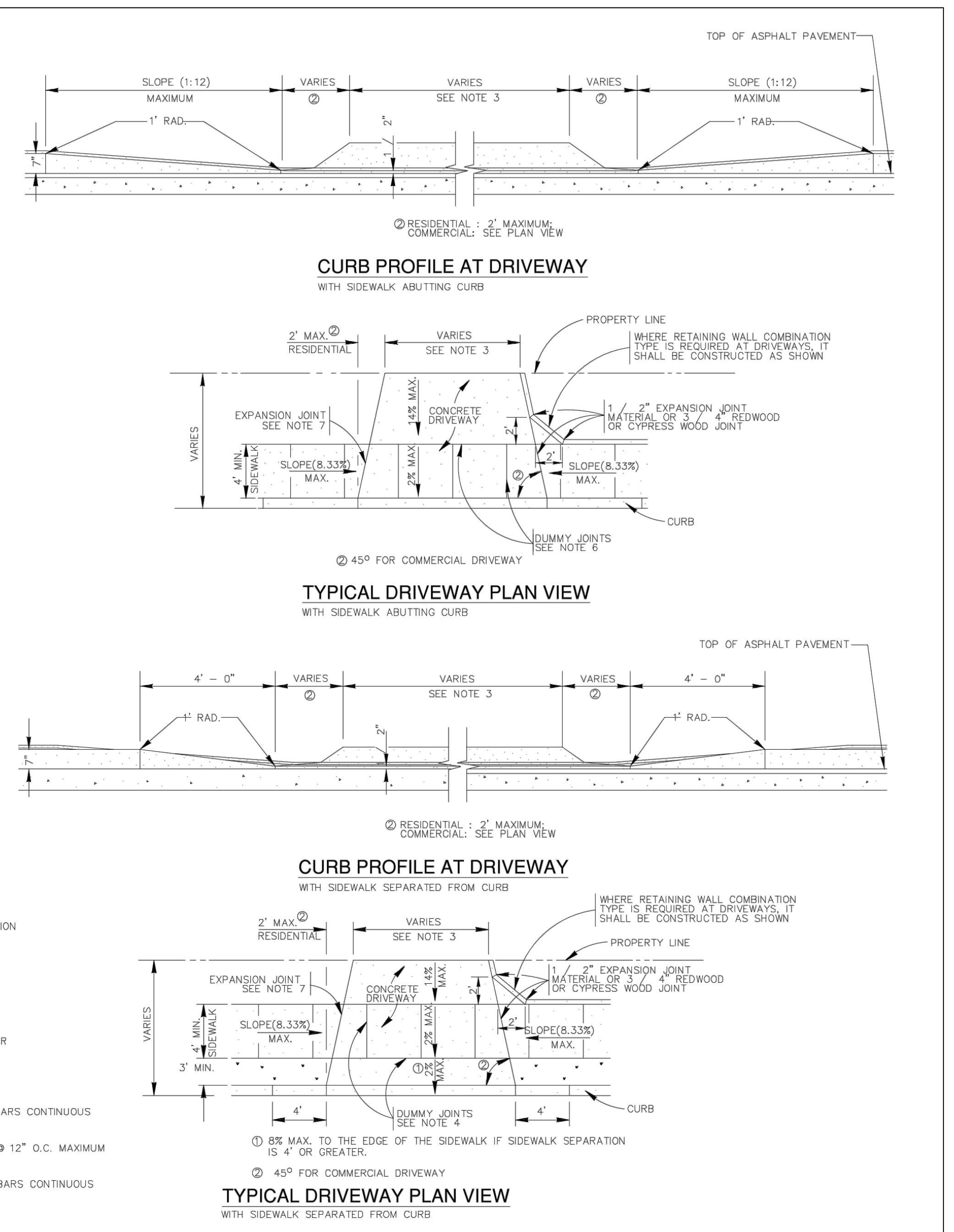
TOP OF ASPHALT PAVEMENT
SLOPE (1:12)
VARIES
SEE NOTE 3
MAXIMUM
1' RAD.
② RESIDENTIAL - 2' MAXIMUM; COMMERCIAL: SEE PLAN VIEW
PROPERTY LINE
WHERE RETAINING WALL COMBINATION TYPE IS REQUIRED AT DRIVEWAYS, IT SHALL BE CONSTRUCTED AS SHOWN
EXPANSION JOINT SEE NOTE 7
CONCRETE DRIVEWAY
SLOPE(8.33%) MAX.
1/2" EXPANSION JOINT MATERIAL OR 3/4" REDWOOD OR CYPRESS WOOD JOINT
DUMMY JOINTS SEE NOTE 4
CURB
② 45° FOR COMMERCIAL DRIVEWAY
① 8% MAX. TO THE EDGE OF THE SIDEWALK IF SIDEWALK SEPARATION IS 4' OR GREATER.

CURB PROFILE AT DRIVEWAY
WITH SIDEWALK ABUTTING CURB

TYPICAL DRIVEWAY PLAN VIEW
WITH SIDEWALK ABUTTING CURB

CURB PROFILE AT DRIVEWAY
WITH SIDEWALK SEPARATED FROM CURB

TYPICAL DRIVEWAY PLAN VIEW
WITH SIDEWALK SEPARATED FROM CURB

CONCRETE DRIVEWAY NOTES

1. DRIVEWAY PENETRATION REFERS TO A PORTION OF THE DRIVEWAY THAT MAY BE NECESSARY TO RECONSTRUCT WITHIN PRIVATE PROPERTY TO COMPLY WITH A MAXIMUM DRIVEWAY SLOPE. THIS PORTION OF THE DRIVEWAY SHALL BE PAID FOR UNDER THE FOLLOWING ITEMS AS MAY APPLY:
   - A.) CONCRETE DRIVEWAY PAID FOR UNDER ITEM NO. 503.1 OR 503.2.
   - B.) ASPHALTIC CONCRETE DRIVEWAY PAID FOR UNDER COSA ITEM NO. 503.4 AND SHALL INCLUDE A MINIMUM OF 1" ASPHALT TYPE 'D' & 6" FLEXIBLE BASE
   - C.) GRAVEL DRIVEWAY PAID FOR UNDER ITEM NO. 503.5 AND SHALL INCLUDE A MINIMUM OF 6" FLEXIBLE BASE
2. 7" MINIMUM HEIGHT WILL NOT NECESSARILY OCCUR AT THE PROPERTY LINE. IT MAY OCCUR WITHIN THE RIGHT OF WAY OR WITHIN THE DRIVEWAY PENETRATION ON PRIVATE PROPERTY.
3. THE PROPOSED DRIVEWAY SHOULD MATCH THE EXISTING WIDTH AT THE PROPERTY LINE BUT UNLESS AUTHORIZED BY THE COUNTY ENGINEER, THE WIDTH SHALL BE WITHIN THE FOLLOWING VALUES:

TYPE	MAXIMUM
RESIDENTIAL (UP TO 2 CAR GARAGE)	20'
RESIDENTIAL (MORE THAN 2 CAR GARAGE)	28'
COMMERCIAL	40'
INDUSTRIAL	40'

4. DUMMY JOINTS PARALLEL TO THE CURB SHALL BE PLACED WHERE THE SIDEWALK MEETS THE DRIVEWAY. DUMMY JOINTS PERPENDICULAR TO THE CURB, AND WITHIN THE BOUNDARIES OF THE PARALLEL DUMMY JOINTS, SHALL BE PLACED AT INTERVALS EQUAL TO THE WIDTH OF THE SIDEWALK.
5. A MINIMUM OF TWO ROUND AND SMOOTH DOWEL BARS 3 /8" IN DIAMETER AND 18" IN LENGTH SHALL BE SPACED 18" APART AT EACH EXPANSION JOINT.
6. SIDEWALK RAMP LENGTHS SHALL BE OF SUFFICIENT LENGTH TO MAINTAIN 8.33% MAXIMUM SLOPE. WHERE SIDEWALKS CROSS DRIVEWAYS, SIDEWALK CROSS SLOPE SHALL NOT EXCEED 2%.
7. SIDEWALK RAMP SURFACE SHALL BE BRUSH FINISHED.

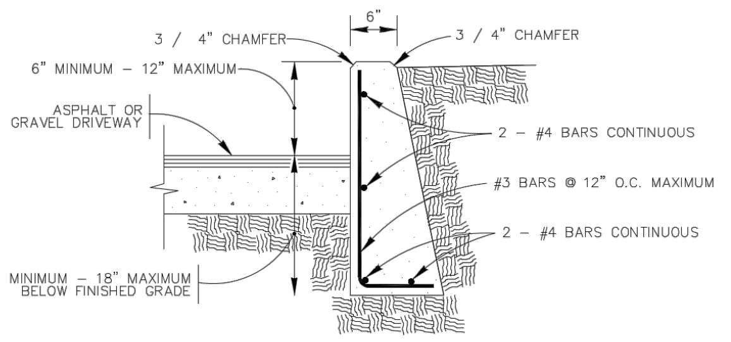
3 / 4" CHAMFER
6"
6" MINIMUM - 12" MAXIMUM
ASPHALT OR GRAVEL DRIVEWAY
2 - #4 BARS CONTINUOUS
#3 BARS @ 12" O.C. MAXIMUM
2 - #4 BARS CONTINUOUS
12" MINIMUM - 18" MAXIMUM BELOW FINISHED GRADE
12"

NOTE:
1. COST OF REINFORCEMENT TO BE INCLUDED IN UNIT COST OF COSA ITEM 307.1.
2. CONCRETE RETAINING WALL COMBINATION TYPE SHALL BE USED FOR CONCRETE DRIVEWAYS.

DRIVEWAY - CONCRETE RETAINING WALL
ON COMPACTED SUBGRADE
COSA ITEM 307.1

BEXAR COUNTY
CONCRETE DRIVEWAY STANDARDS
DATE: FEBRUARY 2024

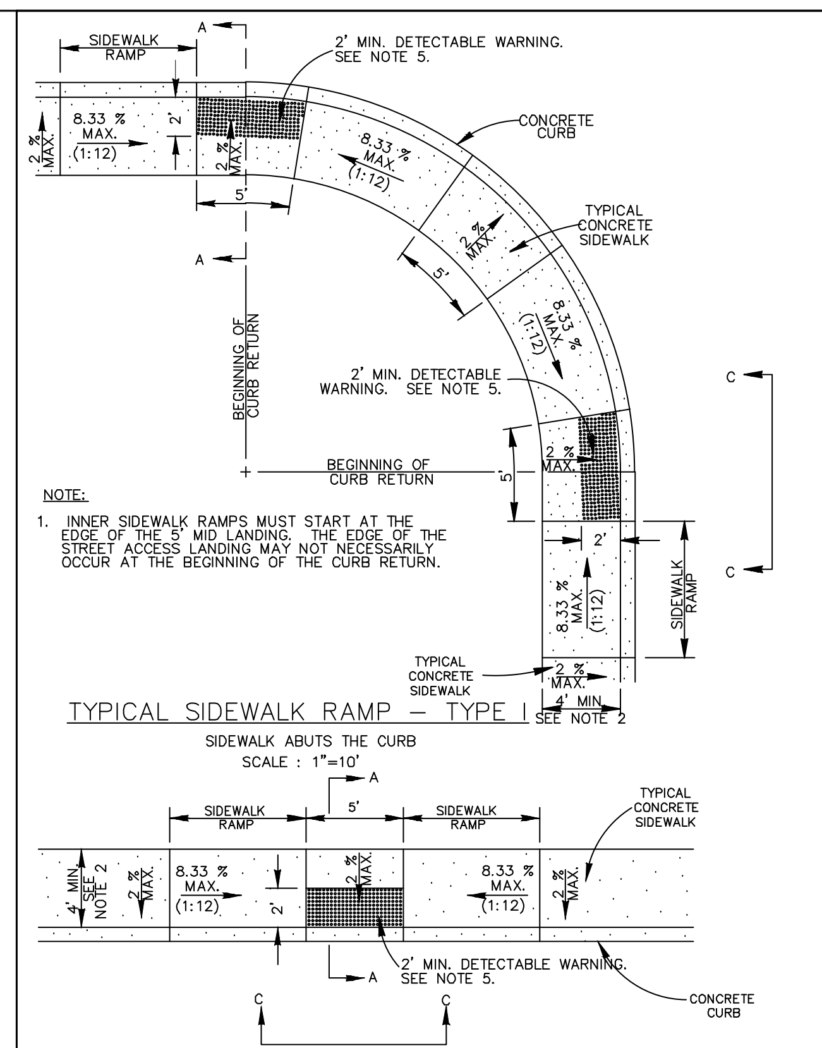
SIDEWALK RAMP
A
2' MIN. DETECTABLE WARNING. SEE NOTE 5.
8.33 % MAX. (1:12)
2% MAX.
CONCRETE CURB
TYPICAL CONCRETE SIDEWALK
BEGINNING OF CURB RETURN
2' MIN. DETECTABLE WARNING. SEE NOTE 5.
C
4' MIN. SEE NOTE 2
5'
CONCRETE CURB

NOTE:
1. INNER SIDEWALK RAMPS MUST START AT THE EDGE OF THE 5' MID LANDING. THE EDGE OF THE STREET ACCESS LANDING MAY NOT NECESSARILY OCCUR AT THE BEGINNING OF THE CURB RETURN.

TYPICAL SIDEWALK RAMP – TYPE I
SIDEWALK ABUTS THE CURB
SCALE : 1"=10'

TYPICAL SIDEWALK RAMP – TYPE II
USED AT TEE INTERSECTIONS WHERE SIDEWALK ABUTS CURB
SCALE : 1"=10'

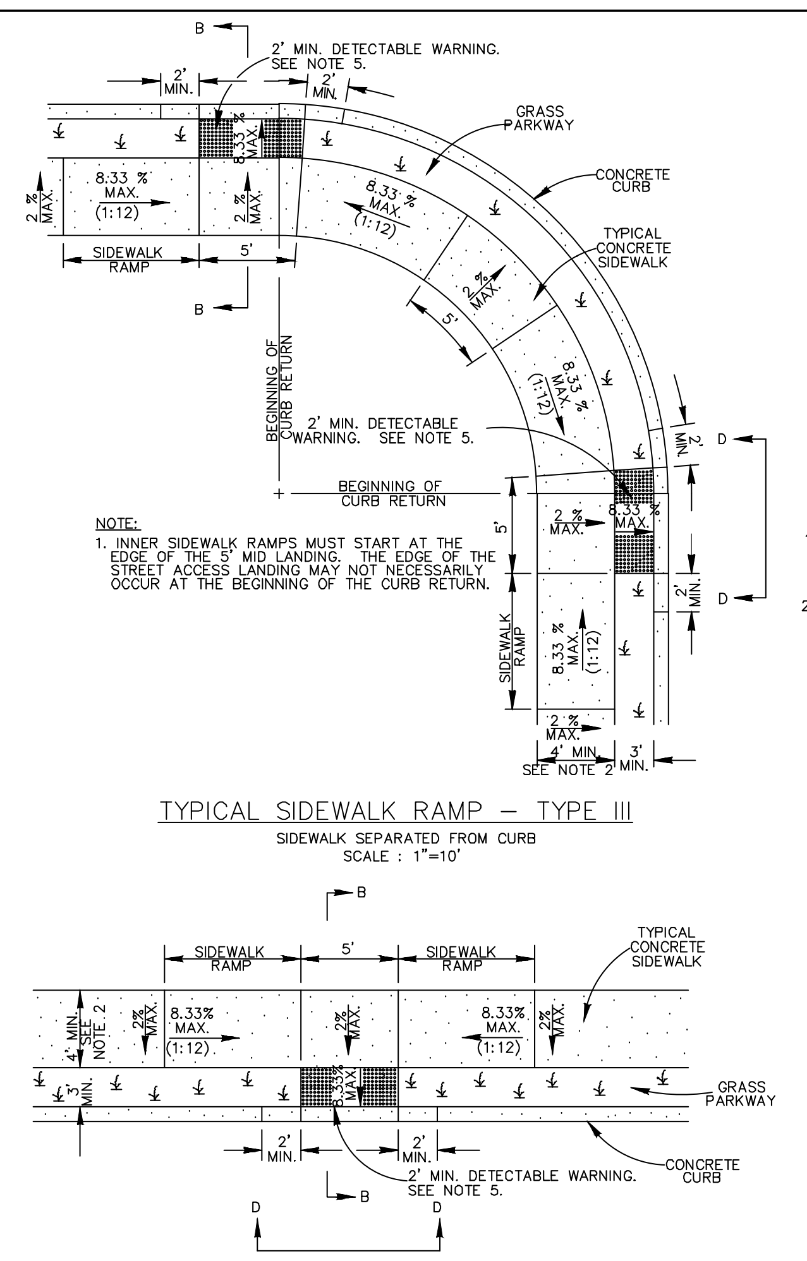
B
2' MIN. DETECTABLE WARNING. SEE NOTE 5.
2' MIN.
GRASS PARKWAY
CONCRETE CURB
TYPICAL CONCRETE SIDEWALK
8.33 % MAX. (1:12)
SIDEWALK RAMP
BEGINNING OF CURB RETURN
4' MIN. SEE NOTE 2
3' MIN.
D
CONCRETE CURB

NOTE:
1. INNER SIDEWALK RAMPS MUST START AT THE EDGE OF THE 5' MID LANDING. THE EDGE OF THE STREET ACCESS LANDING MAY NOT NECESSARILY OCCUR AT THE BEGINNING OF THE CURB RETURN.

TYPICAL SIDEWALK RAMP – TYPE III
SIDEWALK SEPARATED FROM CURB
SCALE : 1"=10'

TYPICAL SIDEWALK RAMP – TYPE IV
USED AT TEE INTERSECTIONS WHERE SIDEWALK IS SEPARATED FROM CURB
SCALE : 1"=10'

GENERAL NOTES

1. WHEN POSSIBLE SIDEWALKS SHOULD BE PLACED NEXT TO THE PROPERTY LINE, ALLOWING A MINIMUM OF 1 FOOT BUFFER. DEVIATION OF THE PATHWAY FROM A STRAIGHT LINE IS ENCOURAGED TO AVOID TREES OR OTHER OBSTRUCTIONS.
2. FOR LOCAL TYPE "A" STREETS, SIDEWALKS SHALL HAVE A MINIMUM UNOBSTRUCTED WIDTH OF 4' AND IF SEPARATED FROM THE CURB, THE SIDEWALK SHALL BE LOCATED A MINIMUM OF 3' FROM THE BACK OF CURB.
3. FOR OTHER THAN LOCAL TYPE "A" STREETS, SIDEWALKS SHALL HAVE A MINIMUM UNOBSTRUCTED WIDTH OF 4' AND SEPARATED A MINIMUM OF 3' FROM THE BACK OF CURB OR AS AN OPTION, THE SIDEWALK SHALL HAVE A MINIMUM WIDTH OF 6' WHEN LOCATED AT THE BACK OF CURB.
4. SIDEWALK RAMP LENGTHS PRESENTED IN TABLE 1 ARE GUIDELINES ONLY. SIDEWALK RAMP LENGTHS SHALL BE OF SUFFICIENT LENGTH TO MAINTAIN 8.33% (1:12) MAXIMUM SLOPE.
5. ALL CURB-RAMPS OR LANDINGS ABUTTING THE CROSSWALK SHALL HAVE A DETECTABLE WARNING 24 INCHES DEEP (IN THE DIRECTION OF PEDESTRIAN TRAVEL) AND EXTENDING THE FULL WIDTH OF THE CURB RAMP OR LANDING. THE DETECTABLE WARNING SHALL CONSIST OF RAISED TRUNCATED DOMES, ALIGNED IN A GRID PATTERN WITH A DIAMETER OF A NOMINAL 0.9 INCHES (23 MM), A HEIGHT OF NOMINAL 0.2 INCHES (5 MM) AND A CENTER-TO-CENTER SPACING OF NOMINAL 2.35 INCHES (60 MM). THE DETECTABLE WARNING SURFACE SHALL BE PAVERS CONFORMING TO TXDOT STANDARD PED-05, PEDESTRIAN FACILITIES.
6. DETECTABLE WARNINGS SHALL CONTRAST VISUALLY WITH ADJOINING SURFACES, EITHER LIGHT-ON-DARK, OR DARK-ON-LIGHT. THE MATERIAL USED TO PROVIDE CONTRAST SHALL BE AN INTEGRAL PART OF THE WALKING SURFACE.
7. SIDEWALK RAMP TYPE V SHALL BE USED ONLY WHERE THERE IS SIGNIFICANT RESTRICTION WITHIN THE PARKWAY TO CONSTRUCT TYPE I OR TYPE III RAMPS.
8. CONSTRUCTION OF ALL WHEELCHAIR RAMPS TO BE INCLUDED UNDER ITEMS "500 – CONCRETE CURB, GUTTER, AND CONCRETE CURB AND GUTTER" AND / OR "502 – CONCRETE SIDEWALKS". RAMP SURFACE SHALL BE BRUSH FINISHED.
9. THESE DETAILS ARE FOR REFERENCE ONLY. ACTUAL LOCATIONS OF WHEELCHAIR RAMPS TO BE SHOWN ON CONSTRUCTION PLANS. CITY CONSTRUCTION INSPECTOR CAN ADJUST LOCATIONS FOR SAFETY OR UTILITY CLEARANCE.
10. SIDEWALKS LESS THAN 5 FEET IN WIDTH SHALL BE PROVIDED WITH A PASSING SPACE AT A MAXIMUM SPACING OF 200 FEET.
11. WHEELCHAIR RAMP SHALL BE CONSTRUCTED WITH 4" CLASS "A" CONCRETE AND 2" MINIMUM GRAVEL, CRUSHED ROCK OR FLEXIBLE BASE MATERIAL.
12. REINFORCING STEEL SHALL BE #3 BARS AT 18" O.C.E.W. OR 6" x 6" – W2.9 x W2.9 WIRE MESH.
13. SIDEWALK GRADES SHALL NOT EXCEED THE GRADE ESTABLISHED FOR THE ADJACENT ROADWAY, ANY SIDEWALK CONSTRUCTION THAT DEVIATES FROM THE NATURAL GRADE OF THE ROADWAY TO CREATE A GRADE STEEPER THAN THE EXISTING ROADWAY WILL REQUIRE RAMPS, HANDRAILS AND RESTING PLATFORMS TO BE CONSTRUCTED IN ACCORDANCE WITH ADA AND TAS STANDARDS.
14. SIDEWALK CROSS GRADE SHALL HAVE A MAXIMUM SLOPE OF 2%. LANDINGS SHALL HAVE A MAXIMUM SLOPE OF 2% IN ANY DIRECTION.
15. THE CHANGE OF GRADE BETWEEN ADJACENT SURFACES SHALL BE LESS THAN 11%. THE CHANGE OF GRADE SHALL BE DEFINED AS THE ALGEBRAIC DIFFERENCE OF THE ADJACENT SURFACE SLOPES. IN THE CASE OF A STREET ACCESS RAMP DESIGNED AT THE 8.33% MAXIMUM SLOPE, THE ADJACENT PAVEMENT CROSS SLOPE SHALL BE LESS THAN 2.67% (I.E. 8.33-(-2.67)=11). IN ADDITION, THE ADJACENT PAVEMENT CROSS SLOPE SHALL BE LESS THAN OR EQUAL TO 5%.
16. IF THE CHANGE OF GRADE BETWEEN ADJACENT SURFACES IS GREATER THAN OR EQUAL TO 11%, A LEVELING STRIP, 2 FEET IN LENGTH, SHALL BE PROVIDED TO TRANSITION THE ADJACENT SURFACES.
17. ADA COMPLIANCE IN ALTERATIONS INCLUDE ONLY THAT WORK WITHIN THE LIMITS, BOUNDARIES OR SCOPE

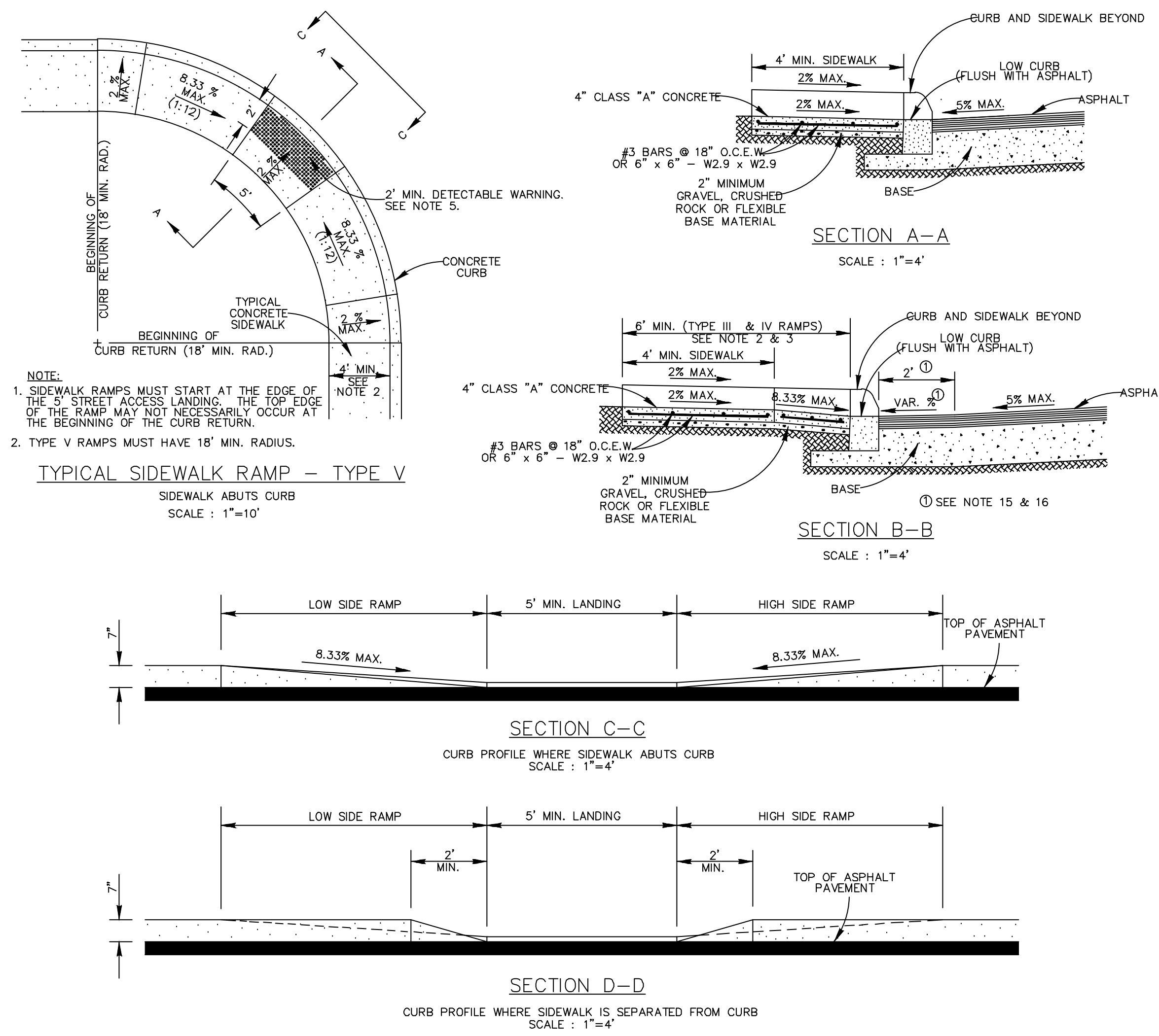
CURB RETURN (18' MIN. RAD.)
BEGINNING OF CURB RETURN (18' MIN. RAD.)
TYPICAL CONCRETE SIDEWALK
2' MIN. DETECTABLE WARNING. SEE NOTE 5.
CONCRETE CURB
4' MIN. SEE NOTE 2
CURB AND SIDEWALK BEYOND
4' MIN. SIDEWALK
2% MAX.
LOW CURB (FLUSH WITH ASPHALT)
ASPHALT
4" CLASS "A" CONCRETE
#3 BARS @ 18" O.C.E.W. OR 6" x 6" - W2.9 x W2.9
2" MINIMUM GRAVEL, CRUSHED ROCK OR FLEXIBLE BASE MATERIAL
BASE
5% MAX.
4' MIN. (TYPE III & IV RAMPS) SEE NOTE 2 & 3
8.33% MAX.
VAR.
① SEE NOTE 15 & 16
LOW SIDE RAMP
5' MIN. LANDING
HIGH SIDE RAMP
TOP OF ASPHALT PAVEMENT
2' MIN.

NOTE:
1. SIDEWALK RAMPS MUST START AT THE EDGE OF THE 5' STREET ACCESS LANDING. THE TOP EDGE OF THE RAMP MAY NOT NECESSARILY OCCUR AT THE BEGINNING OF THE CURB RETURN.
2. TYPE V RAMPS MUST HAVE 18' MIN. RADIUS.

TYPICAL SIDEWALK RAMP – TYPE V
SIDEWALK ABUTS CURB
SCALE : 1"=10'

SECTION A-A
SCALE : 1"=4'

SECTION B-B
SCALE : 1"=4'

SECTION C-C
CURB PROFILE WHERE SIDEWALK ABUTS CURB
SCALE : 1"=4'

SECTION D-D
CURB PROFILE WHERE SIDEWALK IS SEPARATED FROM CURB
SCALE : 1"=4'

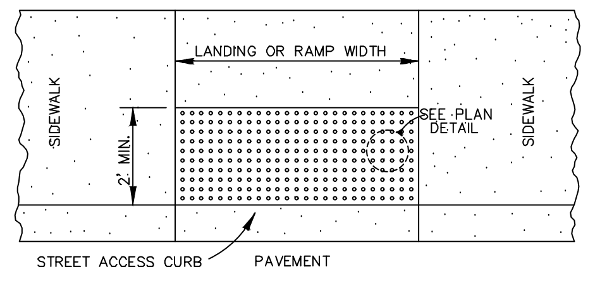
LANDING OR RAMP WIDTH
SIDEWALK
2' MIN.
SEE PLAN DETAIL
STREET ACCESS CURB
PAVEMENT

DETECTABLE WARNING SURFACE
SCALE : 1"=4'

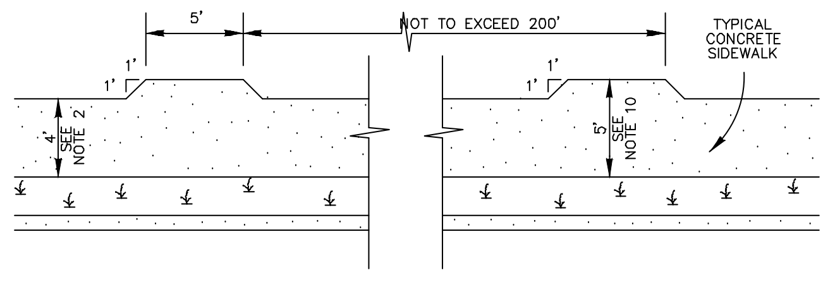
5'
NOT TO EXCEED 200'
TYPICAL CONCRETE SIDEWALK
1'
4' SEE NOTE 2
5' SEE NOTE

SIDEWALK PASSING SPACE
SCALE : 1"=10'

TABLE 1 (SEE NOTE 4)		
GUTTER SLOPE	SIDEWALK RAMP LENGTH (1:12)	
	LOW SIDE	HIGH SIDE
1%	5'-6"	7'-2"
2%	5'-0"	8'-4"
3%	4'-6"	10'-0"
4%	4'-2"	12'-6"
5%	3'-10"	16'-8"

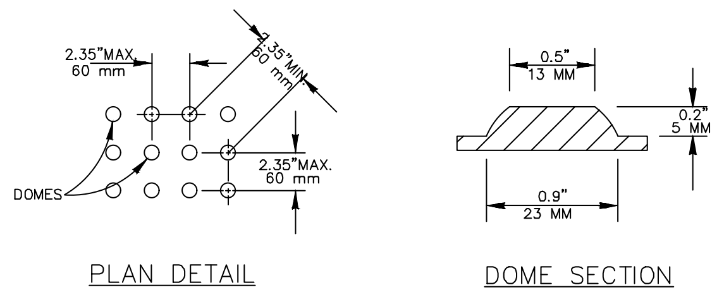
2.35"MAX. 60 mm
DOMES
0.5" 13 MM
0.2" 5 MM
0.9" 23 MM

PLAN DETAIL

DOME SECTION

NOTE:
STAMPED CONCRETE TRUNCATED DOMES WILL NOT BE ALLOWED TO BE USED FOR DETECTABLE WARNING ON WHEELCHAIR RAMPS. CONTRACTOR MUST SUBMIT TRUNCATED DOME INFORMATION THAT IS TO BE USED ON WHEELCHAIR RAMPS TO THE PROJECT MANAGER FOR APPROVAL AT LEAST 30 DAYS PRIOR TO INSTALLATION.

MAY 2009
CITY OF SAN ANTONIO
CAPITAL IMPROVEMENTS MANAGEMENT SERVICES DEPARTMENT
WHEELCHAIR RAMP STANDARDS
PROJECT NO.: DATE:
DSGN. BY: CHKD. BY: R.S. HOSSEINI, P.E. SHEET NO.: OF

NO. REVISION DATE

STATE OF TEXAS
CALEB M. CHANCE
98401
LICENSED PROFESSIONAL ENGINEER
1/23/25

PAPE-DAWSON ENGINEERS
2000 NW LOOP 410 I SAN ANTONIO, TX 78213 I 210.375.9000
TEXAS ENGINEERING FIRM #470 I TEXAS SURVEYING FIRM #10028800

STONEHILL UNITS 2B & 6A
SAN ANTONIO, TEXAS

STREET DETAILS

PLAT NO. 24-11800312
JOB NO. 12456-13
DATE JULY 2024
DESIGNER RA
CHECKED BL DRAWN XX
SHEET C2.12

Date: Jan 22, 2025, 1:26pm User ID: ralvarez
File: P:\124\56\13\Design\Civil\STDT-1245613.dwg

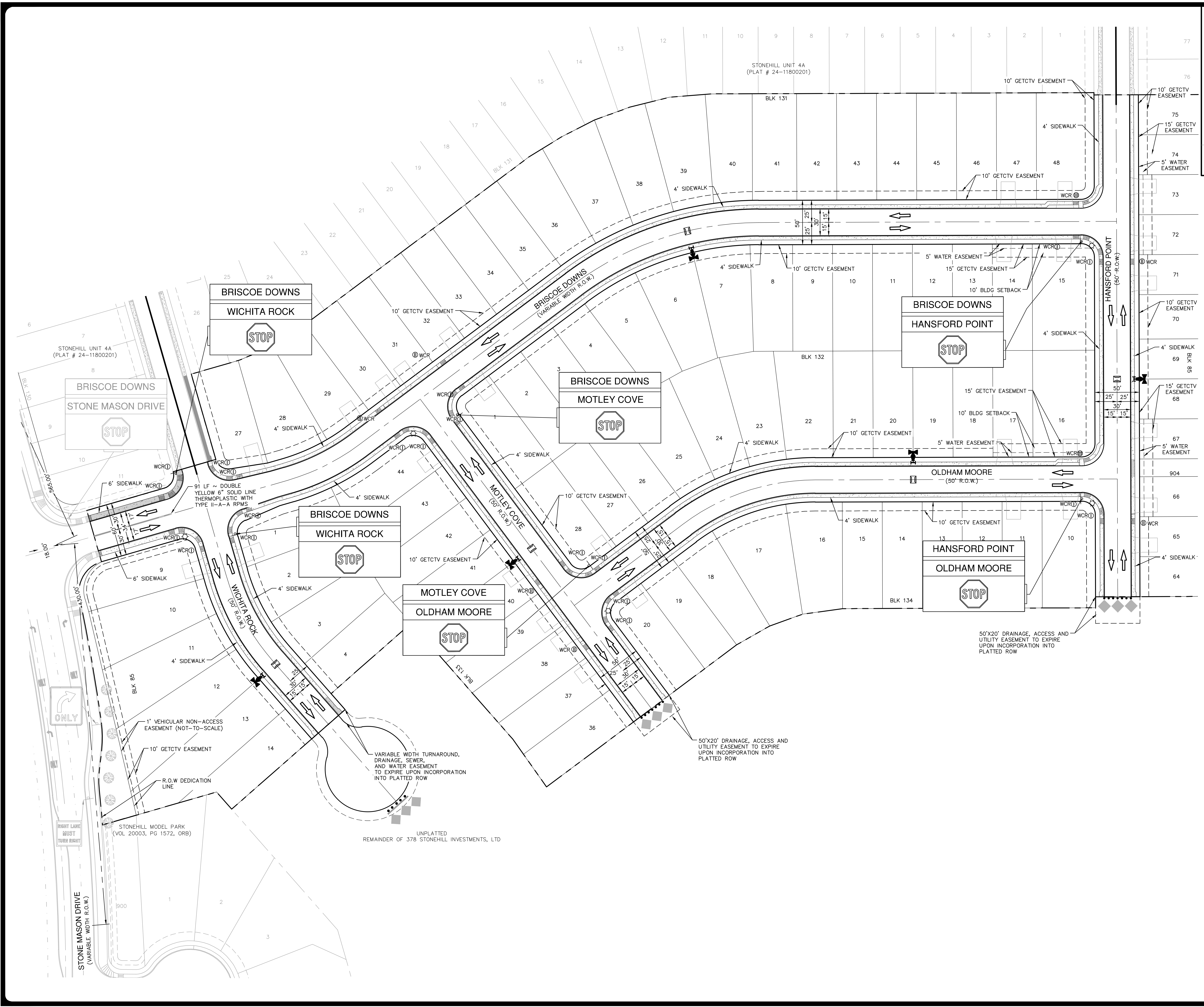
STONEHILL UNIT 4A
(PLAT # 24-11800201)
BLK 131
BLK 132
BLK 133
BLK 134
BLK 85
BRISCOE DOWNS
(VARIABLE WIDTH R.O.W.)
HANSFORD POINT
(50' R.O.W.)
OLDHAM MOORE
(50' R.O.W.)
MOTLEY COVE
(50' R.O.W.)
WICHITA ROCK
(50' R.O.W.)
STONE MASON DRIVE
(VARIABLE WIDTH R.O.W.)
BRISCOE DOWNS
WICHITA ROCK
STOP
BRISCOE DOWNS
STONE MASON DRIVE
STOP
BRISCOE DOWNS
MOTLEY COVE
STOP
BRISCOE DOWNS
HANSFORD POINT
STOP
BRISCOE DOWNS
WICHITA ROCK
STOP
MOTLEY COVE
OLDHAM MOORE
STOP
HANSFORD POINT
OLDHAM MOORE
STOP
10' GETCTV EASEMENT
15' GETCTV EASEMENT
5' WATER EASEMENT
10' BLDG SETBACK
4' SIDEWALK
6' SIDEWALK
WCR
91 LF ~ DOUBLE YELLOW 6" SOLID LINE THERMOPLASTIC WITH TYPE II-A-A RPMS
1' VEHICULAR NON-ACCESS EASEMENT (NOT-TO-SCALE)
R.O.W DEDICATION LINE
VARIABLE WIDTH TURNAROUND, DRAINAGE, SEWER, AND WATER EASEMENT TO EXPIRE UPON INCORPORATION INTO PLATTED ROW
50'X20' DRAINAGE, ACCESS AND UTILITY EASEMENT TO EXPIRE UPON INCORPORATION INTO PLATTED ROW
STONEHILL MODEL PARK
(VOL 20003, PG 1572, ORB)
UNPLATTED
REMAINDER OF 378 STONEHILL INVESTMENTS, LTD
ONLY
RIGHT LANE MUST TURN RIGHT
565.00'
430.00'
18.00'
904
90D

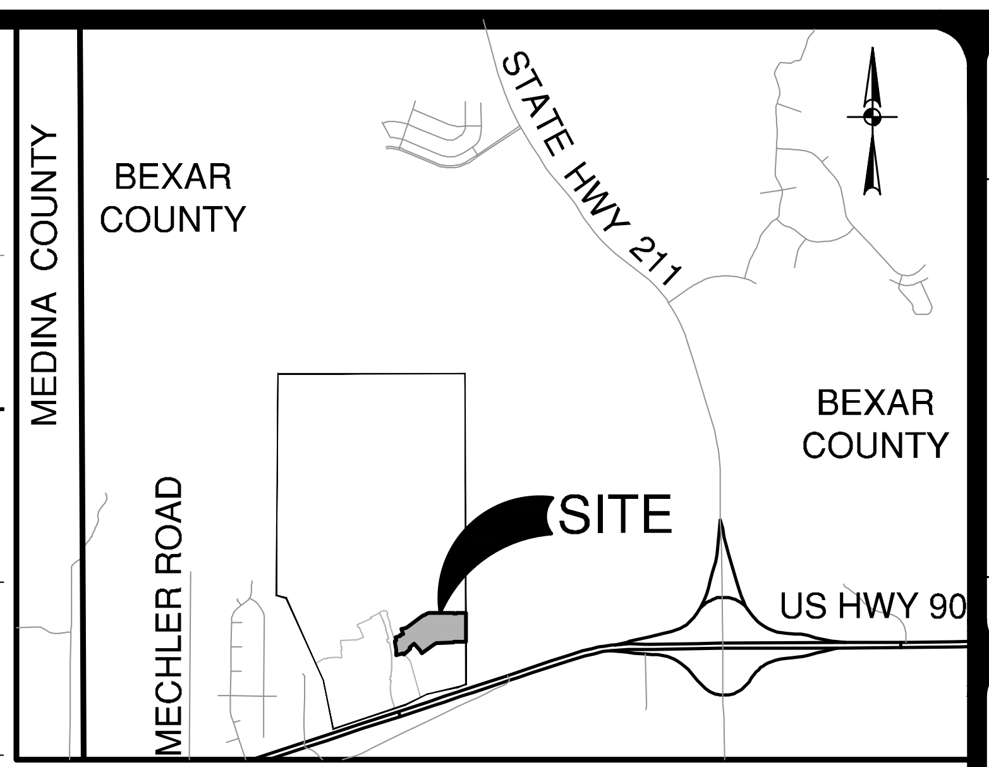
MEDINA COUNTY
BEXAR COUNTY
BEXAR COUNTY
STATE HWY 211
SITE
MECHLER ROAD
US HWY 90

LOCATION MAP
NOT-TO-SCALE

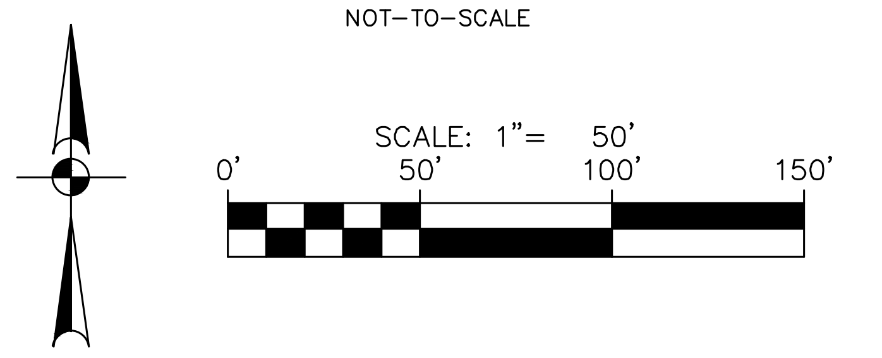
SCALE: 1"= 50'
0'
50'
100'
150'

SYMBOL		ITEM NUMBER
— — —	UNIT BOUNDARY	
	PROPOSED DRIVEWAY	
⇨	TRAFFIC FLOW ARROW	
	SIDEWALK (HOMEBUILDER RESPONSIBILITY)	
	SIDEWALK (SITEWORK DEVELOPER RESPONSIBILITY)	
	TYPE II BLUE RAISED PAVEMENT MARKERS – NO SEPARATE PAY ITEM (N.T.S.)	
◆◆◆	END OF ROAD MARKER OM4-3	
	HEADER CURB W/ BARRICADE POSTS	
STOP	R1-1 30"X30"	531.3
Street Name	STREET SIGN	531.57
	5'x5' ADA PASSING SPACE (HOMEOWNER'S RESPONSIBILITY)	
	5'x5' ADA PASSING SPACE (DEVELOPER'S RESPONSIBILITY)	

BEXAR COUNTY ROW NOTES:

A BEXAR COUNTY ROW PERMIT MUST BE OBTAINED BEFORE WORKING IN BEXAR COUNTY ROW. CONTRACTOR SHALL COORDINATE A TRAFFIC CONTROL PLAN FOR ALL WORK WITHIN THE ROW. ADDITIONAL WARNING SIGNS MAY BE RECOMMENDED BY THE ENGINEER ONCE THE ROADWAYS ARE CONSTRUCTED.

DRIVEWAY NOTE:

DRIVEWAYS SHOWN ON THIS PLAN ARE FOR THE SOLE PURPOSE OF INDICATING A POTENTIAL CONFLICT WITH CURB RAMP, DRAINAGE INFRASTRUCTURE, OR OTHER CONFLICT. DRIVEWAY LOCATION IS SUBJECT TO CHANGE BASED ON HOME SELECTION AND FINAL LOT DESIGN.

TRENCH EXCAVATION SAFETY PROTECTION:

CONTRACTOR AND/ OR CONTRACTOR'S INDEPENDENTLY RETAINED EMPLOYEE OR STRUCTURAL DESIGN/ GEOTECHNICAL/ SAFETY/EQUIPMENT CONSULTANT, IF ANY, SHALL REVIEW THESE PLANS AND ANY AVAILABLE GEOTECHNICAL INFORMATION AND THE ANTICIPATED INSTALLATION SITES WITHIN THE PROJECT WORK AREA IN ORDER TO IMPLEMENT CONTRACTOR'S TRENCH EXCAVATION SAFETY PROTECTION SYSTEMS, PROGRAMS AND /OR PROCEDURES FOR THE PROJECT DESCRIBED IN THE CONTRACT DOCUMENTS. THE CONTRACTOR'S IMPLEMENTATION OF THESE SYSTEMS, PROGRAMS AND/OR PROCEDURES SHALL PROVIDE FOR ADEQUATE TRENCH EXCAVATION SAFETY PROTECTION THAT COMPLY WITH AS A MINIMUM, OSHA STANDARDS FOR TRENCH EXCAVATIONS. SPECIFICALLY, CONTRACTOR AND/OR CONTRACTOR'S INDEPENDENTLY RETAINED EMPLOYEE OR SAFETY CONSULTANT SHALL IMPLEMENT A TRENCH SAFETY PROGRAM IN ACCORDANCE WITH OSHA STANDARDS GOVERNING THE PRESENCE AND ACTIVITIES OF INDIVIDUALS WORKING IN AND AROUND TRENCH EXCAVATION.

NO.	REVISION	DATE

CALEB M. CHANCE
98401
Caleb Chance 5/29/25

PAPE-DAWSON ENGINEERS
2000 NW LOOP 410 I SAN ANTONIO, TX 78213 I 210.375.9000
TEXAS ENGINEERING FIRM #470 I TEXAS SURVEYING FIRM #10028800

STONEHILL UNITS 2B & 6A
SAN ANTONIO, TEXAS

OVERALL SIGNAGE PLAN

PLAT NO. 24-11800312
JOB NO. 12456-13
DATE JULY 2024
DESIGNER RA
CHECKED BL DRAWN EG
SHEET C3.00

Date: May 30, 2025, 9:03am User ID: ralvarez
File: P:\124\56\13\Design\Civil\SGOA-1245613.dwg

SIGN SUPPORT DESCRIPTIVE CODES

(Descriptive Codes correspond to project estimate and quantities sheets)

SM RD SGN ASSM TY XXXXX(X)XX(X-XXXX)

Post Type
- FRP = Fiberglass Reinforced Plastic Pipe (see SMD(FRP))
- TWT = Thin-Walled Tubing (see SMD(TWT))
- 10BWG = 10 BWG Tubing (see SMD(SLIP-1) to (SLIP-3))
- S80 = Schedule 80 Pipe (see SMD(SLIP-1) to (SLIP-3))

Number of Posts (1 or 2)

Anchor Type
- UA = Universal Anchor - Concreted (see SMD(FRP) and (TWT))
- UB = Universal Anchor - Bolted down (see SMD(FRP) and (TWT))
- WS = Wedge Anchor Steel - (see SMD(TWT))
- WP = Wedge Anchor Plastic (see SMD(TWT))
- SA = Slipbase - Concreted (see SMD(SLIP-1) to (SLIP-3))
- SB = Slipbase - Bolted Down (see SMD(SLIP-1) to (SLIP-3))

Sign Mounting Designation
- P = Prefab. "Plain" (see SMD(SLIP-1) to (SLIP-3), (TWT), (FRP))
- T = Prefab. "T" (see SMD(SLIP-1) to (SLIP-3), (TWT))
- U = Prefab. "U" (see SMD(SLIP-1) to (SLIP-3))
- IF REQUIRED
- 1EXT or 2EXT = Number of Extensions (see SMD(SLIP-1) to (SLIP-3), (TWT))
- BM = Extruded Wind Beam (see SMD(SLIP-1) to (SLIP-3))
- WC = 1.12 #/ft Wing Channel (see SMD(SLIP-1) to (SLIP-3))
- EXAL = Extruded Aluminum Sign Panels (see SMD(SLIP-3))

REQUIRED CLEARANCE FOR BREAKAWAY SUPPORT

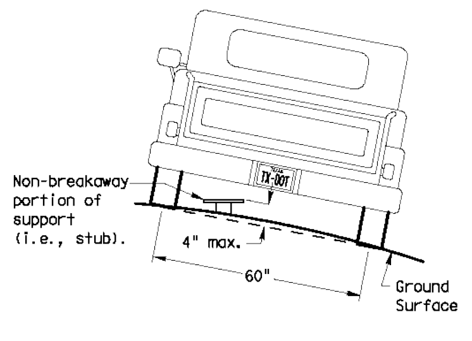
Non-breakaway portion of support (i.e., stub).
4" max.
60"
Ground Surface
TX-DOT

To avoid vehicle undercarriage snagging, any substantial remains of a breakaway support, when it is broken away, should not project more than 4 inches above a 60-inch chord (i.e., typical space between wheel paths).

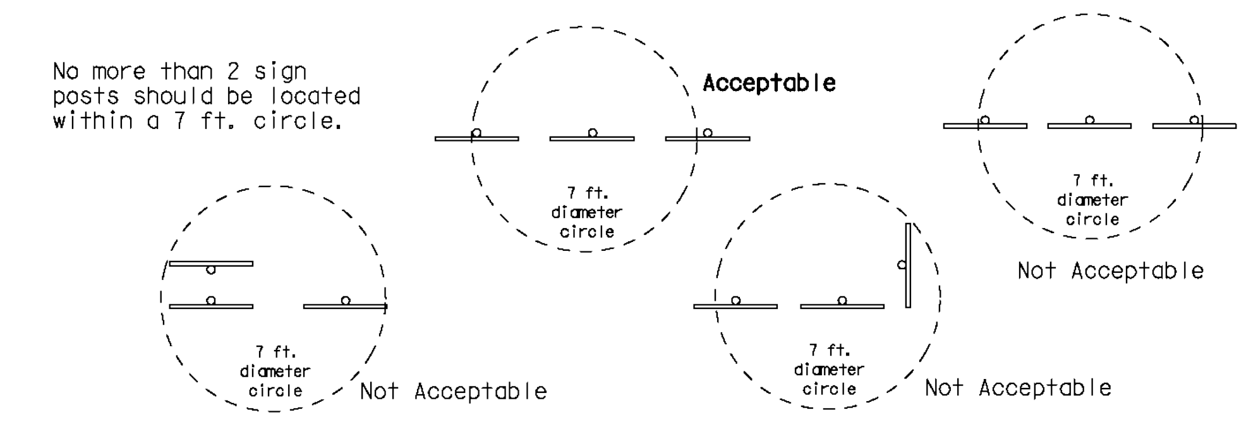
No more than 2 sign posts should be located within a 7 ft. circle.
Acceptable
7 ft. diameter circle
Not Acceptable
7 ft. diameter circle
Not Acceptable

SIGN LOCATION

PAVED SHOULDERS

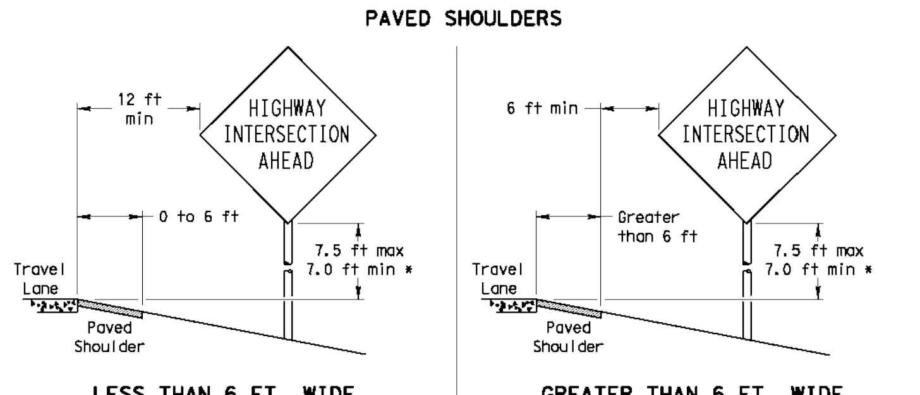
12 ft min
HIGHWAY INTERSECTION AHEAD
0 to 6 ft
7.5 ft max
7.0 ft min *
Travel Lane
Paved Shoulder
6 ft min
Greater than 6 ft
T-INTERSECTION

LESS THAN 6 FT. WIDE

When the shoulder is 6 ft. or less in width, the sign must be placed at least 12 ft. from the edge of the travel lane.

GREATER THAN 6 FT. WIDE

When the shoulder is greater than 6 ft in width, the sign must be placed at least 6 ft. from the edge of the shoulder.

T-INTERSECTION

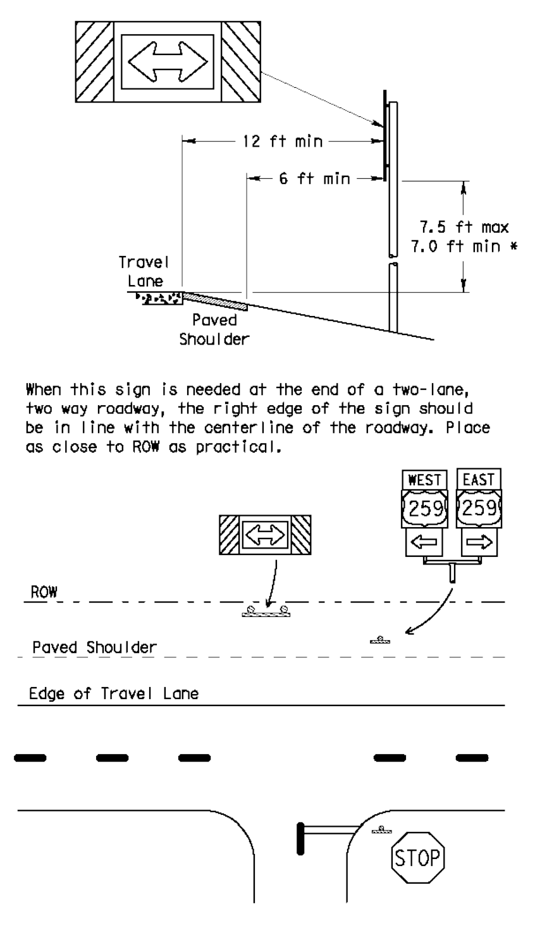
12 ft min
6 ft min
7.5 ft max
7.0 ft min *
Travel Lane
Paved Shoulder
WEST 259
EAST 259
ROW
Paved Shoulder
Edge of Travel Lane
STOP

When this sign is needed at the end of a two-lane, two way roadway, the right edge of the sign should be in line with the centerline of the roadway. Place as close to ROW as practical.

BEHIND BARRIER

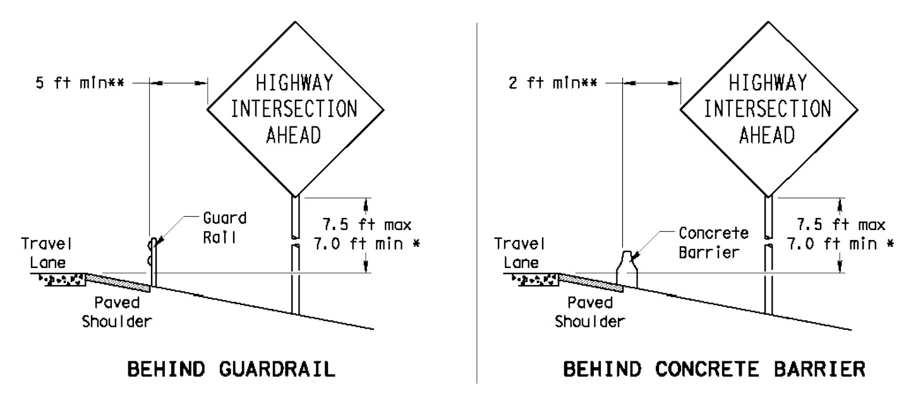
5 ft min**
HIGHWAY INTERSECTION AHEAD
Guard Rail
7.5 ft max
7.0 ft min *
Travel Lane
Paved Shoulder
BEHIND GUARDRAIL
2 ft min**
Concrete Barrier
BEHIND CONCRETE BARRIER

**Sign clearance based on deflection required for proper guard rail or concrete barrier performance.

* Signs shall be mounted using the following condition that results in the greatest sign elevation:

(1) a minimum of 7 to a maximum of 7.5 feet above the edge of the travel lane or

(2) a minimum of 7 to a maximum of 7.5 feet above the grade at the base of the support when sign is installed on the backslope.

The maximum values may be increased when directed by the Engineer.

See the Traffic Operations Division website for detailed drawings of sign clamps, Triangular Slipbase System components and Wedge Anchor System components.

The website address is:
http://www.txdot.gov/publications/traffic.htm

TYPICAL SIGN ATTACHMENT DETAIL

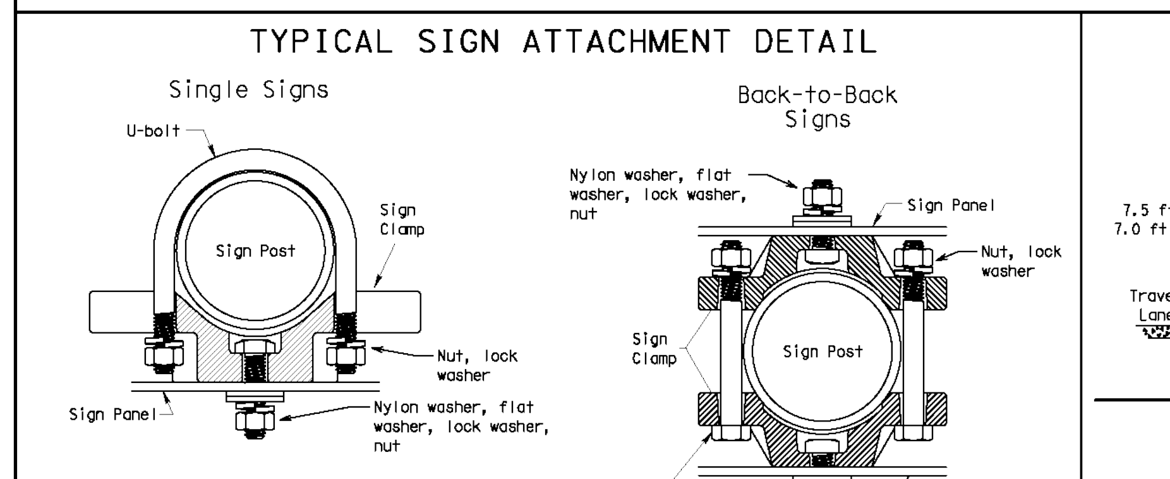
Single Signs
U-bolt
Sign Post
Sign Clamp
Nut, lock washer
Sign Panel
Nylon washer, flat washer, lock washer, nut
Back-to-Back Signs
Sign Panel
Nut, lock washer
Sign Clamp
Sign Post
Clamp Bolt
Sign Bolt

Bolts used to mount sign panels to the clamp are 5/16-18 UNC galvanized square head with nut, nylon washer, flat washer and lock washer. The bolt length is 1 inch for aluminum.

When two sign clamps are used to mount signs back-to-back, use a 5/16-18 UNC galvanized hex head per ASTM A307 with nut and helical-spring lock washer. The approximate bolt lengths for various post sizes and sign clamp types are given in the table at right. The bolt length may need to be adjusted depending upon field conditions.

Sign clamps may be either the specific size clamp or the universal clamp.

Pipe Diameter	Approximate Bolt Length	
	Specific Clamp	Universal Clamp
2" nominal	3"	3 or 3 1/2"
2 1/2" nominal	3 or 3 1/2"	3 1/2 or 4"
3" nominal	3 1/2 or 4"	4 1/2"

SIGNS WITH PLAQUES

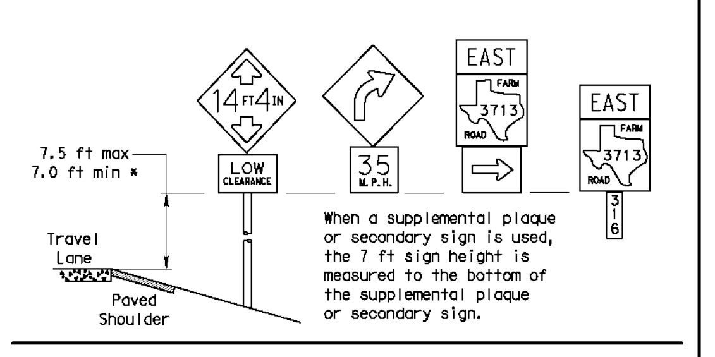
7.5 ft max
7.0 ft min *
Travel Lane
Paved Shoulder
LOW CLEARANCE
35
EAST
EAST

When a supplemental plaque or secondary sign is used, the 7 ft sign height is measured to the bottom of the supplemental plaque or secondary sign.

CURB & GUTTER OR RAISED ISLAND

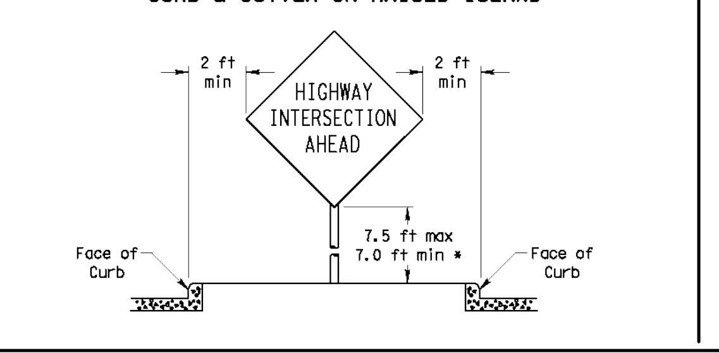
2 ft min
2 ft min
HIGHWAY INTERSECTION AHEAD
7.5 ft max
7.0 ft min *
Face of Curb
Face of Curb

RESTRICTED RIGHT-OF-WAY

(When 6 ft min. is not possible.)

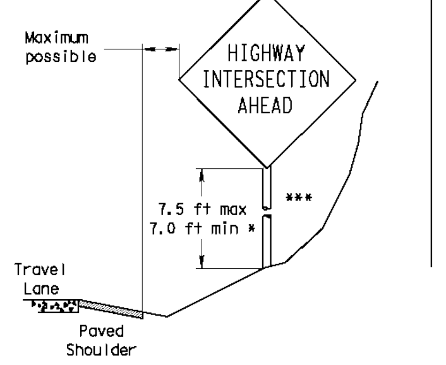
Maximum possible
HIGHWAY INTERSECTION AHEAD
***
7.5 ft max
7.0 ft min *
Travel Lane
Paved Shoulder

Right-of-way restrictions may be created by rocks, water, vegetation, forest, buildings, a narrow island, or other factors.

In situations where a lateral restriction prevents the minimum horizontal clearance from the edge of the travel lane, signs should be placed as far from the travel lane as practical.

*** Post may be shorter if protected by guardrail or if Engineer determines the post could not be hit due to extreme slope.

Texas Department of Transportation
Traffic Operations Division

SIGN MOUNTING DETAILS
SMALL ROADSIDE SIGNS
GENERAL NOTES & DETAILS

SMD(GEN)-08

©TxDOT July 2002	DN: TXDOT	CK: TXDOT	DW: TXDOT	CK: TXDOT
9-08 REVISIONS	CONT	SECT	JOB	HIGHWAY
	DIST	COUNTY		SHEET NO.

26A

TRIANGULAR SLIPBASE INSTALLATION GENERAL REQUIREMENTS

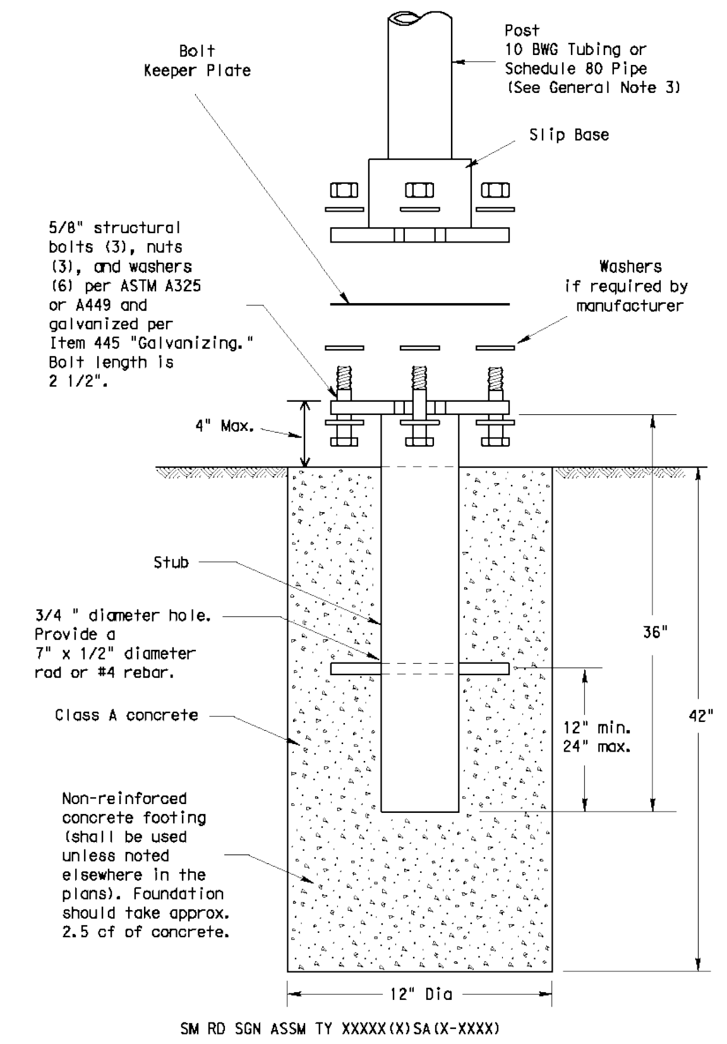
Post
10 BWG Tubing or Schedule 80 Pipe (See General Note 3)
Bolt Keeper Plate
Slip Base
5/8" structural bolts (3), nuts (3), and washers (6) per ASTM A325 or A449 and galvanized per Item 445 "Galvanizing." Bolt length is 2 1/2".
Washers if required by manufacturer
4" Max.
Stub
3/4" diameter hole. Provide a 7" x 1/2" diameter rod or #4 rebar.
Class A concrete
36"
42"
12" min. 24" max.
Non-reinforced concrete footing (shall be used unless noted elsewhere in the plans). Foundation should take approx. 2.5 cf of concrete.
12" Dia
SM RD SGN ASSM TY XXXXX(X)SA(X-XXXX)

NOTE

There are various devices approved for the Triangular Slipbase System. Please reference the Material Producer List for approved slip base systems. http://www.txdot.gov/business/producer_list.htm The devices shall be installed per manufacturers' recommendations. Installation procedures shall be provided to the Engineer by Contractor.

GENERAL NOTES:

1. Slip base shall be permanently marked to indicate manufacturer. Method, design, and location of marking are subject to approval of the TxDOT Traffic Standards Engineer.
2. Material used as post with this system shall conform to the following specifications:
   - 10 BWG Tubing (2.875" outside diameter)
     - 0.134" nominal wall thickness
     - Seamless or electric-resistance welded steel tubing or pipe
     - Steel shall be HSLAS Gr 55 per ASTM A1011 or ASTM A1008
     - Other steels may be used if they meet the following:
       - 55,000 PSI minimum yield strength
       - 70,000 PSI minimum tensile strength
       - 20% minimum elongation in 2"
     - Wall thickness (uncoated) shall be within the range of 0.122" to 0.138"
     - Outside diameter (uncoated) shall be within the range of 2.867" to 2.883"
     - Galvanization per ASTM A123 or ASTM A653 G210. For precoated steel tubing (ASTM A653), recoat tube outside diameter weld seam by metallizing with zinc wire per ASTM B833.
   - Schedule 80 Pipe (2.875" outside diameter)
     - 0.276" nominal wall thickness
     - Steel tubing per ASTM A500 Gr C
     - Other seamless or electric-resistance welded steel tubing or pipe with equivalent outside diameter and wall thickness may be used if they meet the following:
       - 46,000 PSI minimum yield strength
       - 62,000 PSI minimum tensile strength
       - 21% minimum elongation in 2"
     - Wall thickness (uncoated) shall be within the range of 0.248" to 0.304"
     - Outside diameter (uncoated) shall be within the range of 2.855" to 2.895"
     - Galvanization per ASTM A123
3. See the Traffic Operations Division website for detailed drawings of sign clamps and Texas Universal Triangular Slipbase System components. The website address is: http://www.txdot.gov/publications/traffic.htm
4. Sign supports shall not be spliced except where shown. Sign support posts shall not be spliced.

ASSEMBLY PROCEDURE

Foundation
1. Prepare 12-inch diameter by 42-inch deep hole. If solid rock is encountered, the depth of the foundation may be reduced such that it is embedded a minimum of 18 inches into the solid rock.
2. The Engineer may permit batches of concrete less than 2 cubic yards to be mixed with a portable, motor-driven concrete mixer. For small placements less than 0.5 cubic yards, hand mixing in a suitable container may be allowed by Engineer. Concrete shall be Class A.
3. Push the pipe end of the slip base stub into the center of the concrete. Rotate the stub back and forth while pushing it down into the concrete to assure good contact between the concrete and stub. Continue to work the stub into the concrete until it is between 2 to 4 inches above the ground.
4. Plumb the stub. Allow a minimum of 4 days to set, unless otherwise directed by the Engineer.
5. The triangular slipbase system is multidirectional and is designed to release when struck from any direction.

Support
1. Cut support so that the bottom of the sign will be 7 to 7.5 feet above the edge of the travelway (i.e., edge of the closest lane) when slip plate is below the edge of pavement or 7 to 7.5 feet above slip plate when the slip plate is above the edge of the travelway. The cut shall be plumb and straight.
2. Attach sign to support using connections shown. When multiple signs are installed on the same support, ensure the minimum clearance between each sign is maintained. See SMD(SLIP-2) for clearances based on sign types.

CONCRETE ANCHOR

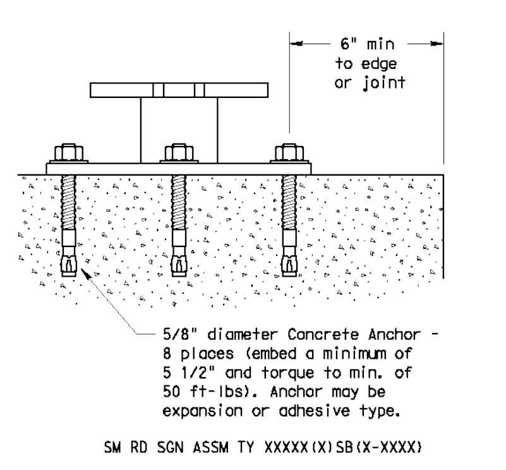
6" min to edge or joint
5/8" diameter Concrete Anchor - 8 places (embed a minimum of 5 1/2" and torque to min. of 50 ft-lbs). Anchor may be expansion or adhesive type.
SM RD SGN ASSM TY XXXXX(X)SB(X-XXXX)

Concrete anchor consists of 5/8" diameter stud bolt with UNC series bolt threads on the upper end. Heavy hex nut per ASTM A563, and hardened washer per ASTM F436. The stud bolt shall have a minimum yield and ultimate tensile strength of 50 and 75 KSI, respectively. Nuts, bolts and washers shall be galvanized per Item 445, "Galvanizing." Adhesive type anchors shall have stud bolts installed with Type III epoxy per DMS-6100, "Epoxies and Adhesives." Adhesive anchors may be loaded after adequate epoxy cure time per the manufacturer's recommendations. Top of bolt shall extend at least flush with top of the nut when installed. The anchor, when installed in 4000 psi normal-weight concrete with a 5 1/2" minimum embedment, shall have a minimum allowable tension and shear of 3900 and 3100 psi, respectively.

Texas Department of Transportation
Traffic Operations Division

SIGN MOUNTING DETAILS
SMALL ROADSIDE SIGNS
TRIANGULAR SLIPBASE SYSTEM

SMD(SLIP-1)-08

©TxDOT July 2002
9-08

26B

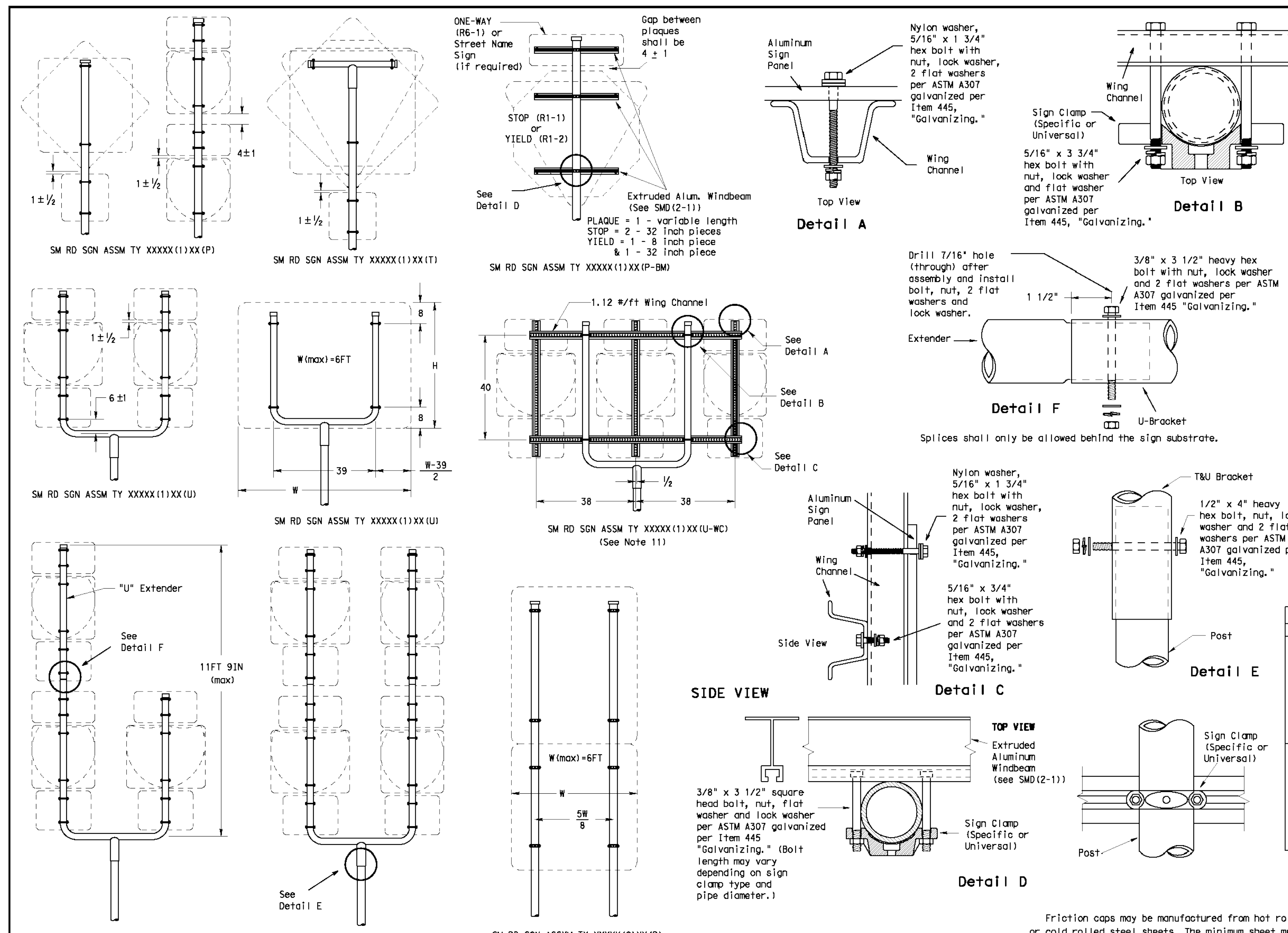
SM RD SGN ASSM TY XXXXX(1)XX(P)
ONE-WAY (R6-1) or Street Name Sign (if required)
Gap between plaques shall be 4 ± 1
STOP (R1-1) or YIELD (R1-2)
See Detail D
Extruded Alum. Windbeam (See SMD(2-1))
PLAQUE - 1 - 32 inch length
STOP - 2 - 32 inch pieces
YIELD - 1 - 8 inch piece & 1 - 32 inch piece
SM RD SGN ASSM TY XXXXX(1)XX(T)
SM RD SGN ASSM TY XXXXX(1)XX(P-BM)
Detail A
Detail B
SM RD SGN ASSM TY XXXXX(1)XX(U)
1.12 #/ft Wing Channel
See Detail A
See Detail B
See Detail C
SM RD SGN ASSM TY XXXXX(1)XX(U-WC) (See Note 11)
Detail F
Splices shall only be allowed behind the sign substrate.
Detail C
SIDE VIEW
Detail E
"U" Extender
See Detail F
SM RD SGN ASSM TY S80(1)XX(1-EXT)
SM RD SGN ASSM TY S80(1)XX(2-EXT)
SM RD SGN ASSM TY XXXXX(2)XX(P)
TOP VIEW
Detail D

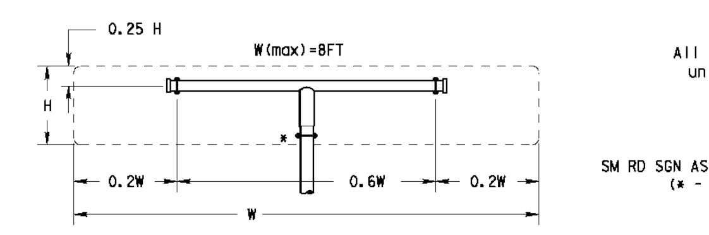
0.25 H
W(max)=8FT
0.2W
0.6W
0.2W
SM RD SGN ASSM TY XXXXX(1)XX(T) (* - See Note 12)

All dimensions are in English unless detailed otherwise.

FRICTION CAP DETAIL

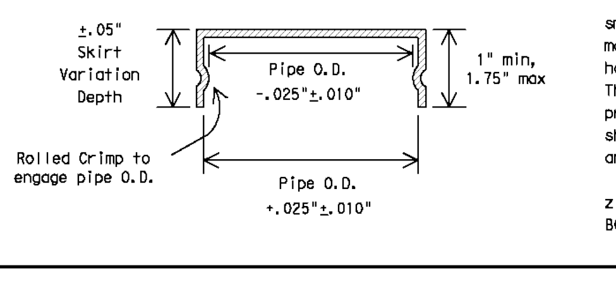
.05" Skirt Variation Depth
Pipe O.D. +.025"-.010"
1" min, 1.75" max
Rolled Crimp to engage pipe O.D.
Pipe O.D. +.025",-.010"

Friction caps may be manufactured from hot rolled or cold rolled steel sheets. The minimum sheet metal thickness shall be 24 gauge for all cap sizes.

The rim edges shall be reasonably straight and smooth. Caps shall be sized and formed in such a manner as to produce a drive-on friction fit and have no tendency to rock when seated on the pipe. The depth shall be sufficient to give positive protection against entrance of rainwater. They shall be free of sharp creases or indentations and show no evidence of metal fracture.

Caps shall have an electrodeposited coating of zinc in accordance with the requirements of ASTM B633 Class FE/ZN 8.

GENERAL NOTES:

1.

SIGN SUPPORT	# OF POSTS	MAX. SIGN AREA
10 BWG	1	16 SF
10 BWG	2	32 SF
Sch 80	1	32 SF
Sch 80	2	64 SF

2. The Engineer may require that a Schedule 80 post be used in place of a 10 BWG where a sign height is abnormally high due to a fill slope.
3. Sign supports shall not be spliced except where shown. Sign support posts shall not be spliced.
4. Aluminum sign blanks shall conform to Departmental Material Specifications DMS-7110 and shall have the following minimum thicknesses: 0.080 for signs less than 7.5 sq. ft., 0.100 for signs 7.5 to 15 sq. ft., and 0.125 for signs greater than 15 sq. ft.
5. Signs that require specific supports due to reasons in addition to windloading are indicated on the "REQUIRED SUPPORT" table on this sheet.
6. For horizontal rectangular signs fabricated from flat aluminum, T-brackets are used for signs 24 inches or less in height. U-brackets are used for signs of greater height.
7. When two triangular slipbase supports are used to support a single sign, they shall not be "rigidly" connected to each other except through the sign panel. This will allow each support to act independently when impacted by an errant vehicle.
8. Wing channel shall meet ASTM A 1011 SS Gr 50 and be galvanized per ASTM A 123.
9. Excess pipe, wing channel, or windbeam shall be cut off so that it does not extend beyond the sign panel (i.e., excess support shall not be visible when the sign is viewed from the front.) Repair galvanized coating at cut support ends per Item 445, "Galvanizing."
10. Additional route markers may be added vertically, provided the total sign area does not exceed the maximum allowable amount per Note 1.
11. Additional sign clamp required on the "T-bracket" post for 24 inch height signs. Place the clamp 3 inches above bottom of sign when possible.
12. Post open ends shall be fitted with Friction Caps.
13. Sign blanks shall be the sizes and shapes shown on the plans.

REQUIRED SUPPORT

	SIGN DESCRIPTION	SUPPORT
Regulatory	48-inch STOP sign (R1-1)	TY 10BWG(1)XX(T) TY 10BWG(1)XX(P-BM)
	60-inch YIELD sign (R1-2)	TY 10BWG(1)XX(T) TY 10BWG(1)XX(P-BM)
	48x16-inch ONE-WAY sign (R6-1)	TY 10BWG(1)XX(T) TY 10BWG(1)XX(P-BM)
	36x48, 48x36, and 48x48-inch signs	TY 10BWG(1)XX(T)
	48x60-inch signs	TY S80(1)XX(T)
Warning	48x48-inch signs (diamond or square)	TY 10BWG(1)XX(T)
	48x60-inch signs	TY S80(1)XX(T)
	48-inch Advance School X-ing sign (S1-1)	TY 10BWG(1)XX(T)
	48-inch School X-ing sign (S2-1)	TY 10BWG(1)XX(T)
	Large Arrow sign (W1-6 & W1-7)	TY 10BWG(1)XX(T)

Texas Department of Transportation
Traffic Operations Division

SIGN MOUNTING DETAILS
SMALL ROADSIDE SIGNS
TRIANGULAR SLIPBASE SYSTEM

SMD(SLIP-2)-08

©TxDOT July 2002
9-08

26C

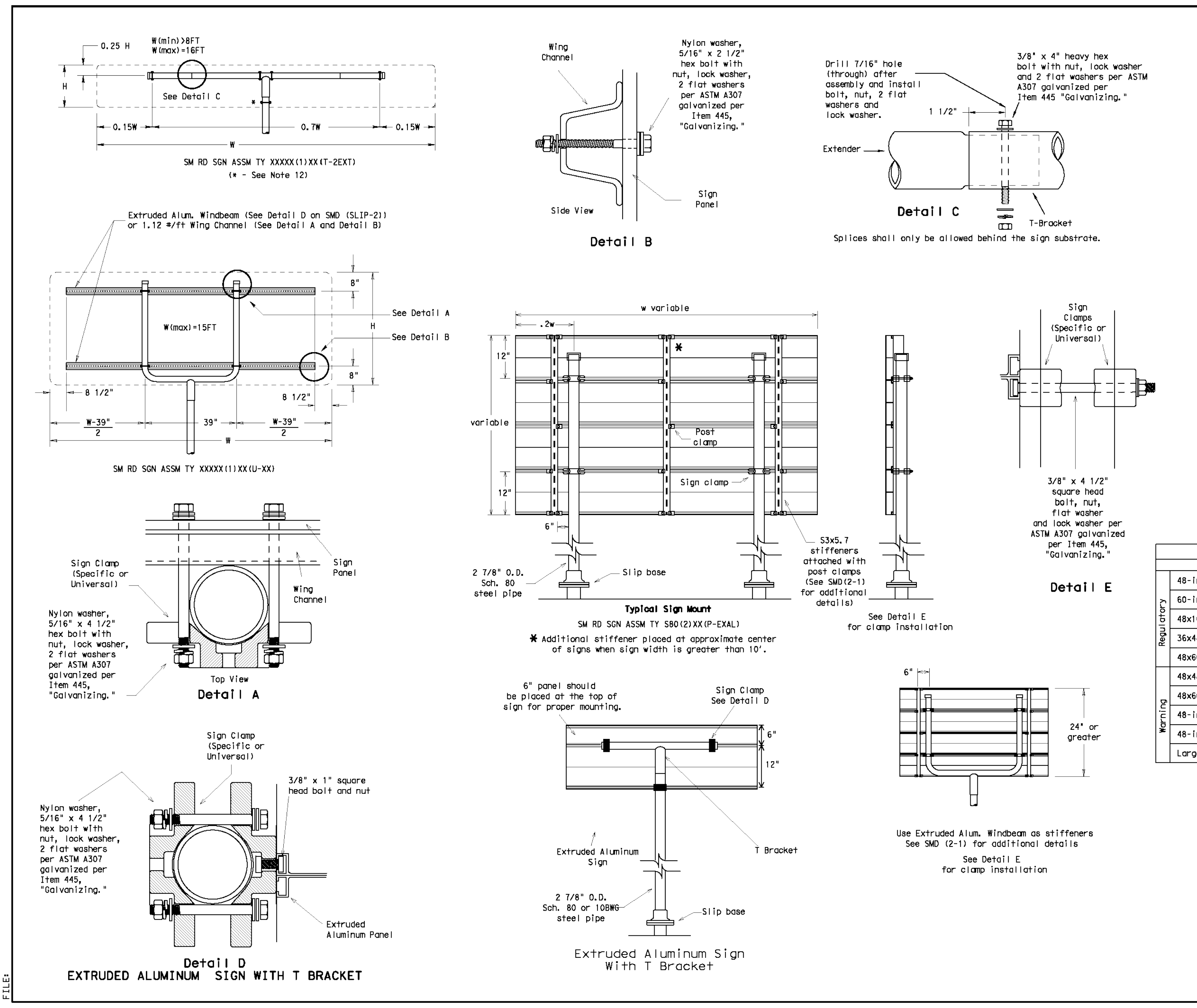
W(min)=3FT
W(max)=8FT
0.25 H
See Detail C
0.15W
0.7W
0.15W
SM RD SGN ASSM TY XXXXX(1)XX(T-2EXT) (* - See Note 12)
Extruded Alum. Windbeam (See Detail D and SMD (SLIP-2)) or 1.12 #/ft Wing Channel (See Detail A and Detail B)
W(max)=15FT
See Detail A
See Detail B
SM RD SGN ASSM TY XXXXX(2)XX(U-XX)
Sign Clamp (Specific or Universal)
Sign Panel
Wing Channel
Top View
Detail A
Detail B
Detail C
Splices shall only be allowed behind the sign substrate.
W variable
Post clamp
Sign clamp
Slip base
2 7/8" O.D. Sch. 80 steel pipe
Typical Sign Mount
SM RD SGN ASSM TY S80(2)XX(P-EXAL)
* Additional stiffener placed at approximate center of signs when sign width is greater than 10'.
S3x5.7 stiffeners attached with post clamps (See SMD(2-1) for additional details)
See Detail E for clamp installation
Detail E
6" panel should be placed at the top of sign for proper mounting.
Sign Clamp See Detail D
Extruded Aluminum Sign
T Bracket
Slip base
2 7/8" O.D. Sch. 80 or 10BWG steel pipe
Extruded Aluminum Panel
Detail D
EXTRUDED ALUMINUM SIGN WITH T BRACKET
Extruded Aluminum Sign With T Bracket
24" or greater
Use Extruded Alum. Windbeam as stiffeners See SMD (2-1) for additional details
See Detail E for clamp installation

GENERAL NOTES:

1.

SIGN SUPPORT	# OF POSTS	MAX. SIGN AREA
10 BWG	1	16 SF
10 BWG	2	32 SF
Sch 80	1	32 SF
Sch 80	2	64 SF

2. The Engineer may require that a Schedule 80 post be used in place of a 10 BWG where a sign height is abnormally high due to a fill slope.
3. Sign supports shall not be spliced except where shown. Sign support posts shall not be spliced.
4. Aluminum sign blanks shall conform to Departmental Material Specifications DMS-7110 and shall have the following minimum thicknesses: 0.080 for signs less than 7.5 sq. ft., 0.100 for signs 7.5 to 15 sq. ft., and 0.125 for signs greater than 15 sq. ft.
5. Signs that require specific supports due to reasons in addition to windloading are indicated on the "REQUIRED SUPPORT" table on this sheet.
6. For horizontal rectangular signs fabricated from flat aluminum, T-brackets are used for signs 24 inches or less in height. U-brackets are used for signs of greater height.
7. When two triangular slipbase supports are used to support a single sign, they shall not be "rigidly" connected to each other except through the sign panel. This will allow each support to act independently when impacted by an errant vehicle.
8. Wing channel shall meet ASTM A 1011 SS Gr 50 and be galvanized per ASTM A 123.
9. Excess pipe, wing channel, or windbeam shall be cut off so that it does not extend beyond the sign panel (i.e., excess support shall not be visible when the sign is viewed from the front.) Repair galvanized coating at cut support ends per Item 445, "Galvanizing."
10. Sign blanks shall be the sizes and shapes shown on the plans.
11. Additional sign clamp required on the "T-bracket" post for 24 inch height signs. Place the clamp 3 inches above bottom of sign when possible.
12. Post open ends shall be fitted with Friction Caps.

REQUIRED SUPPORT

	SIGN DESCRIPTION	SUPPORT
Regulatory	48-inch STOP sign (R1-1)	TY 10BWG(1)XX(T) TY 10BWG(1)XX(P-BM)
	60-inch YIELD sign (R1-2)	TY 10BWG(1)XX(T) TY 10BWG(1)XX(P-BM)
	48x16-inch ONE-WAY sign (R6-1)	TY 10BWG(1)XX(T) TY 10BWG(1)XX(P-BM)
	36x48, 48x36, and 48x48-inch signs	TY 10BWG(1)XX(T)
	48x60-inch signs	TY S80(1)XX(T)
Warning	48x48-inch signs (diamond or square)	TY 10BWG(1)XX(T)
	48x60-inch signs	TY S80(1)XX(T)
	48-inch Advance School X-ing sign (S1-1)	TY 10BWG(1)XX(T)
	48-inch School X-ing sign (S2-1)	TY 10BWG(1)XX(T)
	Large Arrow sign (W1-6 & W1-7)	TY 10BWG(1)XX(T)

Texas Department of Transportation
Traffic Operations Division

SIGN MOUNTING DETAILS
SMALL ROADSIDE SIGNS
TRIANGULAR SLIPBASE SYSTEM

SMD(SLIP-3)-08

©TxDOT July 2002
9-08

26D

DISCLAIMER: The use of this standard is governed by the "Texas Engineering Practice Act". No warranty of any kind is made by TxDOT for any purpose whatsoever. TxDOT assumes no responsibility for the conversion of this standard to other formats or for incorrect results or damages resulting from its use.

NO. | REVISION | DATE

STATE OF TEXAS
CALEB M. CHANCE
98401
LICENSED PROFESSIONAL ENGINEER
8/2/24

PAPE-DAWSON ENGINEERS
2000 NW LOOP 410 | SAN ANTONIO, TX 78213 | 210.375.9000
TEXAS ENGINEERING FIRM #470 | TEXAS SURVEYING FIRM #10028800

STONEHILL UNITS 2B & 6A
SAN ANTONIO, TEXAS

SIGNAGE DETAILS SHEET 1 OF 2

PLAT NO. 24-11800312
JOB NO. 12456–13
DATE JULY 2024
DESIGNER RA
CHECKED BL DRAWN EG
SHEET C3.10

Date: Aug 13, 2024, 7:57am User ID: ralvarez
File: P:\124\56\13\Design\Civil\SGDT-1245613.dwg

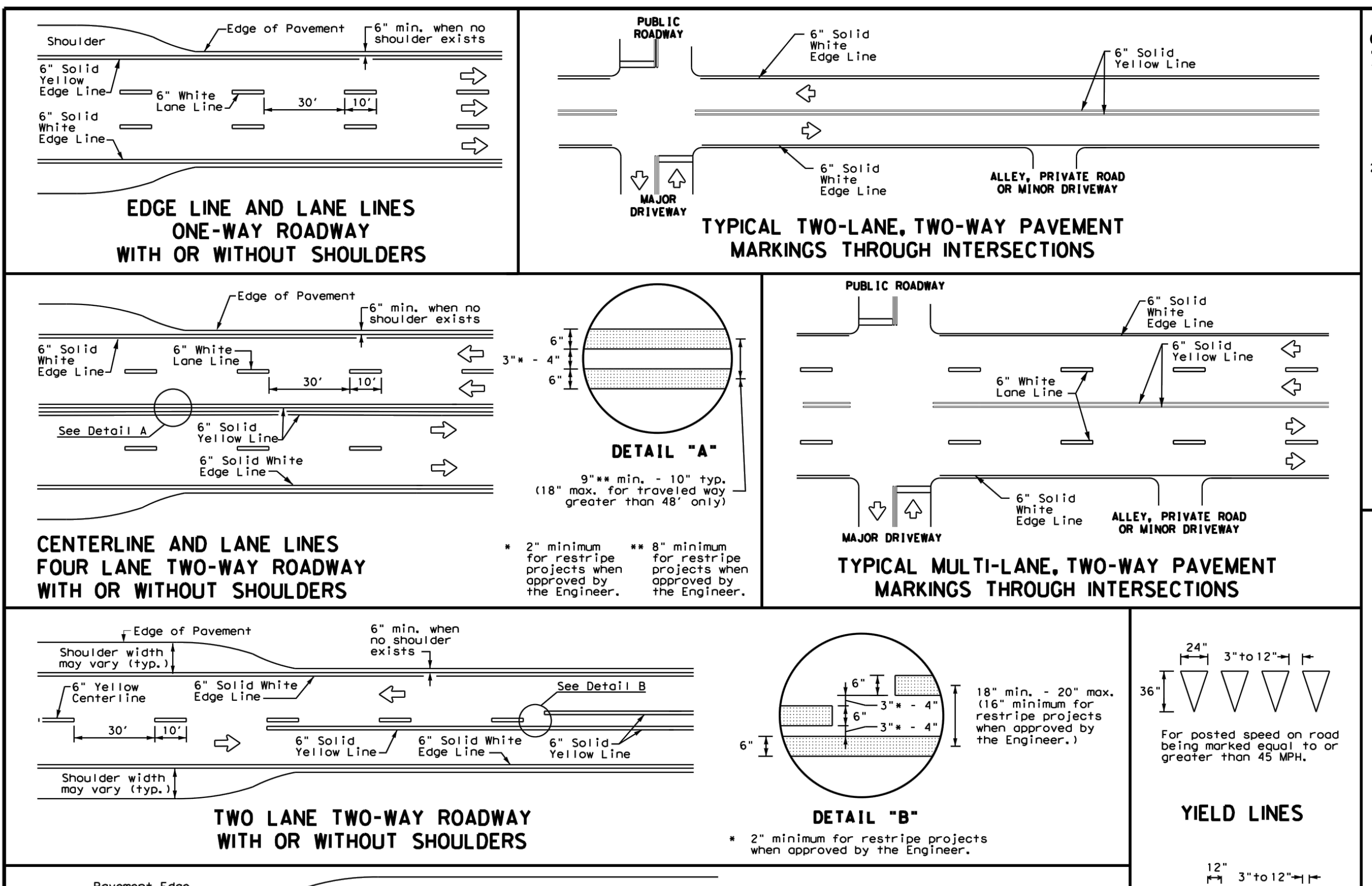
EDGE LINE AND LANE LINES
ONE-WAY ROADWAY
WITH OR WITHOUT SHOULDERS
TYPICAL TWO-LANE, TWO-WAY PAVEMENT
MARKINGS THROUGH INTERSECTIONS
CENTERLINE AND LANE LINES
FOUR LANE TWO-WAY ROADWAY
WITH OR WITHOUT SHOULDERS
DETAIL "A"
TYPICAL MULTI-LANE, TWO-WAY PAVEMENT
MARKINGS THROUGH INTERSECTIONS
TWO LANE TWO-WAY ROADWAY
WITH OR WITHOUT SHOULDERS
DETAIL "B"

* 2" minimum for restripe projects when approved by the Engineer.

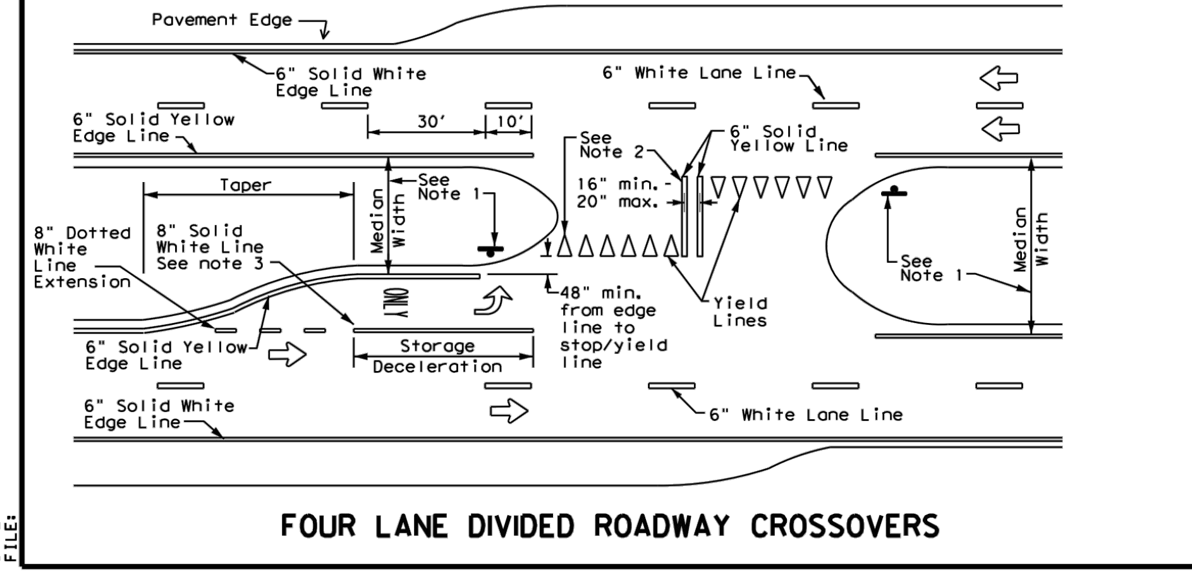
FOUR LANE DIVIDED ROADWAY CROSSOVERS

GENERAL NOTES

1. Edge line striping shall be as shown in the plans or as directed by the Engineer. The edge line should not be placed less than 6 inches from the edge of pavement. This distance may vary due to pavement raveling or other conditions. Edge lines are not required in curb and gutter sections of roadways.

2. The traveled way includes only that portion of the roadway used for vehicular travel. It does not include the parking lanes, sidewalks, berms and shoulders. The traveled ways shall be measured from the center of edge line to the center of edge line of a two lane roadway.

MATERIAL SPECIFICATIONS	
PAVEMENT MARKERS (REFLECTORIZED)	DMS-4200
EPOXY AND ADHESIVES	DMS-6100
BITUMINOUS ADHESIVE FOR PAVEMENT MARKERS	DMS-6130
TRAFFIC PAINT	DMS-8200
HOT APPLIED THERMOPLASTIC	DMS-8220
PERMANENT PREFABRICATED PAVEMENT MARKINGS	DMS-8240

All pavement marking materials shall meet the required Departmental Material Specifications as specified by the plans.

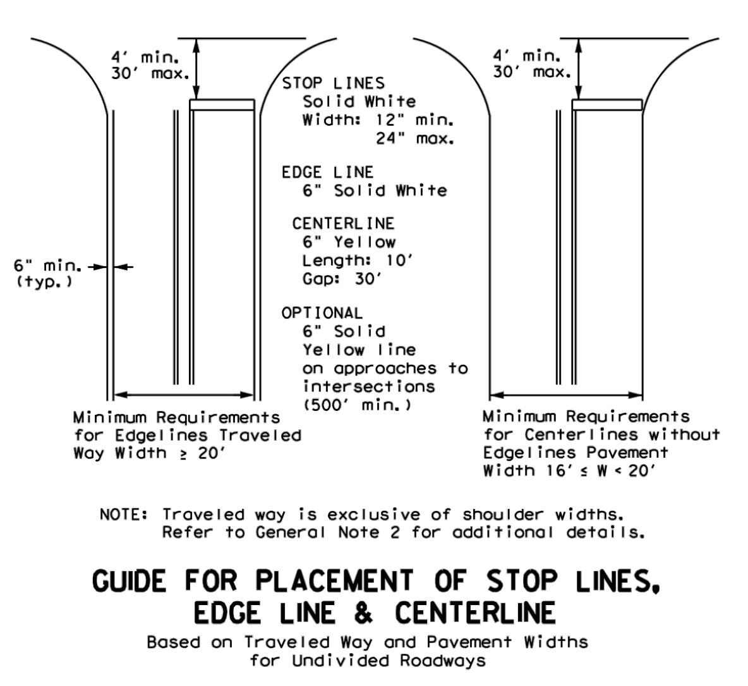
STOP LINES
Solid White
Width: 12" min.
24" max.
EDGE LINE
6" Solid White
YIELD LINES
For posted speed on road being marked equal to or greater than 45 MPH.
For posted speed on road being marked equal to or less than 40 MPH.
Minimum Requirements for Edgelines Traveled Way Width ≥ 20'
Minimum Requirements for Centerlines without Edgelines Pavement Width 16' ≤ W < 20'

NOTE: Traveled way is exclusive of shoulder widths. Refer to General Note 2 for additional details.

GUIDE FOR PLACEMENT OF STOP LINES, EDGE LINE & CENTERLINE

Based on Traveled Way and Pavement Widths for Undivided Roadways

NOTES

1. Where divided highways are separated by median widths at the median opening itself of 30 feet or more, median openings shall be signed as two separate intersections. Each median opening has two width measurements, with one measurement for each approach. The narrow median width will be the controlling width to determine if signs are required. Yield signs are the typical intersection control. Stop signs and stop bars are optional as determined by the Engineer.

2. Install median striping (double yellow centerlines and stop lines/yield lines) when a 50' or greater median centerline can be placed. Stop lines shall only be used with stop signs. Yield lines shall only be used with yield signs.

3. Length of turn bays, including taper, deceleration, and storage lengths shall be as shown on the plans or as directed by the Engineer.

Texas Department of Transportation

Traffic Safety Division Standard

TYPICAL STANDARD PAVEMENT MARKINGS

PM(1)-22

FILE: pm1-22.dgn
© TxDOT December 2022
REVISIONS 11-78 8-00 8-95 3-03 5-00 2-12
22A

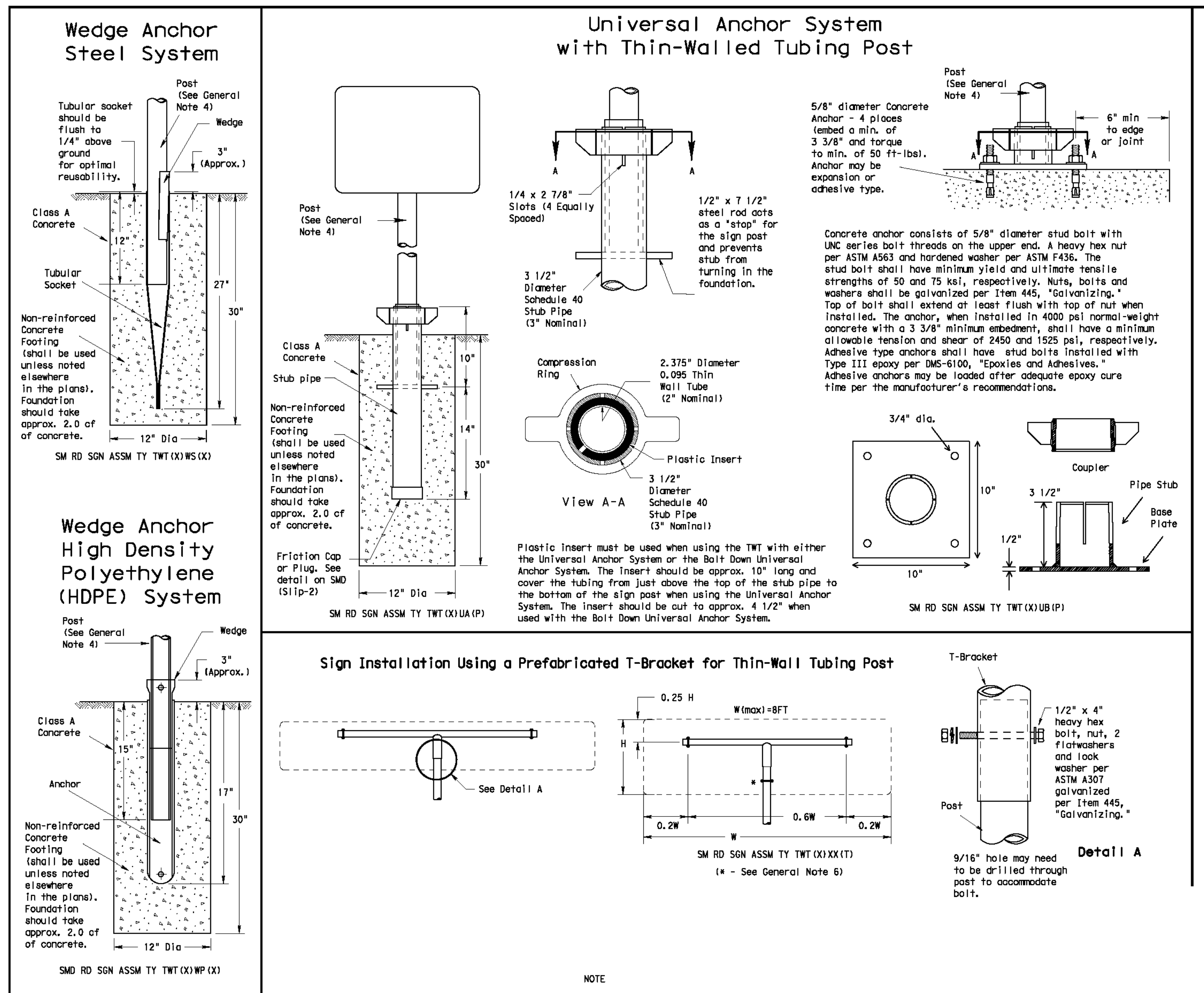
Wedge Anchor Steel System
Universal Anchor System with Thin-Walled Tubing Post
Wedge Anchor High Density Polyethylene (HDPE) System
Sign Installation Using a Prefabricated T-Bracket for Thin-Wall Tubing Post
Detail A
View A-A

NOTE

The devices shall be installed per manufacturer's recommendations. Installation procedures shall be provided to the Engineer by Contractor.

GENERAL NOTES:
1. The Wedge Anchor System and the Universal Anchor System with thin wall tubing post may be used to support up to 10 square feet of sign area.
2. The tubular socket, wedge and prefabricated T-bracket shall be permanently marked to indicate manufacturer. Method, design, and location of marking are subject to the approval of the TxDOT Traffic Standards Engineer.
3. Except for posts (13 BWG Tubing), clamps, nuts and bolts, all components shall be prequalified. A list of prequalified vendors may be obtained from the Material Producer List web page. The website address is: http://www.txdot.gov/business/producer list.htm
4. Material used as post with this system shall conform to the following specifications:
   - 13 BWG Tubing (2.375" outside diameter) (TWT)
     - 0.095" nominal wall thickness
     - Seamless or electric-resistance welded steel tubing
     - Steel shall be HSLAS Gr 55 per ASTM A1011 or ASTM A1008
     - Other steels may be used if they meet the following:
       - 55,000 PSI minimum yield strength
       - 70,000 PSI minimum tensile strength
       - 18% minimum elongation in 2"
     - Wall thickness (uncoated) shall be within the range of .083" to .099"
     - Outside diameter (uncoated) shall be within the range of 2.369" to 2.381"
     - Galvanization per ASTM 123 or ASTM A653 G210. For precoated steel tubing (ASTM A653), recoat tube outside diameter weld seam by metallizing with zinc wire per ASTM B833.
5. Sign blanks shall be the sizes and shapes shown on the plans.
6. Additional sign clamp required on the "T-bracket" post for 24" high signs. Place clamp at least 3" above bottom of sign when possible.
7. Sign supports shall not be spliced except where shown. Sign support posts shall not be spliced.
8. See the Traffic Operations Division website for detailed drawings of sign clamps and Wedge Anchor System components. The website address is: http://www.txdot.gov/publications/traffic.htm

WEDGE ANCHOR SYSTEM INSTALLATION PROCEDURE
1. Dig foundation hole. Where solid rock is encountered at ground level, the foundation shall be a minimum depth of 18". When solid rock is encountered below ground level, the foundation shall extend in the solid rock a minimum depth of 18" or provide a minimum foundation depth of 30". If solid rock is encountered, the socket/stub may be reduced in length as required to a minimum length of 18". Any material removed from the socket/stub shall be from the bottom and the clearance requirements given on SMD(GEN) must be followed. The inner surfaces of the socket/stub must remain free of concrete or other debris.
2. The Engineer may permit batches of concrete less than 2 cubic yards to be mixed with a portable, motor driven concrete mixer. For small placements less than 0.5 cubic yards, hand mixing in a suitable container may be allowed by Engineer. Place concrete into hole until it is approximately flush with the ground. Concrete shall be Class A.
3. Insert tubular socket into concrete until top of socket is approximaely 1/4 " above the concrete footing.
4. Plumb the socket. Allow a minimum 4 days for concrete to set, unless otherwise directed by Engineer..
5. Attach the sign to the sign post.
6. Insert the sign post into socket and align sign face with roadway.
7. Drive the wedge into the socket to secure post. This will leave approximately 3 inches of the wedge exposed.

UNIVERSAL ANCHOR SYSTEM INSTALLATION PROCEDURE
1. Dig foundation hole. Where solid rock is encountered at ground level, the foundation shall be a minimum depth of 18". When solid rock is encountered below ground level, the foundation shall extend in the solid rock a minimum depth of 18" or provide a minimum foundation depth of 30". If solid rock is encountered, the socket/stub may be reduced in length as required to a minimum length of 18". Any material removed from the socket/stub shall be from the bottom and the clearance requirements given on SMD(GEN) must be followed. The inner surfaces of the socket/stub must remain free of concrete or other debris.
2. Insert base post in hole to depths shown and backfill hole with concrete.
3. Level and plumb the base post using a torpedo level and allow concrete adequate time to set. The bottom of the slots provided in the stub pipe shall remain above the top of the concrete foundation.
4. Attach the sign to the sign post.
5. Install plastic insert around bottom of post.
6. Insert sign post into base post. Lower until the post comes to rest on steel rod.
7. Seat compression ring using a hammer. Typically, the top of compression ring will be approximately level with top of stub post when optimally installed.
8. Check sign post by hand to ensure it is unable to turn. If loose, increase the tightening of the compression ring.

Texas Department of Transportation

Traffic Operations Division

SIGN MOUNTING DETAILS SMALL ROADSIDE SIGNS WEDGE & UNIVERSAL ANCHOR WITH THIN WALL TUBING POST

SMD(TWT)-08

© TxDOT July 2002
9-08
26E

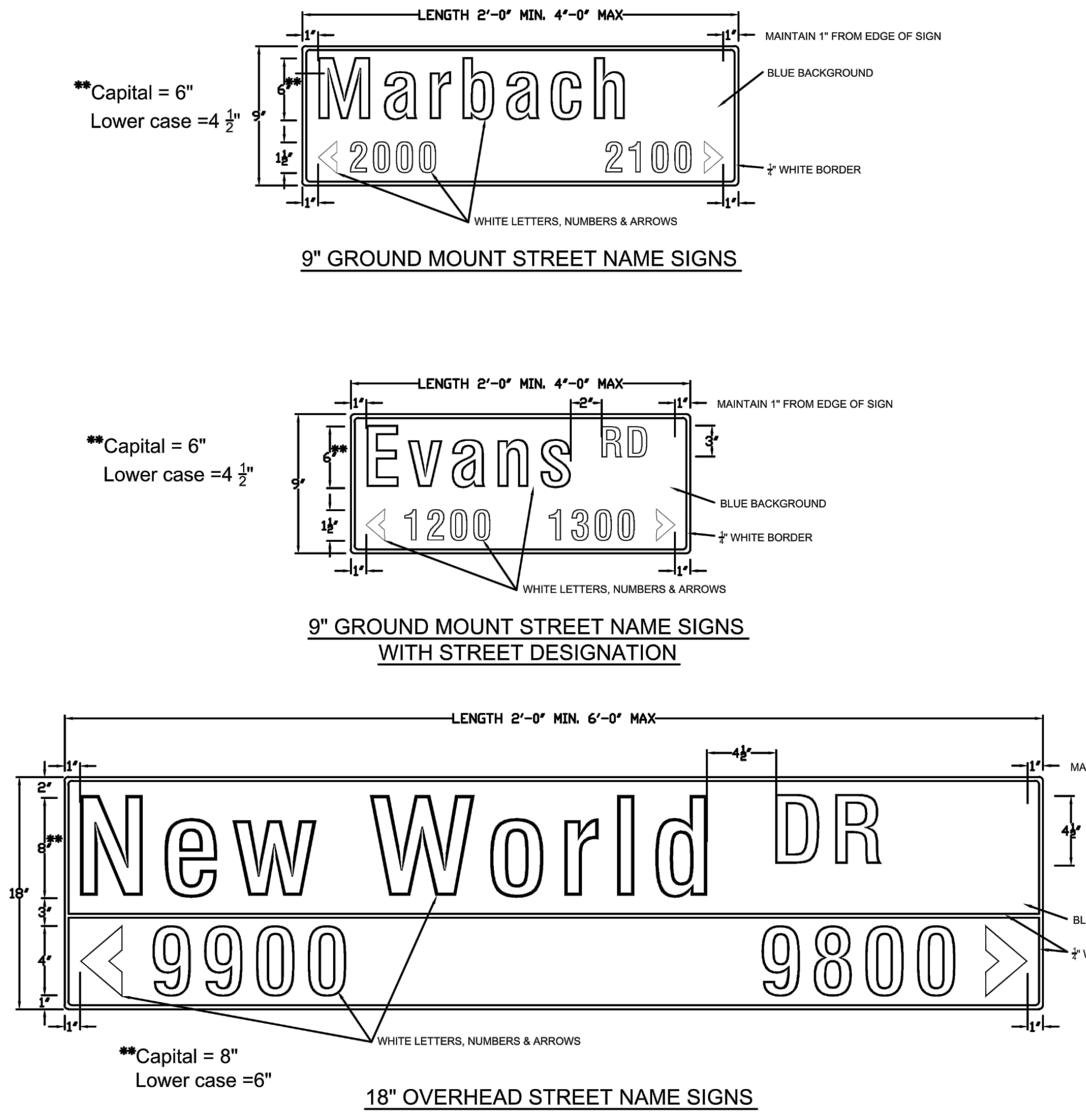
LENGTH 2'-0" MIN. 4'-0" MAX
MAINTAIN 1" FROM EDGE OF SIGN
BLUE BACKGROUND
WHITE BORDER
WHITE LETTERS, NUMBERS & ARROWS
Marbach
2000
2100
Evans RD
1200
1300
LENGTH 2'-0" MIN. 6'-0" MAX
New World DR
9900
9800

**Capital = 6"
Lower case =4 ½"

9" GROUND MOUNT STREET NAME SIGNS

**Capital = 6"
Lower case =4 ½"

9" GROUND MOUNT STREET NAME SIGNS
WITH STREET DESIGNATION

**Capital = 8"
Lower case =6"

18" OVERHEAD STREET NAME SIGNS

	18" OVERHEAD SIGN	9" GROUND MOUNT SIGNS
HEIGHT	18" (381 mm)	9" (228 mm)
LENGTH	48" (1200 mm) MIN. 72" (1800 mm) MAX. 1' (300mm) INCREMENTS OF LENGTH	24" (600 mm) MIN. 48" (1200 mm) MAX. 6" (150mm) INCREMENTS OF LENGTH
THICKNESS	0.125" (3 mm)	
SUBSTRATE	ALUMINUM ALLOY, 5052-H38 (ASTM B-209 GOLD CHROMATE FINISH	
SIGN FACE MATERIALS	BLUE FILM ✳ OVER DIAMOND GRADE - ASTM Type XI Non-Fluorescent	BLUE FILM ✳ OVER HIGH INTENSITY PRISMATIC- ASTM Type IV
LEGENDS AND SYMBOLS	SERIES D, B OR C IF NAME OTHERWISE EXCEEDS MAXIMUM SIGN LENGTH	
COLOR	WHITE LEGEND ON BLUE BACKGROUND	
LETTER TRACKING	17% (USUAL) 10% (MIN.)	10%

✳ ACRYLIC ELECTRONIC CUTTABLE FILM

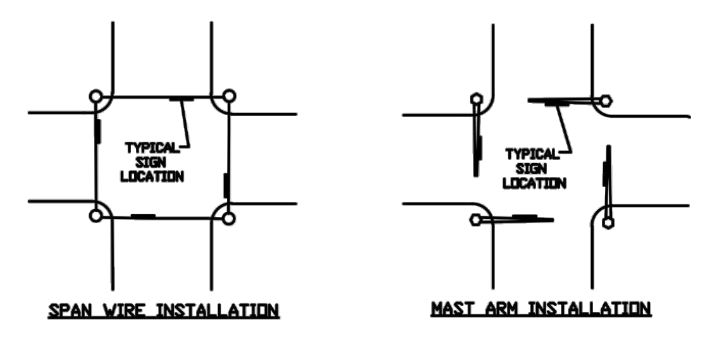
TYPICAL SIGN LOCATION
TYPICAL SIGN LOCATION

SPAN WIRE INSTALLATION

MAST ARM INSTALLATION

SIGN FACE MATERIALS
SHALL CONFORM TO:

1. STANDARD SPECIFICATIONS FOR CONSTRUCTION OF ROADS & BRIDGES ON FEDERAL HIGHWAY PROJECTS - FP-03 U.S. CUSTOMARY UNITS SECTION 718
2. GENERAL SERVICES ADMINISTRATION FEDERAL SPECIFICATIONS L-S-300C
3. ASTM D 4956 - 09e1

Bexar County Public Works

Street Name Sign Details

SHEET 1

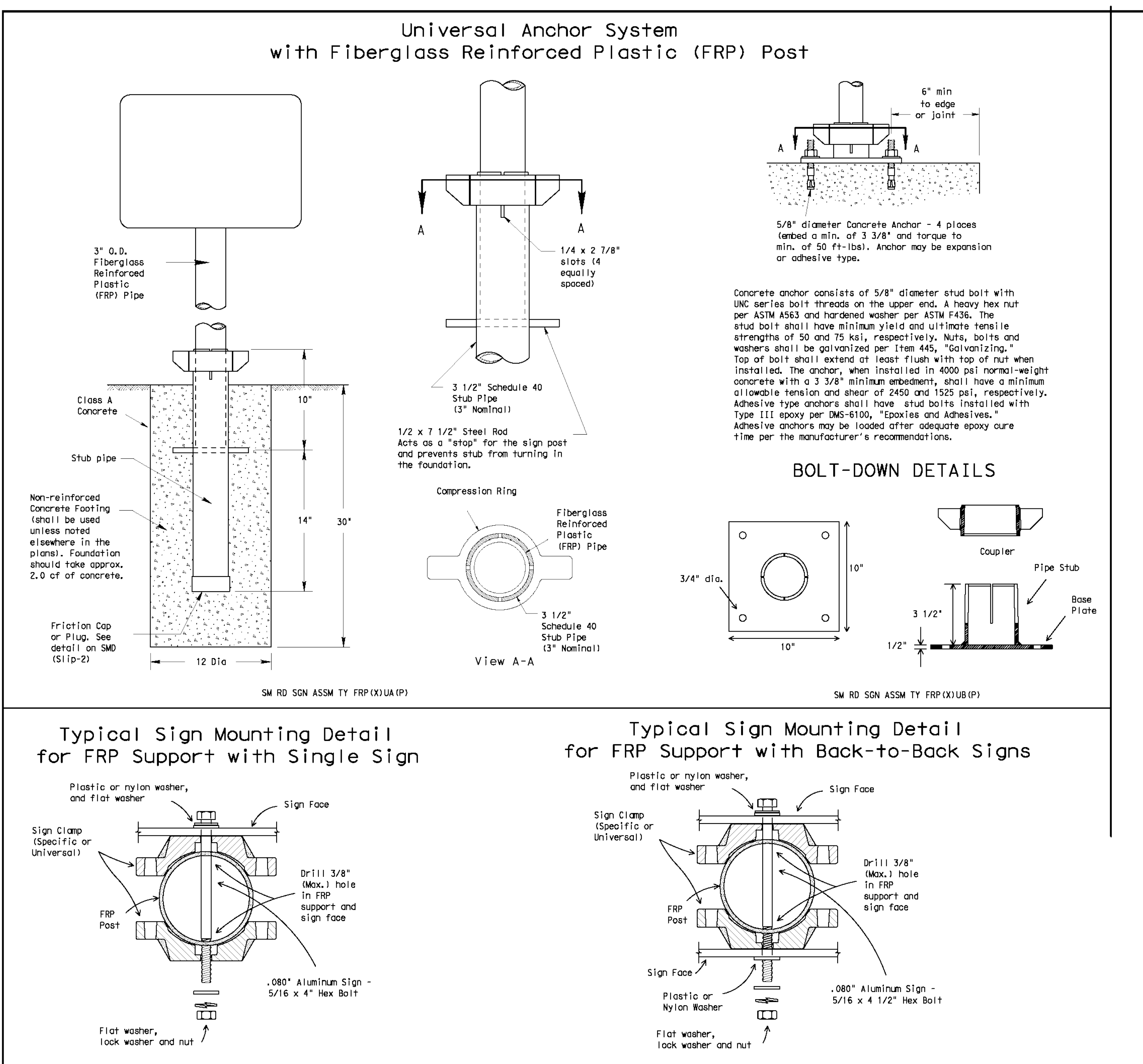
Universal Anchor System
with Fiberglass Reinforced Plastic (FRP) Post
View A-A
BOLT-DOWN DETAILS
Typical Sign Mounting Detail
for FRP Support with Single Sign
Typical Sign Mounting Detail
for FRP Support with Back-to-Back Signs

GENERAL NOTES:

1. FRP sign supports for a single type sign support may be used for signs up to and including 16 square feet. Dual post installation may be used for signs up to and including 32 square feet.
2. All nuts, bolts and washers shall be galvanized per Item 445, "Galvanizing."
3. See the Traffic Operations Division website for detailed drawings of sign clamps. The website address is: http://www.txdot.gov/publications/traffic.htm

FRP POST REQUIREMENTS

1. Materials shall conform to the requirements of Departmental Material Specification DMS-4410 and will be furnished in a yellow or gray color as specified elsewhere in the plans.
2. Thickness of FRP sign support is 0.125" + 0.031", - 0.0".
3. FRP sign supports are prequalified by the Traffic Operations Division. Prequalification procedures are obtained by writing:

Texas Department of Transportation
Traffic Operations Division
125 East 11th Street
Austin, Texas 78701-2483

UNIVERSAL ANCHOR SYSTEM INSTALLATION PROCEDURES

1. Dig foundation hole. Where solid rock is encountered at ground level, the foundation shall be a minimum depth of 18". When solid rock is encountered below ground level, the foundation shall extend in the solid rock a minimum depth of 18" or provide a minimum foundation depth of 30". If solid rock is encountered, the socket/stub may be reduced in length as required to a minimum length of 18". Any material removed from the socket/stub shall be from the bottom and the clearance requirements given on SMD(GEN) must be followed. The inner surfaces of the socket/stub must remain free of concrete or other debris.
2. The Engineer may permit batches of concrete less than 2 cubic yards to be mixed with a portable, motor driven concrete mixer. For small placements less than 0.5 cubic yards, hand mixing in a suitable container may be allowed by Engineer. Concrete shall be Class A.
3. Insert base post in foundation hole to depths shown and fill hole with concrete. Cut base post from bottom and ensure a minimum of 18" embedment if installed in solid rock.
4. Level and plumb the base post with coupler using a torpedo level and let concrete set a minimum of 4 days, unless otherwise directed by Engineer. Bottom of base post slots shall be above the concrete footing.
5. Attach sign to FRP post.
6. Insert sign post into base post. Lower until the post comes to rest on the steel rod.
7. Use hammer to ensure the coupler is firmly seated. Top of coupler should be level with top of base post in most instances.
8. Check sign to ensure there is no twist. If loose, increase the tightening of coupler.

BOLT DOWN SIGN SUPPORT

1. Position base plate with coupler on existing concrete.
2. Drill holes into concrete and insert the 5/8" diameter bolts with wedge anchors, and tighten nuts.
3. Attach sign to FRP post.
4. Insert bottom of sign post into pipe stub.
5. Use hammer to ensure the coupler is firmly seated. Top of coupler should be level with top of base post in most instances.
6. Check sign to ensure there is no twist. If loose, increase the tightening of coupler.

Texas Department of Transportation

Traffic Operations Division

SIGN MOUNTING DETAILS SMALL ROADSIDE SIGNS UNIVERSAL ANCHOR SYSTEM WITH FRP POST

SMD(FRP)-08

© TxDOT July 2002
9-08
26F

NO.	REVISION	DATE

CALEB M. CHANCE
98401
Caleb M. Chance
8/2/24

PAPE-DAWSON ENGINEERS
2000 NW LOOP 410 I SAN ANTONIO, TX 78213 I 210.375.9000
TEXAS ENGINEERING FIRM #470 I TEXAS SURVEYING FIRM #10028800

STONEHILL UNITS 2B & 6A
SAN ANTONIO, TEXAS

SIGNAGE DETAILS SHEET 2 OF 2

PLAT NO. 24-11800312
JOB NO. 12456–13
DATE JULY 2024
DESIGNER RA
CHECKED BL DRAWN EG
SHEET C3.11

Date: Aug 13, 2024, 7:57am User ID: ralvarez
File: P:\124\56\13\Design\Civil\SGDT-1245613.dwg

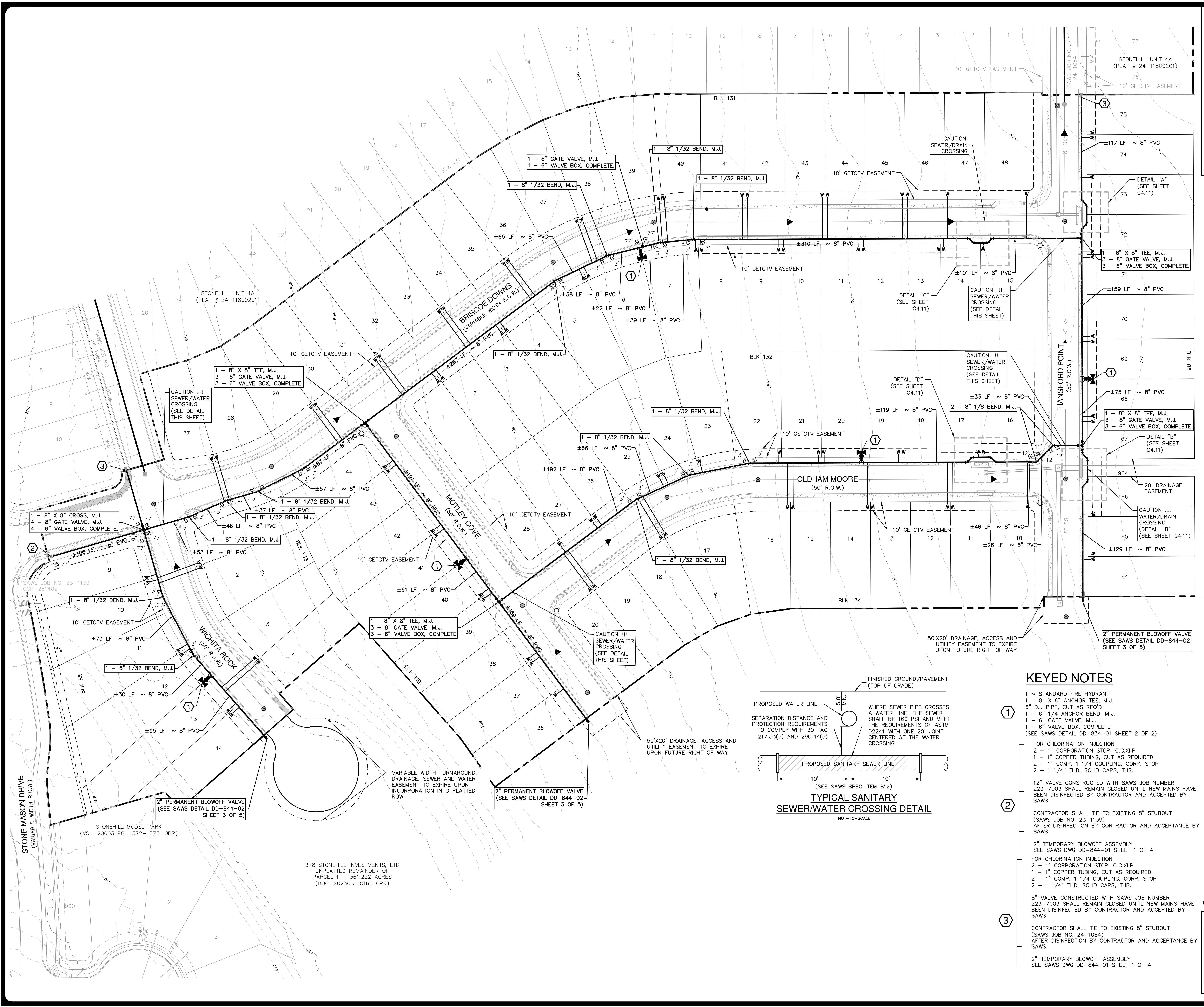
BRISCOE DOWNS (VARIABLE WIDTH R.O.W.)
MOTLEY COVE (50' R.O.W.)
WICHITA ROCK (50' R.O.W.)
OLDHAM MOORE (50' R.O.W.)
HANSFORD POINT (50' R.O.W.)
STONE MASON DRIVE (VARIABLE WIDTH R.O.W.)
STONEHILL UNIT 4A (PLAT # 24-11800201)
STONEHILL MODEL PARK (VOL. 20003 PG. 1572-1573, OBR)
378 STONEHILL INVESTMENTS, LTD UNPLATTED REMAINDER OF PARCEL 1 - 361.222 ACRES (DOC. 202301560160 OPR)
SAWS JOB NO. 24-1084
SAWS JOB NO. 23-1139 GCP-281402
BLK 131
BLK 132
BLK 133
BLK 134
BLK 85
10' GETCTV EASEMENT
1 - 8" X 8" CROSS, M.J. 4 - 8" GATE VALVE, M.J. 4 - 6" VALVE BOX, COMPLETE.
1 - 8" X 8" TEE, M.J. 3 - 8" GATE VALVE, M.J. 3 - 6" VALVE BOX, COMPLETE.
1 - 8" GATE VALVE, M.J. 1 - 6" VALVE BOX, COMPLETE.
1 - 8" 1/32 BEND, M.J.
2 - 8" 1/8 BEND, M.J.
±106 LF ~ 8" PVC
±53 LF ~ 8" PVC
±46 LF ~ 8" PVC
±37 LF ~ 8" PVC
±57 LF ~ 8" PVC
±87 LF ~ 8" PVC
±267 LF ~ 8" PVC
±65 LF ~ 8" PVC
±38 LF ~ 8" PVC
±22 LF ~ 8" PVC
±39 LF ~ 8" PVC
±310 LF ~ 8" PVC
±101 LF ~ 8" PVC
±117 LF ~ 8" PVC
±159 LF ~ 8" PVC
±75 LF ~ 8" PVC
±129 LF ~ 8" PVC
±33 LF ~ 8" PVC
±119 LF ~ 8" PVC
±66 LF ~ 8" PVC
±192 LF ~ 8" PVC
±46 LF ~ 8" PVC
±26 LF ~ 8" PVC
±191 LF ~ 8" PVC
±61 LF ~ 8" PVC
±169 LF ~ 8" PVC
±73 LF ~ 8" PVC
±30 LF ~ 8" PVC
±95 LF ~ 8" PVC
CAUTION !!! SEWER/WATER CROSSING (SEE DETAIL THIS SHEET)
CAUTION! SEWER/DRAIN CROSSING
CAUTION !!! WATER/DRAIN CROSSING (DETAIL "B" (SEE SHEET C4.11)
DETAIL "A" (SEE SHEET C4.11)
DETAIL "B" (SEE SHEET C4.11)
DETAIL "C" (SEE SHEET C4.11)
DETAIL "D" (SEE SHEET C4.11)
20' DRAINAGE EASEMENT
50'X20' DRAINAGE, ACCESS AND UTILITY EASEMENT TO EXPIRE UPON FUTURE RIGHT OF WAY
VARIABLE WIDTH TURNAROUND, DRAINAGE, SEWER AND WATER EASEMENT TO EXPIRE UPON INCORPORATION INTO PLATTED ROW
2" PERMANENT BLOWOFF VALVE (SEE SAWS DETAIL DD-844-02 SHEET 3 OF 5)
8" SS
77'
3'
12'
①
②
③

TYPICAL SANITARY SEWER/WATER CROSSING DETAIL

NOT-TO-SCALE

FINISHED GROUND/PAVEMENT (TOP OF GRADE)

PROPOSED WATER LINE

5.0' MIN.

SEPARATION DISTANCE AND PROTECTION REQUIREMENTS TO COMPLY WITH 30 TAC 217.53(d) AND 290.44(e)

WHERE SEWER PIPE CROSSES A WATER LINE, THE SEWER SHALL BE 160 PSI AND MEET THE REQUIREMENTS OF ASTM D2241 WITH ONE 20' JOINT CENTERED AT THE WATER CROSSING

PROPOSED SANITARY SEWER LINE

10' 10'

(SEE SAWS SPEC ITEM 812)

KEYED NOTES

①
1 ~ STANDARD FIRE HYDRANT
1 - 8" X 6" ANCHOR TEE, M.J.
6" D.I. PIPE, CUT AS REQ'D
1 - 6" 1/4 ANCHOR BEND, M.J.
1 - 6" GATE VALVE, M.J.
1 - 6" VALVE BOX, COMPLETE
(SEE SAWS DETAIL DD-834-01 SHEET 2 OF 2)

②
FOR CHLORINATION INJECTION
2 - 1" CORPORATION STOP, C.C.XI.P
1 - 1" COPPER TUBING, CUT AS REQUIRED
2 - 1" COMP. 1 1/4 COUPLING, CORP. STOP
2 - 1 1/4" THD. SOLID CAPS, THR.

12" VALVE CONSTRUCTED WITH SAWS JOB NUMBER 223-7003 SHALL REMAIN CLOSED UNTIL NEW MAINS HAVE BEEN DISINFECTED BY CONTRACTOR AND ACCEPTED BY SAWS

CONTRACTOR SHALL TIE TO EXISTING 8" STUBOUT (SAWS JOB NO. 23-1139) AFTER DISINFECTION BY CONTRACTOR AND ACCEPTANCE BY SAWS

2" TEMPORARY BLOWOFF ASSEMBLY
SEE SAWS DWG DD-844-01 SHEET 1 OF 4

③
FOR CHLORINATION INJECTION
2 - 1" CORPORATION STOP, C.C.XI.P
1 - 1" COPPER TUBING, CUT AS REQUIRED
2 - 1" COMP. 1 1/4 COUPLING, CORP. STOP
2 - 1 1/4" THD. SOLID CAPS, THR.

8" VALVE CONSTRUCTED WITH SAWS JOB NUMBER 223-7003 SHALL REMAIN CLOSED UNTIL NEW MAINS HAVE BEEN DISINFECTED BY CONTRACTOR AND ACCEPTED BY SAWS

CONTRACTOR SHALL TIE TO EXISTING 8" STUBOUT (SAWS JOB NO. 24-1084) AFTER DISINFECTION BY CONTRACTOR AND ACCEPTANCE BY SAWS

2" TEMPORARY BLOWOFF ASSEMBLY
SEE SAWS DWG DD-844-01 SHEET 1 OF 4

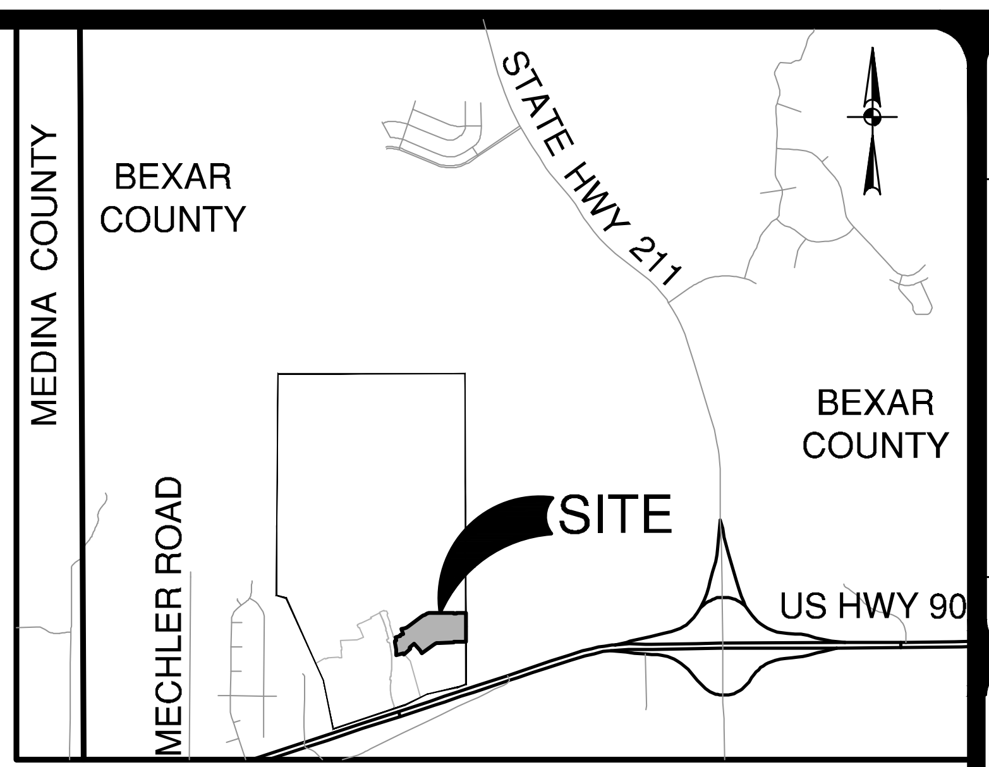
MEDINA COUNTY
BEXAR COUNTY
BEXAR COUNTY
STATE HWY 211
MECHLER ROAD
SITE
US HWY 90

LOCATION MAP

NOT-TO-SCALE

SCALE: 1"= 50'

0' 50' 100' 150'

WATER LEGEND

PROJECT LIMITS	▬ ▬ ─ ─ ▬ ▬
EXISTING WATER	FIRE HYDRANT — W —
EXISTING SEWER	— SS —
PROPOSED SEWER	MANHOLE — SS —
PROPOSED WATER	FIRE HYDRANT ━━
PROPOSED 3/4" SINGLE SERVICE WITH 5/8" METER	─── W
PROPOSED 1" DUAL SERVICE WITH 5/8" METER	⊣ W W
SINGLE IRRIGATION SERVICE (REF. PLAN VIEW FOR SIZE)	─── IRR
JOINT RESTRAINT	⊠

FIRE FLOW NOTE:

IN AN EFFORT TO MEET THE CITY OF SAN ANTONIO'S FIRE FLOW REQUIREMENTS FOR THE PROPOSED RESIDENTIAL DEVELOPMENT, THE PUBLIC WATER MAIN SYSTEM HAS BEEN DESIGNED FOR A MINIMUM FIRE FLOW DEMAND OF 1500 GPM AT 25 PSI RESIDUAL PRESSURE. THE FIRE FLOW REQUIREMENTS FOR INDIVIDUAL STRUCTURES WILL BE REVIEWED DURING THE BUILDING PERMIT PROCESS IN ACCORDANCE WITH THE PROCEDURES SET FORTH BY THE CITY OF SAN ANTONIO DIRECTOR OF DEVELOPMENT SERVICES DEPARTMENT AND THE SAN ANTONIO FIRE DEPARTMENT FIRE MARSHAL.

ROW PERMIT NOTE:

A BEXAR COUNTY PERMIT MUST BE OBTAINED BEFORE WORKING IN BEXAR COUNTY RIGHTS-OF-WAY.

PRESSURE REDUCING VALVE NOTE:

PRESSURE REDUCING VALVE TO BE INSTALLED ON CUSTOMER'S SIDE OF METER BY HOMEBUILDER.

PRESSURE NOTE:

CONTRACTOR TO VERIFY THAT NO PORTION OF THE TRACT IS BELOW GROUND ELEVATION OF 745 FEET WHERE THE STATIC PRESSURE WILL NORMALLY EXCEED 80 PSI. AT ALL SUCH LOCATIONS WHERE THE GROUND LEVEL IS BELOW 745 FEET, THE DEVELOPER OR BUILDER SHALL INSTALL AT EACH LOT, ON THE CUSTOMER'S SIDE OF THE METER, AN APPROVED TYPE PRESSURE REGULATOR IN CONFORMANCE WITH THE PLUMBING CODE OF THE CITY OF SAN ANTONIO. NO DUAL SERVICES ALLOWED FOR ANY LOT(S) IF *PRV IS/ARE REQUIRED FOR SUCH LOT(S), ONLY SINGLE SERVICE CONNECTIONS SHALL BE ALLOWED.

*NOTE: A PRESSURE REGULATOR IS ALSO KNOWN AS A PRESSURE REDUCING VALVE (PRV).

JOINT RESTRAINT NOTE:

CONTRACTOR SHALL INSTALL RETAINER GLANDS AT ALL FITTINGS AND PROVIDE JOINT RESTRAINING HARNESSES OR FIELD LOCK GASKETS AT ALL JOINTS WITHIN THE LENGTH SHOWN. CONTRACTOR SHALL INSURE THAT ALL TEES, BENDS, VALVES, ETC. HAVE A MINIMUM OF 5 FT OF PIPE WITH NO JOINTS ON EACH SIDE OF THE FITTING. JOINT RESTRAINTS AND RETAINER GLANDS SHALL BE CALCULATED BY SAWS APPROVED PROGRAMS. THERE WILL BE NO SEPARATE PAY ITEM FOR RETAINER GLANDS AND OTHER JOINT RESTRAINING HARNESSES AND GASKETS, BUT SHALL BE SUBSIDIARY TO THE UNIT COST PER LINEAL FOOT OF PIPE INSTALLED.

TRENCH EXCAVATION SAFETY PROTECTION:

CONTRACTOR AND/ OR CONTRACTOR'S INDEPENDENTLY RETAINED EMPLOYEE OR STRUCTURAL DESIGN/ GEOTECHNICAL/ SAFETY/EQUIPMENT CONSULTANT, IF ANY, SHALL REVIEW THESE PLANS AND ANY AVAILABLE GEOTECHNICAL INFORMATION AND THE ANTICIPATED INSTALLATION SITES WITHIN THE PROJECT WORK AREA IN ORDER TO IMPLEMENT CONTRACTOR'S TRENCH EXCAVATION SAFETY PROTECTION SYSTEMS, PROGRAMS AND /OR PROCEDURES FOR THE PROJECT DESCRIBED IN THE CONTRACT DOCUMENTS. THE CONTRACTOR'S IMPLEMENTATION OF THESE SYSTEMS, PROGRAMS AND/OR PROCEDURES SHALL PROVIDE FOR ADEQUATE TRENCH EXCAVATION SAFETY PROTECTION THAT COMPLY WITH AS A MINIMUM, OSHA STANDARDS FOR TRENCH EXCAVATIONS. SPECIFICALLY, CONTRACTOR AND/OR CONTRACTOR'S INDEPENDENTLY RETAINED EMPLOYEE OR SAFETY CONSULTANT SHALL IMPLEMENT A TRENCH SAFETY PROGRAM IN ACCORDANCE WITH OSHA STANDARDS GOVERNING THE PRESENCE AND ACTIVITIES OF INDIVIDUALS WORKING IN AND AROUND TRENCH EXCAVATION.

WATER (SAWS PRESSURE ZONE 930)

DEVELOPER'S NAME: STONEHILL UNITS 2B & 6A
ADDRESS: 5419 N LOOP 1604 E
CITY: SAN ANTONIO STATE: TEXAS ZIP: 78218
PHONE# (210) 496-2668 FAX#
SAWS BLOCK MAP# 66558 TOTAL EDU'S 92 TOTAL ACREAGE 18.171
TOTAL LINEAR FOOTAGE OF PIPE: 8" - 3,316 LF PLAT NO. 24-11800312
NUMBER OF LOTS 92 SAWS JOB NO. 24-1121

NO.	REVISION	DATE

CALEB M. CHANCE
98401
Caleb M. Chance
12/20/24

PAPE-DAWSON ENGINEERS
2000 NW LOOP 410 I SAN ANTONIO, TX 78213 I 210.375.9000
TEXAS ENGINEERING FIRM #470 I TEXAS SURVEYING FIRM #10028800

STONEHILL UNITS 2B & 6A
SAN ANTONIO, TEXAS

OVERALL WATER DISTRIBUTION PLAN

PLAT NO. 24-11800312
JOB NO. 12456-13
DATE JULY 2024
DESIGNER RA
CHECKED DRAWN EG
SHEET C4.00

Date: Dec 20, 2024, 9:59am User ID: ralvarez
File: P:\124\56\13\Design\Civil\WTOA-1245613.dwg

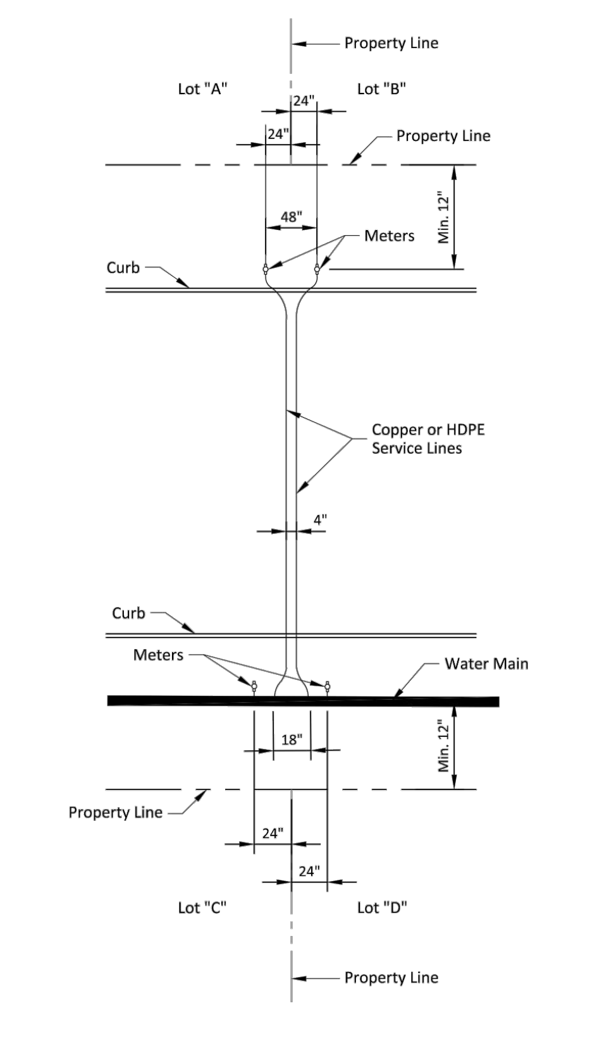
Property Line
Lot "A"
Lot "B"
24"
Property Line
48"
Meters
Min. 12"
Curb
Copper or HDPE Service Lines
4'
Curb
Meters
Water Main
18"
Min. 12"
Property Line
24"
Lot "C"
Lot "D"
Property Line

SINGLE SERVICE LINE - SINGLE METER

PROPERTY OF
SAN ANTONIO WATER SYSTEM
SAN ANTONIO, TEXAS

TYPICAL
NEW DEVELOPMENT
SERVICE ARRANGEMENT

APPROVED	REVISED
March 2008	December 2018

DD-824-05 SHEET 1 OF 3

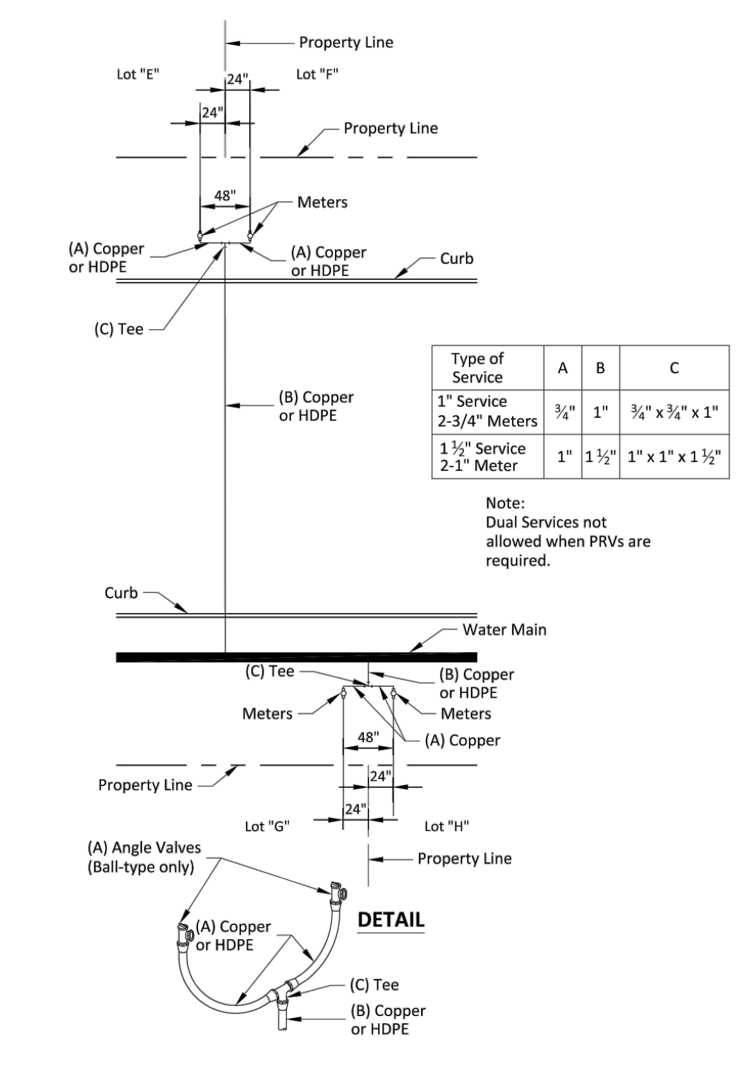
Property Line
Lot "E"
Lot "F"
24"
Property Line
48"
Meters
(A) Copper or HDPE
(A) Copper or HDPE
Curb
(C) Tee
(B) Copper or HDPE
Curb
Water Main
(C) Tee
(B) Copper or HDPE
Meters
(A) Copper
Property Line
Lot "G"
Lot "H"
Property Line
(A) Angle Valves (Ball-type only)
(A) Copper or HDPE
DETAIL
(C) Tee
(B) Copper or HDPE

Type of Service	A	B	C
1" Service 2-3/4" Meters	¾"	1"	¾" x ¾" x 1"
1½" Service 2-1" Meter	1"	1½"	1" x 1" x 1½"

Note:
Dual Services not allowed when PRVs are required.

SINGLE SERVICE LINE - DUAL METER

PROPERTY OF
SAN ANTONIO WATER SYSTEM
SAN ANTONIO, TEXAS

TYPICAL
SERVICE ARRANGEMENT

APPROVED	REVISED
March 2008	December 2018

DD-824-05 SHEET 2 OF 3

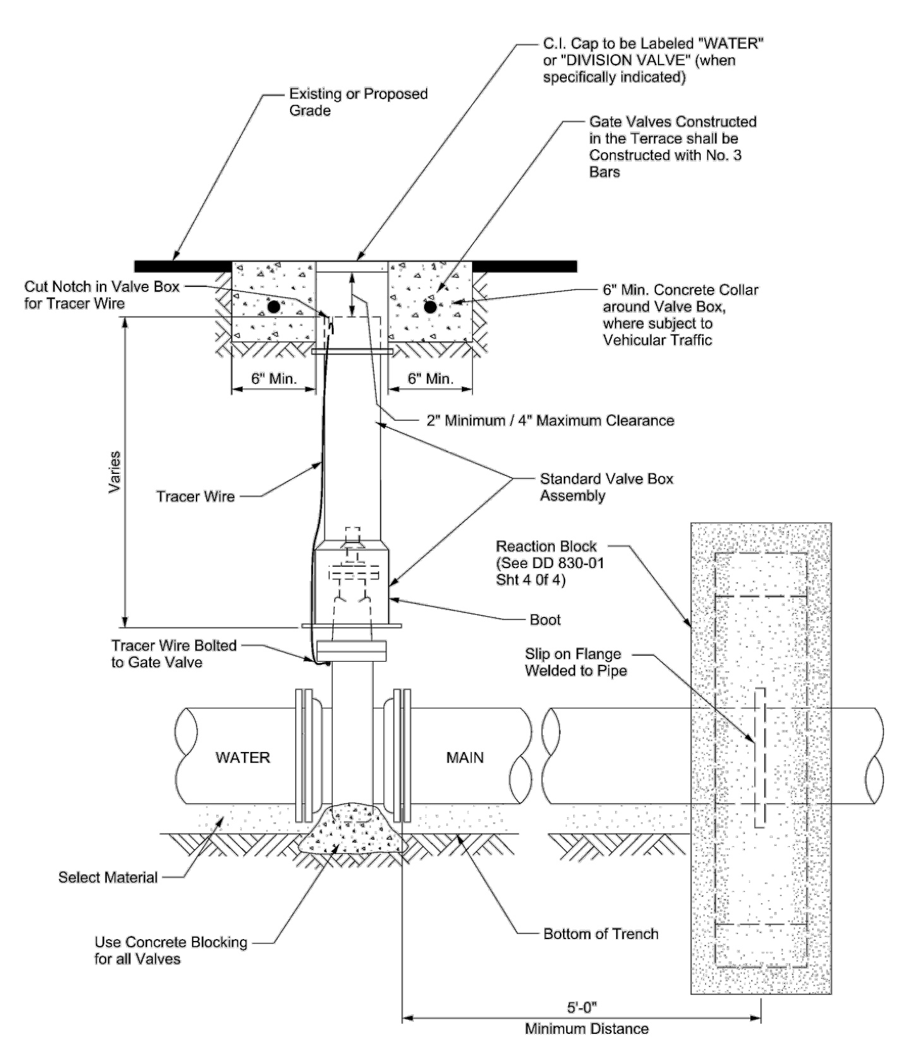
Existing or Proposed Grade
C.I. Cap to be Labeled "WATER" or "DIVISION VALVE" (when specifically indicated)
Gate Valves Constructed in the Terrace shall be Constructed with No. 3 Bars
Cut Notch in Valve Box for Tracer Wire
6" Min.
6" Min.
6" Min. Concrete Collar around Valve Box, where subject to Vehicular Traffic
2" Minimum / 4" Maximum Clearance
Varies
Tracer Wire
Standard Valve Box Assembly
Reaction Block (See DD 830-01 Sht 4 of 4)
Boot
Tracer Wire Bolted to Gate Valve
Slip on Flange Welded to Pipe
WATER
MAIN
Select Material
Use Concrete Blocking for all Valves
Bottom of Trench
5'-0"
Minimum Distance

NOTE: Tracer Wire for PVC (Typ. for PVC & HDPE)
NOTE: All Concrete to be 3,000 psi

Note: For all work associated with Recycled Water Valves, refer to DD 110-10, Sht. 1 of 1

PROPERTY OF
SAN ANTONIO WATER SYSTEM
SAN ANTONIO, TEXAS

INSTALLATION OF NON-GEARED
GATE VALVE WITH VALVE BOX
AND EXTENSION

APPROVED	REVISED
MARCH 2008	AUG 2019

DD 828-01 SHEET 1 OF 1

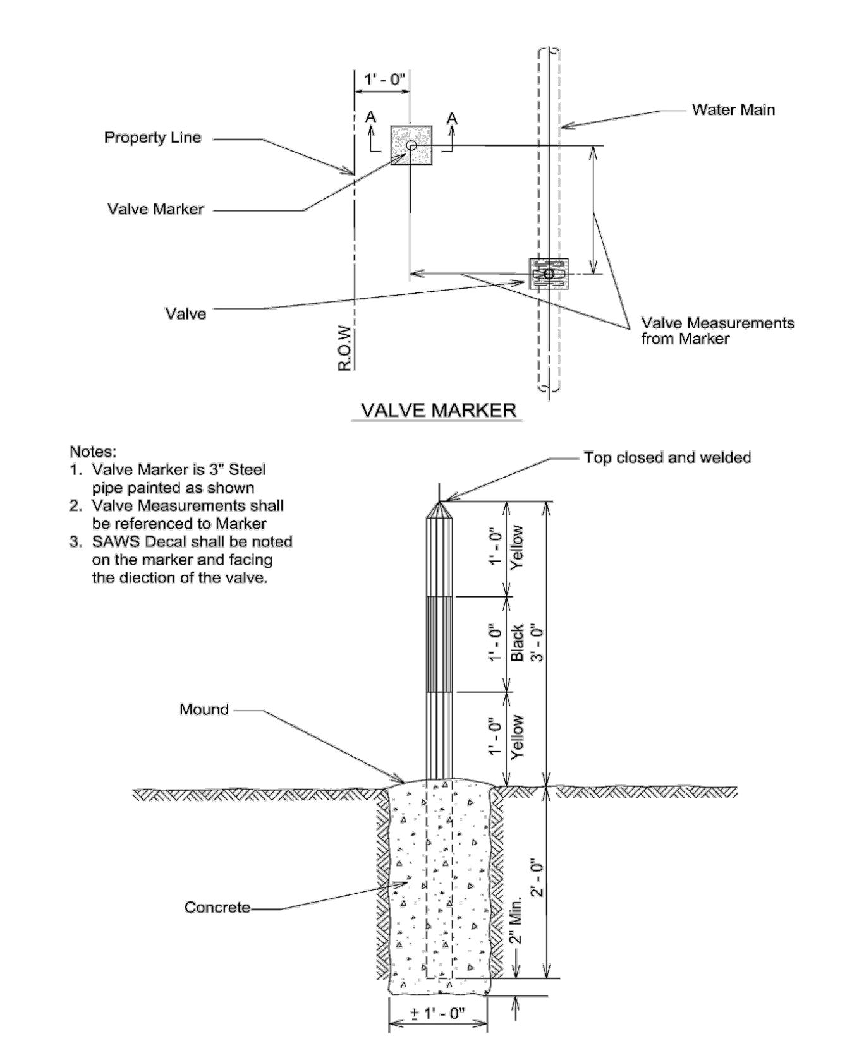
1'-0"
Property Line
Water Main
Valve Marker
A
A
Valve
R.O.W.
Valve Measurements from Marker
VALVE MARKER
Top closed and welded
Yellow
Black
Yellow
Mound
Concrete
2" Min.
2'-0"
± 1'-0"
SECTION A-A

Notes:
1. Valve Marker is 3" Steel pipe painted as shown
2. Valve Measurements shall be referenced to Marker
3. SAWS Decal shall be noted on the marker and facing the diection of the valve.

PROPERTY OF
SAN ANTONIO WATER SYSTEM
SAN ANTONIO, TEXAS

VALVE MARKER

APPROVED	REVISED
MARCH 2008	AUG 2019

DD-828-04 SHEET 1 OF 1

NOTE:
Use:
(A) Anchoring Tee with M.J. Fitting or M.J. Valve
(B) Std. M.J. Tee with Anchoring Coupling or Anchoring Fitting
NOTE:
Polywrap Below Ground

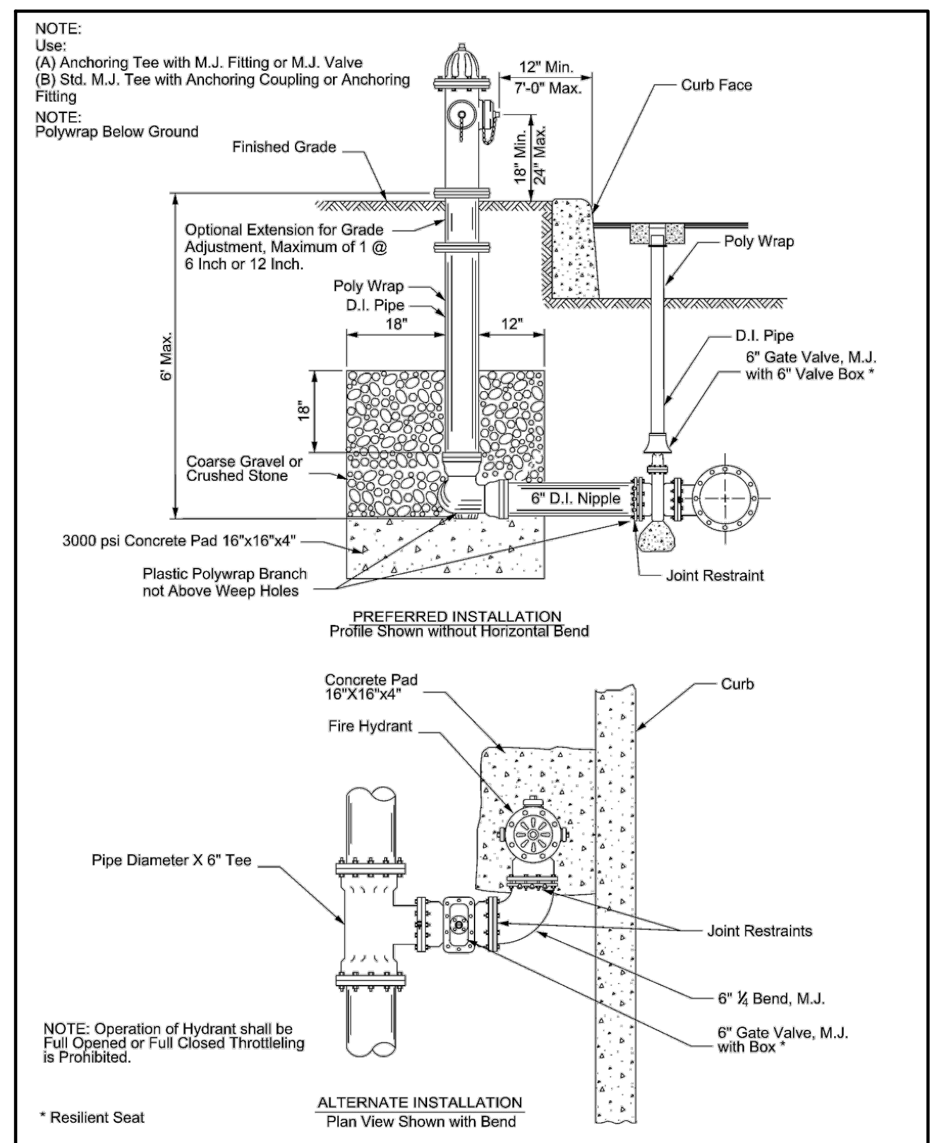
12" Min. 7'-0" Max.
Curb Face
Finished Grade
18" Min. 24" Max.
Optional Extension for Grade Adjustment, Maximum of 1 @ 6 Inch or 12 Inch.
Poly Wrap
Poly Wrap
D.I. Pipe
18"
12"
D.I. Pipe
6' Max.
6" Gate Valve, M.J. with 6" Valve Box *
Coarse Gravel or Crushed Stone
6" D.I. Nipple
3000 psi Concrete Pad 16"x18"x4"
Plastic Polywrap Branch not Above Weep Holes
Joint Restraint
PREFERRED INSTALLATION
Profile Shown without Horizontal Bend
Concrete Pad 16"X18"x4"
Fire Hydrant
Curb
Pipe Diameter X 6" Tee
Joint Restraints
6" ¼ Bend, M.J.
6" Gate Valve, M.J. with Box *
ALTERNATE INSTALLATION
Plan View Shown with Bend

NOTE: Operation of Hydrant shall be Full Opened or Full Closed Throttleling is Prohibited.

* Resilient Seat

PROPERTY OF
SAN ANTONIO WATER SYSTEM
SAN ANTONIO, TEXAS

FIRE HYDRANT
INSTALLATION
(JOINT RESTRAINT)

APPROVED	REVISED
MAY 2013	AUG 2019

DD-834-01 SHEET 1 OF 3

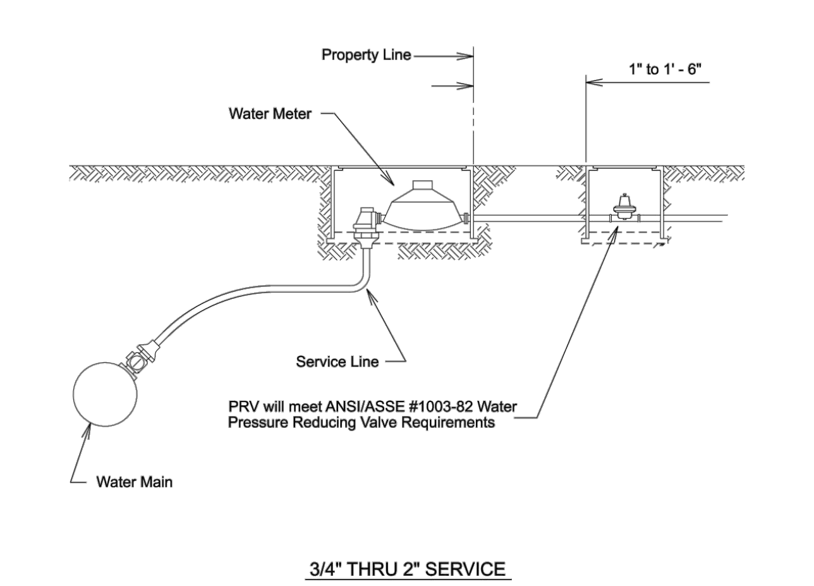
Property Line
1" to 1 - 6"
Water Meter
Service Line
PRV will meet ANSI/ASSE #1003-82 Water Pressure Reducing Valve Requirements
Water Main

3/4" THRU 2" SERVICE
PRESSURE REDUCING VALVE

Note:
For Tapping Schedule, See DD-824-01 Sheet 3 of 3.

PROPERTY OF
SAN ANTONIO WATER SYSTEM
SAN ANTONIO, TEXAS

SERVICE INSTALLATION
WITH PRESSURE
REDUCING VALVE

APPROVED	REVISED
MARCH 2008	APRIL 2014

DD-833-03 SHEET 1 OF 1

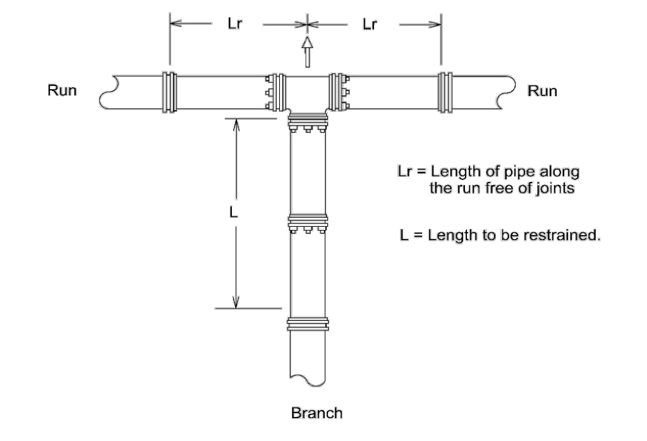
Lr
Lr
Run
Run
L
Lr = Length of pipe along the run free of joints
L = Length to be restrained.
Branch

RESTRAINED LENGTH FOR TEES

PIPE SIZE (inch)	BRANCH SIZE (inch)	LENGTH OF RUN (ft.)	RESTRAINED LENGTH IN FEET, WHEN TEST PRESSURE = 200 psi	RESTRAINED LENGTH IN FEET, WHEN TEST PRESSURE = 150 psi
6	4	0	42	31
6	4	5	7	1
6	4	10	1	1
6	6	0	59	44
6	6	5	35	20
6	6	10	11	1
8	4	0	42	31
8	4	5	1	1
8	6	0	59	44
8	6	5	28	13
8	6	10	1	1
8	8	0	77	58
8	8	5	53	34
8	8	10	30	11
8	8	15	6	1

RESTRAINED LENGTH DESIGN
Restrained length calculations are for P.V.C pipe bedded in compacted granular material extending to the top of the pipe.The native soil material is assumed to be inorganic clay of high plasticity. Depth of bury is assumed to be 4 feet.

Note:
These calculations are provided for reference. The restrained length shall be designed based upon the conditions encountered during the installation.

PROPERTY OF
SAN ANTONIO WATER SYSTEM
SAN ANTONIO, TEXAS

RESTRAINED LENGTHS
FOR TEES

APPROVED	REVISED
March 2008	AUG 2019

DD-839-04 SHEET 1 OF 2

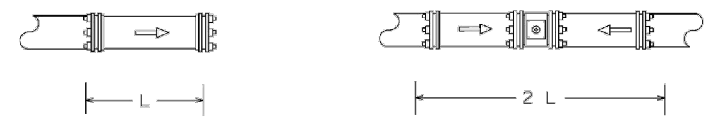

L=LENGTH TO BE RESTRAINED

PIPE SIZE (inch)	RESTRAINED LENGTH IN FEET, WHEN TEST PRESSURE = 200 psi	RESTRAINED LENGTH IN FEET, WHEN TEST PRESSURE = 150 psi
6	59	44
8	77	58
10	93	69
12	109	82

RESTRAINED LENGTH DESIGN

Restrained length calculations are for P.V.C. pipe bedded in compacted granular material extending to the top of the pipe. The native soil material is assumed to be inorganic clay of high plasticity. Depth of bury is assumed to be 4 feet.

Note:
These calculations are provide for reference. The restrained length shall be designed based upon the conditions encountered during the installation.

PROPERTY OF
SAN ANTONIO WATER SYSTEM
SAN ANTONIO, TEXAS

RESTRAINED LENGTHS FOR
DEAD ENDS / INLINE VALVES

APPROVED	REVISED
MARCH 2008	AUG 2019

DD-839-05 SHEET 1 OF 1

L = Length to be restrained on both sides of fitting. When restrained lengths overlap on the diagonal pipe, all pipe between fittings should be restrained.

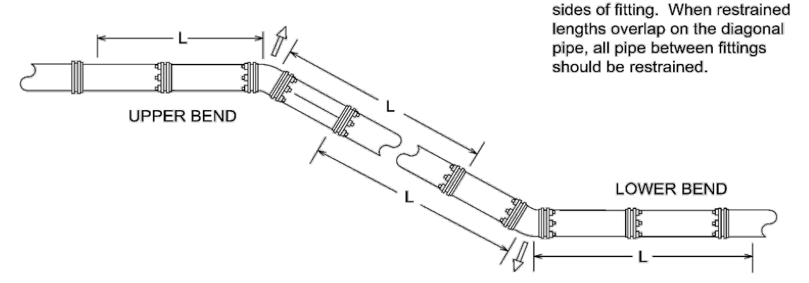
L
UPPER BEND
L
L
LOWER BEND
L

PIPE SIZE (inch)	BEND ANGLE (deg.)	LOW SIDE DEPTH	UPPER BEND RESTRAINED LENGTH IIN FEET TEST PRESSURE = 200 psi	LOWER BEND RESTRAINED LENGTH IN FEET TEST PRESSURE = 200psi	UPPER BEND RESTRAINED LENGTH IN FEET TEST PRESSURE = 150 psi	LOWER BEND RESTRAINED LENGTH IN FEET TEST PRESSURE = 150 psi
6	45	5	24	8	18	6
6	22.5	5	12	4	9	3
6	11.25	5	6	2	4	1
6	45	10	24	5	18	4
6	22.5	10	12	2	9	2
6	11.25	10	6	1	4	1
8	45	5	32	11	24	8
8	22.5	5	15	5	11	4
8	11.25	5	8	3	6	2
8	45	10	32	7	24	5
8	22.5	10	15	3	11	2
8	11.25	10	8	2	6	1
12	45	5	45	16	34	12
12	22.5	5	22	7	16	6
12	11.25	5	11	4	8	3
12	45	10	45	10	34	7
12	22.5	10	22	5	16	3
12	11.25	10	11	2	8	2

RESTRAINED LENGTH DESIGN
Restrained length calculations are for P.V.C. pipe bedded in compacted granular material extending to the top of the pipe. The native soil material is assumed to be inorganic clay of high plasticity. Depth of bury is assumed to be 4 feet.

Note:
These calculations are provided for reference. The restrained length shall be designed based upon the conditions encountered during the installation.

PROPERTY OF
SAN ANTONIO WATER SYSTEM
SAN ANTONIO, TEXAS

RESTRAINED LENGTHS
VERTICAL OFFSETS

APPROVED	REVISED
MARCH 2008	AUG 2019

DD-839-06 SHEET 1 OF 1

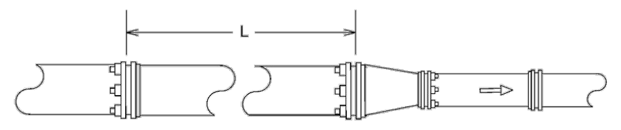

L=Length to be restrained

PIPE SIZE (inch)	SMALL SIZE (inch)	RESTRAINED LENGTH IN FEET, WHEN TEST PRESSURE = 200 psi	RESTRAINED LENGTH IN FEET, WHEN TEST PRESSURE = 150 psi
6	4	30	23
8	4	55	42
8	6	32	24
12	4	95	71
12	6	80	60
12	8	58	43

RESTRAINED LENGTH DESIGN
Restrained length calculations are for P.V.C. pipe bedded in compacted granular material extending to the top of the pipe. The native soil material is assumed to be inorganic clay of high plasticity. Depth of bury is assumed to be 4 feet.

Note:
These calculations are provided for reference. Th restrained length shall be designed based upon the conditions encountered during the installation.

PROPERTY OF
SAN ANTONIO WATER SYSTEM
SAN ANTONIO, TEXAS

RESTRAINED LENGTHS
FOR REDUCERS

APPROVED	REVISED
MARCH 2008	AUG 2019

DD-839-07 SHEET 1 OF 1

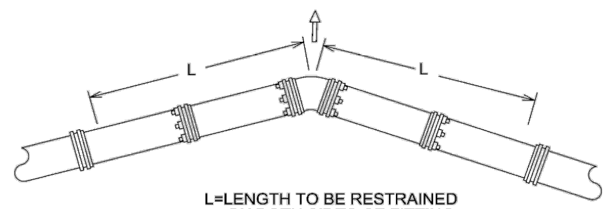

L=LENGTH TO BE RESTRAINED
ON BOTH SIDES OF FITTING

PIPE SIZE (inch)	BEND ANGLE (deg)	RESTRAINED LENGTH IN FEET, WHEN TEST PRESSURE = 200 psi	RESTRAINED LENGTH IN FEET, WHEN TEST PRESSURE = 150 psi
6	90	23	17
6	45	9	7
6	22.5	5	3
6	11.25	2	2
8	90	30	22
8	45	12	9
8	22.5	6	4
8	11.25	3	2
12	90	43	32
12	45	18	13
12	22.5	8	6
12	11.25	4	3

RESTRAINED LENGTH DESIGN
Restrained length calculations are for P.V.C pipe bedded in compacted granular material extending to the top of the pipe. The native soil material is assumed to be inorganic clay of high plasticity. Depth of bury is assumed to be 4 feet.

Note:
These calculations are provided for reference. The restrained length shall be designed based upon the conditions encountered during the installation.

PROPERTY OF
SAN ANTONIO WATER SYSTEM
SAN ANTONIO, TEXAS

RESTRAINED LENGTHS
FOR HORIZONTAL BENDS

APPROVED	REVISED
MARCH 2008	AUG 2019

DD-839-08 SHEET 1 OF 1

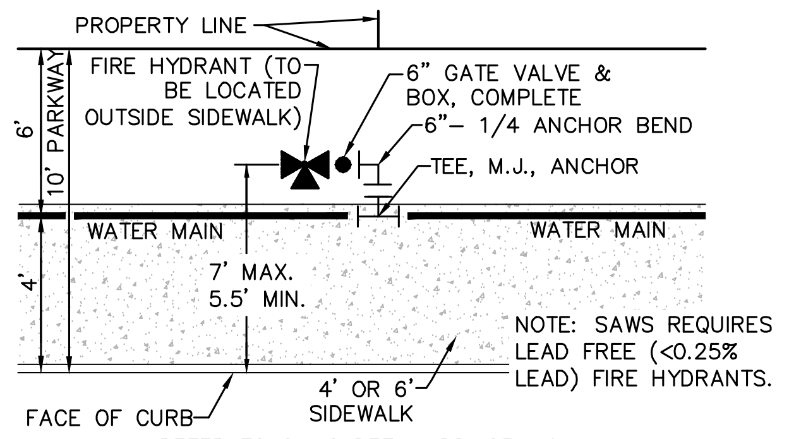
PROPERTY LINE
FIRE HYDRANT (TO BE LOCATED OUTSIDE SIDEWALK)
6" GATE VALVE & BOX, COMPLETE
6"- 1/4 ANCHOR BEND
TEE, M.J., ANCHOR
6'
10' PARKWAY
4'
WATER MAIN
WATER MAIN
7' MAX.
5.5' MIN.
4' OR 6' SIDEWALK
FACE OF CURB

NOTE: SAWS REQUIRES LEAD FREE (<0.25% LEAD) FIRE HYDRANTS.

REFER TO SAWS DETAIL DD-834-01

FIRE HYDRANT INSTALLATION

NOT-TO-SCALE

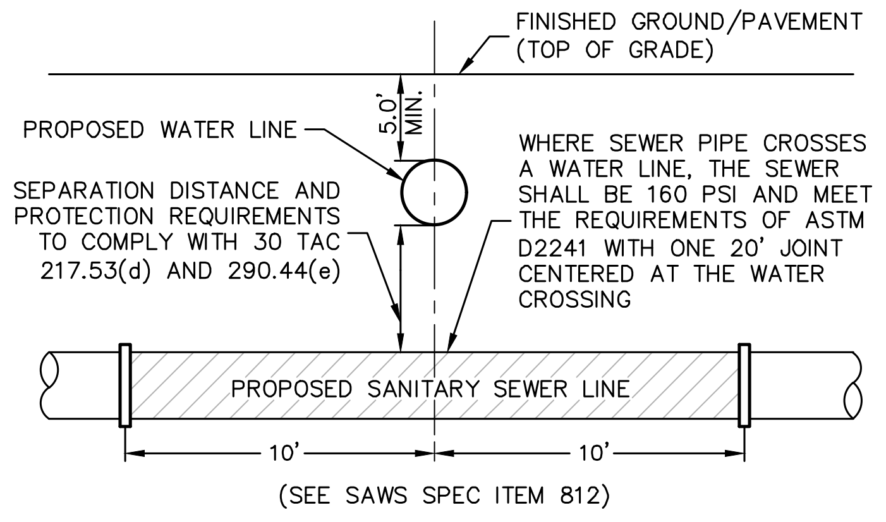
FINISHED GROUND/PAVEMENT (TOP OF GRADE)
PROPOSED WATER LINE
5.0' MIN.
PROPOSED SANITARY SEWER LINE
10'
10'

SEPARATION DISTANCE AND PROTECTION REQUIREMENTS TO COMPLY WITH 30 TAC 217.53(d) AND 290.44(e)

WHERE SEWER PIPE CROSSES A WATER LINE, THE SEWER SHALL BE 160 PSI AND MEET THE REQUIREMENTS OF ASTM D2241 WITH ONE 20' JOINT CENTERED AT THE WATER CROSSING

(SEE SAWS SPEC ITEM 812)

TYPICAL SANITARY SEWER/WATER CROSSING DETAIL

NOT-TO-SCALE

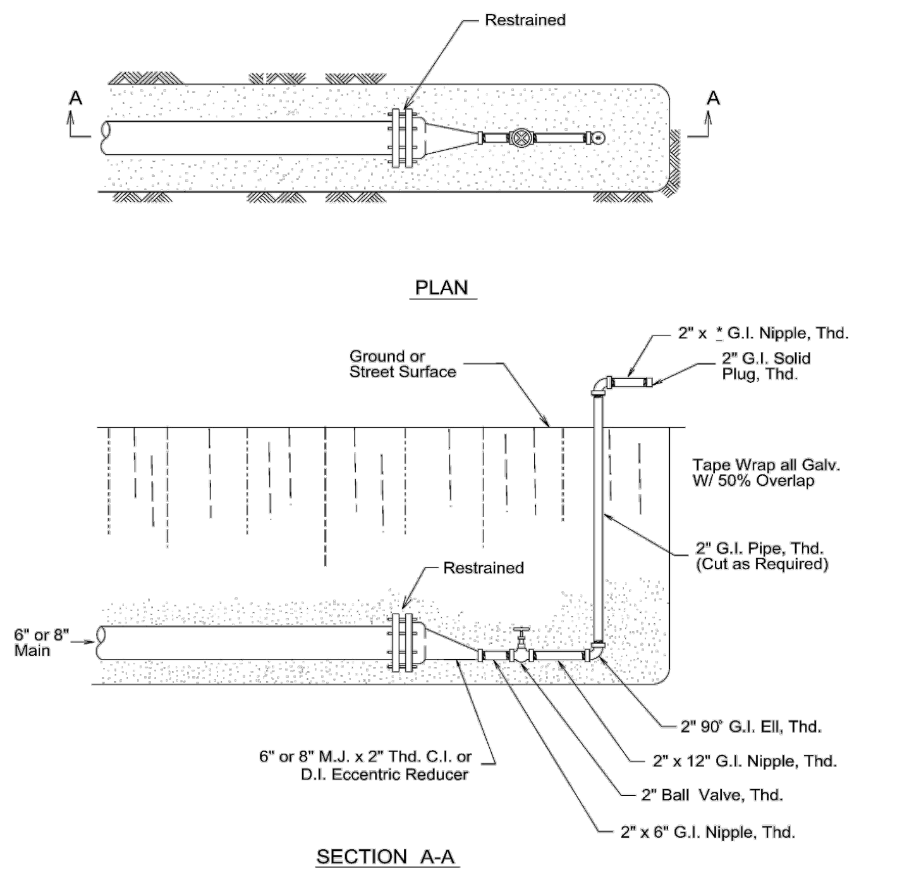
Restrained
A
A
PLAN
2" x * G.I. Nipple, Thd.
2" G.I. Solid Plug, Thd.
Ground or Street Surface
Tape Wrap all Galv. W/ 50% Overlap
2" G.I. Pipe, Thd. (Cut as Required)
Restrained
6" or 8" Main
2" 90° G.I. Ell, Thd.
6" or 8" M.J. x 2" Thd. C.I. or D.I. Eccentric Reducer
2" x 12" G.I. Nipple, Thd.
2" Ball Valve, Thd.
2" x 6" G.I. Nipple, Thd.

SECTION A-A

* Cut as required to extend beyond excavation

PROPERTY OF
SAN ANTONIO WATER SYSTEM
SAN ANTONIO, TEXAS

2" TEMPORARY
BLOW-OFF ASSEMBLY
ON 6" & 8" MAINS

APPROVED	REVISED
MARCH 2008	AUG 2019

DD-844-01 SHEET 1 OF 4

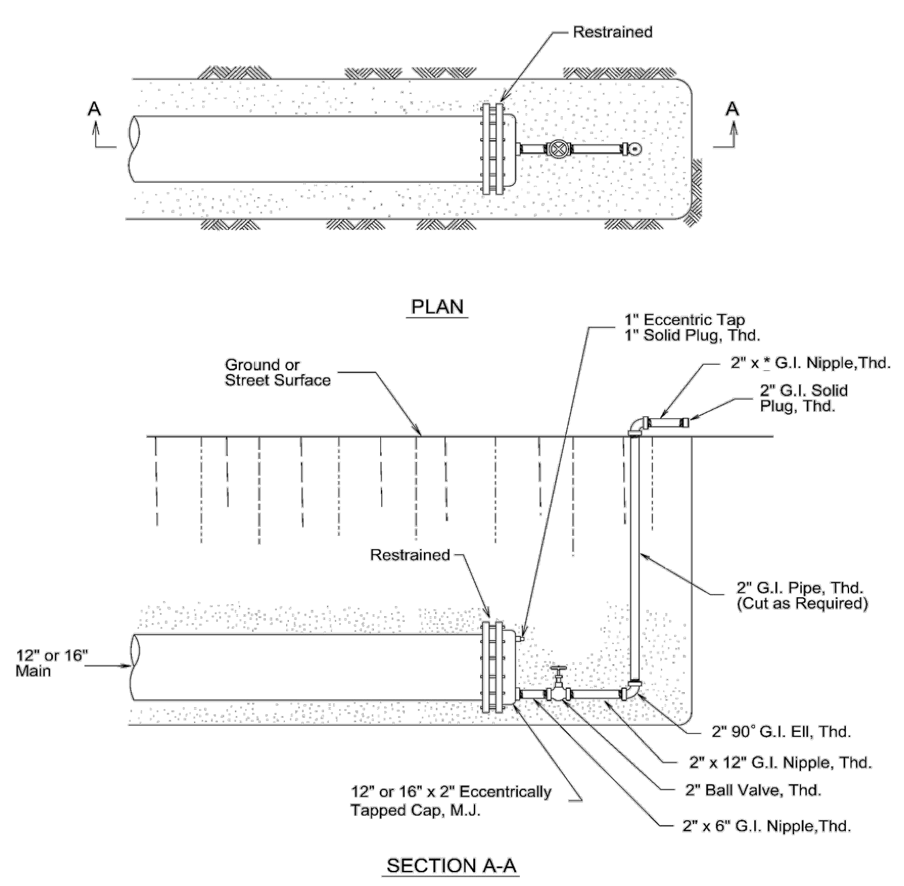
Restrained
A
A
PLAN
1" Eccentric Tap
1" Solid Plug, Thd.
2" x * G.I. Nipple,Thd.
2" G.I. Solid Plug, Thd.
Ground or Street Surface
Restrained
12" or 16" Main
2" G.I. Pipe, Thd. (Cut as Required)
2" 90° G.I. Ell, Thd.
2" x 12" G.I. Nipple, Thd.
2" Ball Valve, Thd.
12" or 16" x 2" Eccentrically Tapped Cap, M.J.
2" x 6" G.I. Nipple,Thd.

SECTION A-A

* Cut as required to extend beyond excavation.

PROPERTY OF
SAN ANTONIO WATER SYSTEM
SAN ANTONIO, TEXAS

2" TEMPORARY
BLOW-OFF ASSEMBLY
ON 12" & 16" MAINS

APPROVED	REVISED
March 2008	AUG 2019

DD-844-01 SHEET 2 OF 4

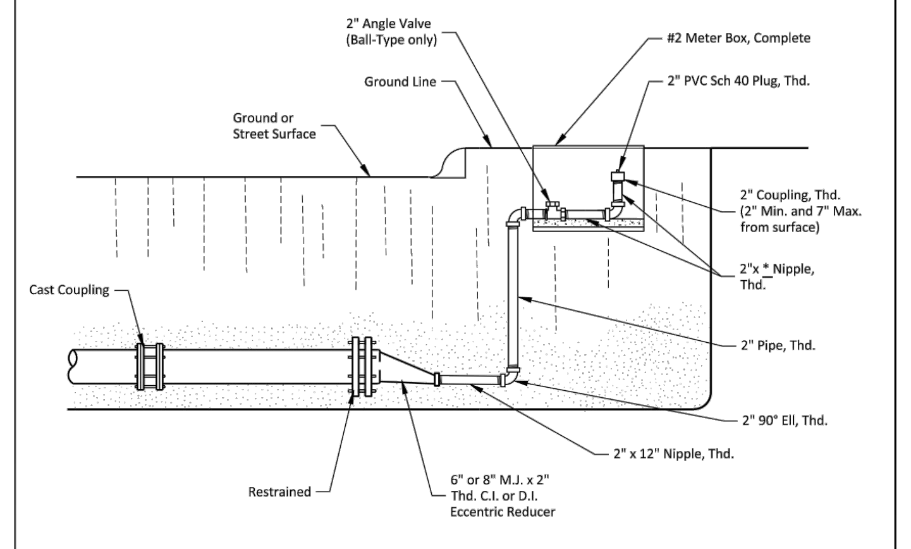
2" Angle Valve (Ball-Type only)
#2 Meter Box, Complete
Ground Line
2" PVC Sch 40 Plug, Thd.
Ground or Street Surface
2" Coupling, Thd. (2" Min. and 7" Max. from surface)
2" x * Nipple, Thd.
Cast Coupling
2" Pipe, Thd.
2" 90° Ell, Thd.
2" x 12" Nipple, Thd.
Restrained
6" or 8" M.J. x 2" Thd. C.I. or D.I. Eccentric Reducer

* Cut to fit in meter box

PROPERTY OF
SAN ANTONIO WATER SYSTEM
SAN ANTONIO, TEXAS

2" PERMANENT
BLOW-OFF ASSEMBLY ON
6" & 8" MAINS

APPROVED	REVISED
MARCH 2008	AUG 2019

DD-844-02 SHEET 3 OF 5

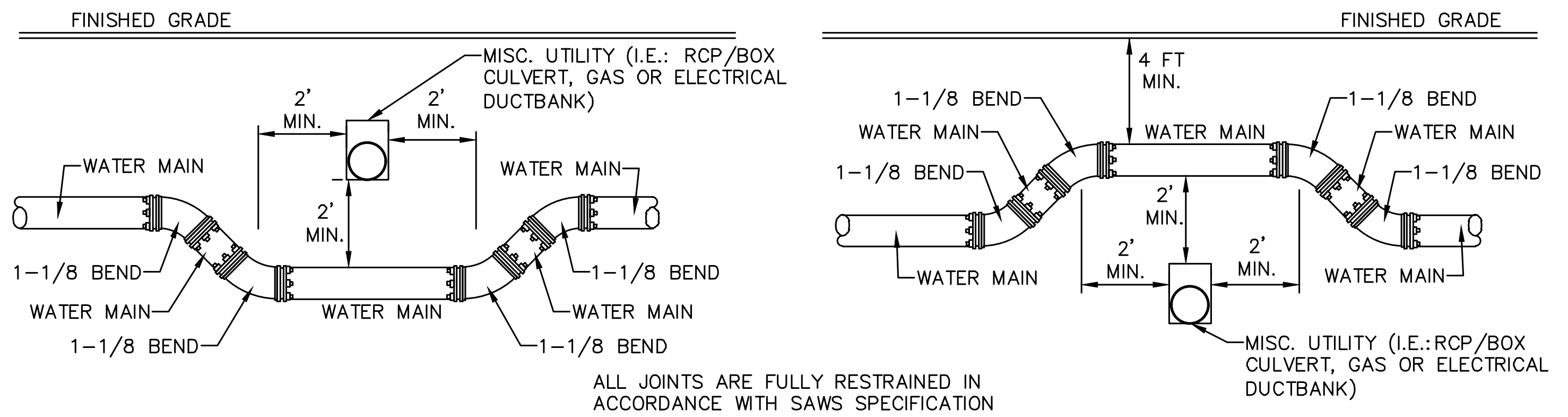
FINISHED GRADE
MISC. UTILITY (I.E.: RCP/BOX CULVERT, GAS OR ELECTRICAL DUCTBANK)
2' MIN.
2' MIN.
WATER MAIN
WATER MAIN
2' MIN.
1-1/8 BEND
1-1/8 BEND
WATER MAIN
WATER MAIN
WATER MAIN
1-1/8 BEND
1-1/8 BEND
FINISHED GRADE
4 FT MIN.
1-1/8 BEND
1-1/8 BEND
WATER MAIN
WATER MAIN
WATER MAIN
1-1/8 BEND
1-1/8 BEND
2' MIN.
2' MIN.
2' MIN.
WATER MAIN
WATER MAIN
MISC. UTILITY (I.E.:RCP/BOX CULVERT, GAS OR ELECTRICAL DUCTBANK)

ALL JOINTS ARE FULLY RESTRAINED IN ACCORDANCE WITH SAWS SPECIFICATION TABLE DD-839-06.

TYPICAL UTILITY/WATER CROSSING DETAIL

NOT-TO-SCALE

WATER (SAWS PRESSURE ZONE 930)

DEVELOPER'S NAME: STONEHILL UNITS 2B & 6A
ADDRESS: 5419 N LOOP 1604 E
CITY: SAN ANTONIO STATE: TEXAS ZIP: 78218
PHONE# (210) 496-2668 FAX#
SAWS BLOCK MAP# 66558 TOTAL EDU'S 92 TOTAL ACREAGE 18.171
TOTAL LINEAR FOOTAGE OF PIPE: 8" - 3,316 LF PLAT NO. 24-11800312
NUMBER OF LOTS 92 SAWS JOB NO. 24-1121

NO.	REVISION	DATE

STATE OF TEXAS
CALEB M. CHANCE
98401
LICENSED PROFESSIONAL ENGINEER
12/20/24

PAPE-DAWSON ENGINEERS
2000 NW LOOP 410 | SAN ANTONIO, TX 78213 | 210.375.9000
TEXAS ENGINEERING FIRM #470 | TEXAS SURVEYING FIRM #10028800

STONEHILL UNITS 2B & 6A
SAN ANTONIO, TEXAS

WATER DISTRIBUTION PLAN DETAILS

PLAT NO. 24-11800312
JOB NO. 12456-13
DATE JULY 2024
DESIGNER RA
CHECKED BL DRAWN EG
SHEET C4.10

Date: Dec 20, 2024, 9:59am User ID: ralvarez
File: P:\124\56\13\Design\Civil\WTDT-1245613.dwg

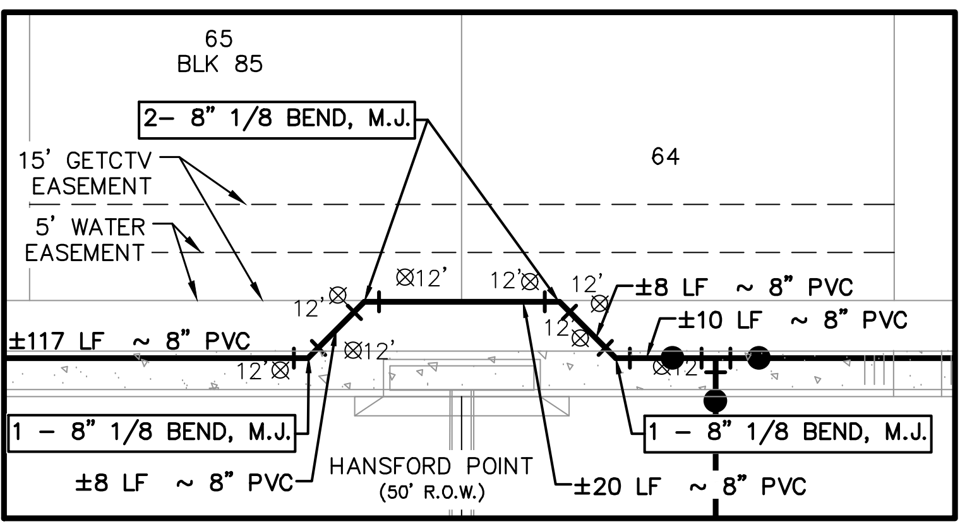

DETAIL "A"
SCALE: 1" = 20'

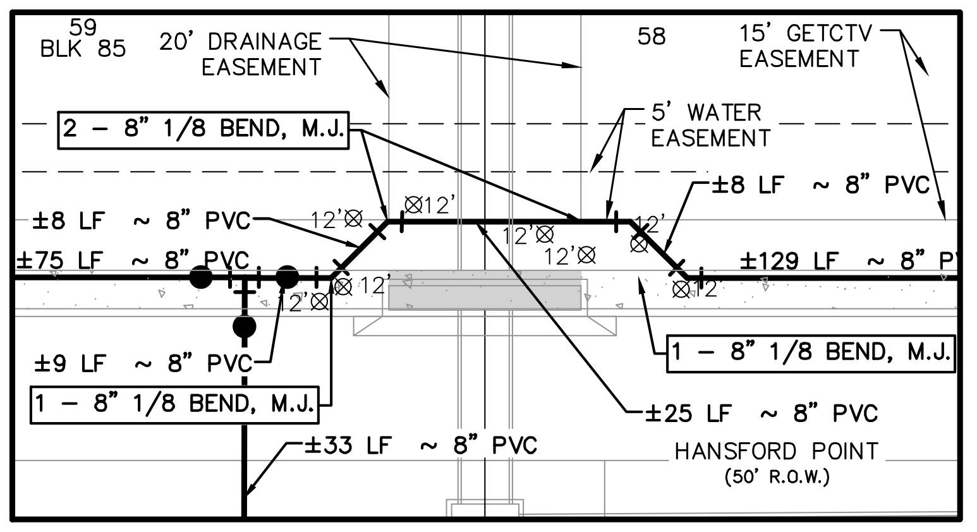

DETAIL "B"
SCALE: 1" = 20'

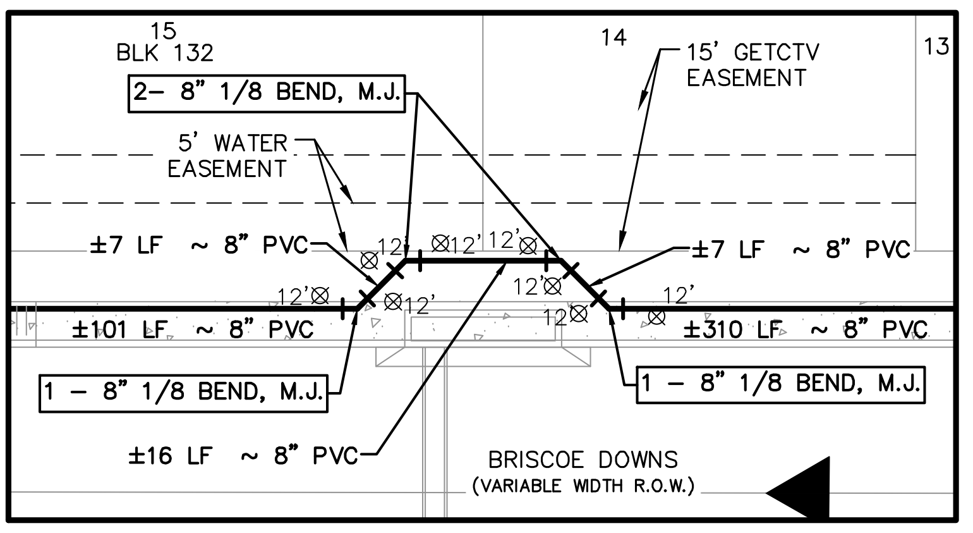

DETAIL "C"
SCALE: 1" = 20'

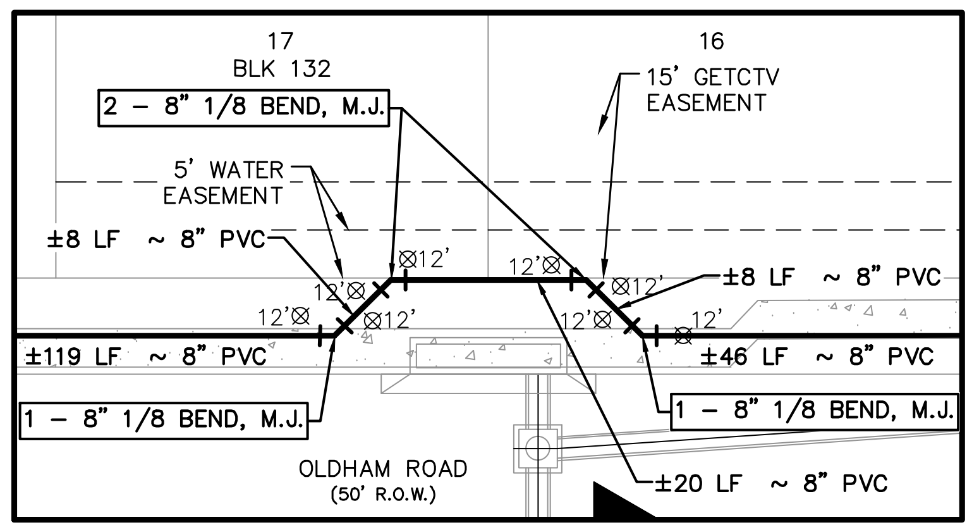

DETAIL "D"
SCALE: 1" = 20'

SAWS CONSTRUCTION NOTES

(LAST REVISED JANUARY 2022)

SAWS GENERAL SECTION

1. ALL MATERIALS AND CONSTRUCTION PROCEDURES WITHIN THE SCOPE OF THIS CONTRACT SHALL BE APPROVED BY THE SAN ANTONIO WATER SYSTEM (SAWS) AND COMPLY WITH THE PLANS, SPECIFICATIONS, GENERAL CONDITIONS AND WITH THE FOLLOWING AS APPLICABLE:
   - A. CURRENT TEXAS COMMISSION ON ENVIRONMENTAL QUALITY (TCEQ) "DESIGN CRITERIA FOR DOMESTIC WASTEWATER SYSTEM", TEXAS ADMINISTRATIVE CODE (TAC) TITLE 30 PART 1 CHAPTER 217 AND "PUBLIC DRINKING WATER", TAC TITLE 30 PART 1 CHAPTER 290.
   - B. CURRENT TXDOT "STANDARD SPECIFICATIONS FOR CONSTRUCTION OF HIGHWAYS, STREETS AND DRAINAGE".
   - C. CURRENT "SAN ANTONIO WATER SYSTEM STANDARD SPECIFICATIONS FOR WATER AND SANITARY SEWER CONSTRUCTION".
   - D. CURRENT CITY OF SAN ANTONIO "STANDARD SPECIFICATIONS FOR PUBLIC WORKS CONSTRUCTION".
   - E. CURRENT CITY OF SAN ANTONIO "UTILITY EXCAVATION CRITERIA MANUAL" (UECM).
2. THE CONTRACTOR SHALL NOT PROCEED WITH ANY PIPE INSTALLATION WORK UNTIL THEY OBTAIN A COPY OF THE APPROVED COUNTER PERMIT OR GENERAL CONSTRUCTION PERMIT (GCP) FROM THE CONSULTANT AND HAS BEEN NOTIFIED BY SAWS CONSTRUCTION INSPECTION DIVISION TO PROCEED WITH THE WORK AND HAS ARRANGED A MEETING WITH THE INSPECTOR AND CONSULTANT FOR THE WORK REQUIREMENTS. WORK COMPLETED BY THE CONTRACTOR WITHOUT AN APPROVED COUNTER PERMIT AND/OR A GCP WILL BE SUBJECT TO REMOVAL AND REPLACEMENT AT THE EXPENSE OF THE CONTRACTORS AND/OR THE DEVELOPER.
3. THE CONTRACTOR SHALL OBTAIN THE SAWS STANDARD DETAILS FROM THE SAWS WEBSITE, HTTP://WWW.SAWS.ORG/BUSINESS_CENTER/SPECS. UNLESS OTHERWISE NOTED WITHIN THE DESIGN PLANS.
4. THE CONTRACTOR IS TO MAKE ARRANGEMENTS WITH THE SAWS CONSTRUCTION INSPECTION DIVISION AT (210) 233–2973, ON NOTIFICATION PROCEDURES THAT WILL BE USED TO NOTIFY AFFECTED HOME RESIDENTS AND/OR PROPERTY OWNERS 48 HOURS PRIOR TO BEGINNING ANY WORK.
5. LOCATION AND DEPTH OF EXISTING UTILITIES AND SERVICE LATERALS SHOWN ON THE PLANS ARE UNDERSTOOD TO BE APPROXIMATE. ACTUAL LOCATIONS AND DEPTHS MUST BE FIELD VERIFIED BY THE CONTRACTOR AT LEAST 1 WEEK PRIOR TO CONSTRUCTION. IT SHALL BE THE CONTRACTOR'S RESPONSIBILITY TO LOCATE UTILITY SERVICE LINES AS REQUIRED FOR CONSTRUCTION AND TO PROTECT THEM DURING CONSTRUCTION AT NO COST TO SAWS.
6. THE CONTRACTOR SHALL VERIFY THE EXACT LOCATION OF UNDERGROUND UTILITIES AND DRAINAGE STRUCTURES AT LEAST 1–2 WEEKS PRIOR TO CONSTRUCTION WHETHER SHOWN ON PLANS OR NOT. PLEASE ALLOW UP TO 7 BUSINESS DAYS FOR LOCATES REQUESTING PIPE LOCATION MARKERS ON SAWS FACILITIES. THE FOLLOWING CONTACT INFORMATION ARE SUPPLIED FOR VERIFICATION PURPOSES:
   - SAWS UTILITY LOCATES: HTTP://WWW.SAWS.ORG/SERVICE/LOCATES
   - COSA DRAINAGE (210) 207–0724 OR (210) 207–6026
   - COSA TRAFFIC SIGNAL OPERATIONS (210) 206–8480
   - COSA TRAFFIC SIGNAL DAMAGES (210) 207–3951
   - TEXAS STATE WIDE ONE CALL LOCATOR 1–800–545–6005 OR 811
7. THE CONTRACTOR SHALL BE RESPONSIBLE FOR RESTORING EXISTING FENCES, CURBS, STREETS, DRIVEWAYS, SIDEWALKS, LANDSCAPING AND STRUCTURES TO ITS ORIGINAL OR BETTER CONDITION IF DAMAGES ARE MADE AS A RESULT OF THE PROJECT'S CONSTRUCTION.
8. ALL WORK IN TEXAS DEPARTMENT OF TRANSPORTATION (TXDOT) AND/OR BEXAR COUNTY RIGHT–OF–WAY SHALL BE DONE IN ACCORDANCE WITH RESPECTIVE CONSTRUCTION SPECIFICATIONS AND PERMIT REQUIREMENTS.
9. THE CONTRACTOR SHALL COMPLY WITH CITY OF SAN ANTONIO OR OTHER GOVERNING MUNICIPALITY'S TREE ORDINANCES WHEN EXCAVATING NEAR TREES.
10. THE CONTRACTOR SHALL NOT PLACE ANY WASTE MATERIALS IN THE 100–YEAR FLOOD PLAIN WITHOUT FIRST OBTAINING AN APPROVED FLOOD PLAIN PERMIT.

    HOLIDAY WORK: CONTRACTORS WILL NOT BE ALLOWED TO PERFORM SAWS WORK ON SAWS RECOGNIZED HOLIDAYS. REQUEST SHOULD BE SENT TO CONSTWORKREQ@SAWS.ORG.

    WEEKEND WORK: CONTRACTORS ARE REQUIRED TO NOTIFY THE SAWS INSPECTION CONSTRUCTION DEPARTMENT 48 HOURS IN ADVANCE TO REQUEST WEEKEND WORK. REQUEST SHOULD BE SENT TO CONSTWORKREQ@SAWS.ORG.
11. ANY AND ALL SAWS UTILITY WORK INSTALLED WITHOUT HOLIDAY/WEEKEND APPROVAL WILL BE SUBJECT TO BE UNCOVERED FOR PROPER INSPECTION.
12. COMPACTION NOTE (ITEM 804): THE CONTRACTOR SHALL BE RESPONSIBLE FOR MEETING THE COMPACTION REQUIREMENTS ON ALL TRENCH BACKFILL AND FOR PAYING FOR THE TESTS PERFORMED BY A THIRD PARTY. COMPACTION TESTS WILL BE DONE AT ONE LOCATION POINT RANDOMLY SELECTED, OR AS INDICATED BY THE SAWS INSPECTOR AND/OR THE TEST ADMINISTRATOR, PER EACH 12–INCH LOOSE LIFT PER 400 LINEAR FEET AT A MINIMUM. THIS PROJECT WILL NOT BE ACCEPTED AND FINALIZED BY SAWS WITHOUT THIS REQUIREMENT BEING MET AND VERIFIED BY PROVIDING ALL NECESSARY DOCUMENTED TEST RESULTS.
13. A COPY OF ALL TESTING REPORTS SHALL BE FORWARDED TO SAWS CONSTRUCTION INSPECTION DIVISION.

SAWS WATER NOTES

1. PRIOR TO TIE–INS, ANY SHUTDOWNS OF EXISTING MAINS OF ANY SIZE MUST BE COORDINATED WITH THE SAWS CONSTRUCTION INSPECTION DIVISION AT LEAST ONE WEEK IN ADVANCE OF THE SHUTDOWN. THE CONTRACTOR MUST ALSO PROVIDE A SEQUENCE OF WORK AS RELATED TO THE TIE–INS; THIS IS AT NO ADDITIONAL COST TO SAWS OR THE PROJECT AND IT IS THE RESPONSIBILITY OF THE CONTRACTOR TO SEQUENCE THE WORK ACCORDINGLY.
   - FOR WATER MAINS 12" OR HIGHER: SAWS EMERGENCY OPERATIONS CENTER (210) 233–2014
2. ASBESTOS CEMENT (AC) PIPE, ALSO KNOWN AS TRANSITE PIPE WHICH IS KNOWN TO CONTAIN ASBESTOS– CONTAINING MATERIAL (ACM), MAY BE LOCATED WITHIN THE PROJECT LIMITS. SPECIAL WASTE MANAGEMENT PROCEDURES AND HEALTH AND SAFETY REQUIREMENTS WILL BE APPLICABLE WHEN REMOVAL AND/OR DISTURBANCE OF THIS PIPE OCCURS. SUCH WORK IS TO BE MADE UNDER SPECIAL SPECIFICATION ITEM NO. 3000, "SPECIAL SPECIFICATION FOR HANDLING ASBESTOS CEMENT PIPE".
3. VALVE REMOVAL: WHERE THE CONTRACTOR IS TO ABANDON A WATER MAIN, THE CONTROL VALVE LOCATED ON THE ABANDONING BRANCH WILL BE REMOVED AND REPLACED WITH A CAP/PLUG. (NSPI)
4. SUITABLE ANCHORAGE/THRUST BLOCKING OR JOINT RESTRAINT SHALL BE PROVIDED AT ALL OF THE FOLLOWING MAIN LOCATIONS: DEAD ENDS, PLUGS, CAPS, TEES, CROSSES, VALVES, AND BENDS, IN ACCORDANCE WITH THE STANDARD DRAWINGS DD–839 SERIES AND ITEM NO. 839, IN THE SAWS STANDARD SPECIFICATIONS FOR CONSTRUCTION.
5. ALL VALVES SHALL READ "OPEN RIGHT".
6. PRVS REQUIRED: CONTRACTOR TO VERIFY THAT NO PORTION OF THE TRACT IS BELOW GROUND ELEVATION OF 745 FEET WHERE THE STATIC PRESSURE WILL NORMALLY EXCEED 80 PSI. AT ALL SUCH LOCATIONS WHERE THE GROUND LEVEL IS BELOW 745 FEET, THE DEVELOPER OR BUILDER SHALL INSTALL AT EACH LOT, ON THE CUSTOMER'S SIDE OF THE METER, AN APPROVED TYPE PRESSURE REGULATOR IN CONFORMANCE WITH THE PLUMBING CODE OF THE CITY OF SAN ANTONIO. NO DUAL SERVICES ALLOWED FOR ANY LOT(S) IF *PRV IS/ARE REQUIRED FOR SUCH LOT(S), ONLY SINGLE SERVICE CONNECTIONS SHALL BE ALLOWED. *NOTE: A PRESSURE REGULATOR IS ALSO KNOWN AS A PRESSURE REDUCING VALVE (PRV).
7. PIPE DISINFECTION WITH DRY HTH FOR PROJECTS LESS THAN 800 LINEAR FEET. (ITEM NO. 847.3): MAINS SHALL BE DISINFECTED WITH DRY HTH WHERE SHOWN IN THE CONTRACT DOCUMENTS OR AS DIRECTED BY THE INSPECTOR, AND SHALL NOT EXCEED A TOTAL LENGTH OF 800 FEET. THIS METHOD OF DISINFECTION WILL ALSO BE FOLLOWED FOR MAIN REPAIRS. THE CONTRACTOR SHALL UTILIZE ALL APPROPRIATE SAFETY MEASURE TO PROTECT HIS PERSONNEL DURING DISINFECTION OPERATIONS.
8. BACKFLOW PREVENTION DEVICES:
   - ALL IRRIGATION SERVICES WITHIN RESIDENTIAL AREAS ARE REQUIRED TO HAVE BACKFLOW PREVENTION DEVICES.
   - ALL COMMERCIAL BACKFLOW PREVENTION DEVICES MUST BE APPROVED BY SAWS PRIOR TO INSTALLATION.
9. FINAL CONNECTION TO THE EXISTING WATER MAIN SHALL NOT BE MADE UNTIL THE WATER MAIN HAS BEEN PRESSURE TESTED, CHLORINATED, AND SAWS HAS RELEASED THE MAIN FOR TIE–IN AND USE.
10. DIVISION VALVES: DIVISION VALVES SHOWN ON PLANS OR NOT SHOWN ON PLANS BUT FOUND IN THE FIELD SHALL ONLY BE OPERATED BY SAWS DISTRIBUTION AND COLLECTION STAFF AND ONLY WITH PRIOR WRITTEN APPROVAL OF THE SAWS DIRECTOR OF PRODUCTION AND OPERATIONS AND PROPER COORDINATION WITH ALL SAWS DEPARTMENTS. CONTRACTOR SHALL PROVIDE WRITTEN NOTIFICATION TO THE INSPECTOR A MINIMUM OF TWO WEEKS IN ADVANCE TO START THE COORDINATION PROCESS AND WILL BE INFORMED BY THE INSPECTOR WHEN THE DIVISION VALVE WILL BE OPERATED BY THE SAWS DISTRIBUTION AND COLLECTION STAFF. THE DIVISION VALVE CAN ONLY BE OPERATED BY SAWS DISTRIBUTION AND COLLECTION STAFF MEMBER NOT THE INSPECTOR OR THE CONTRACTOR. OPERATION OF A DIVISION VALVE WITHOUT THE EXPRESS PRIOR WRITTEN APPROVAL OF THE SAWS DISTRIBUTION AND COLLECTION STAFF WILL CONSTITUTE A MATERIAL BREACH OF ANY WRITTEN SAWS CONTRACT OR PERMIT IN ADDITION TO SUBJECTING THE CONTRACTOR TO LIABILITY FOR ANY AND ALL FINES, FEES, OR OTHER DAMAGES, DIRECT OR CONSEQUENTIAL, THAT MAY ARISE FROM OR BE CAUSED BY THE OPERATION OF THE VALVE WITHOUT PRIOR WRITTEN PERMISSION. PLEASE BE INFORMED THAT THE APPROVAL OF THE OPERATION OR OPENING OR CLOSING OF A DIVISION VALVE CAN TAKE SEVERAL WEEKS FOR APPROVAL. DIVISION VALVES WILL ALSO HAVE A VALVE LID LABELED DIVISION VALVE AND A LOCKING MECHANISM INSTALLED WITH A KEY. THE LOCK AND KEY MECHANISM WILL BE PAID FOR BY THE CONTRACTOR BUT WILL BE INSTALLED BY SAWS DISTRIBUTION AND COLLECTION STAFF.

PROJECT WATER NOTES

1. MACHINE CHLORINATION BY THE S.A.W.S.
2. ALL 8", 12" AND 16" PIPE SHALL BE P.V.C. C–900 CLASS 235 DR 18.
3. ALL MAINS SHALL BE HYDROSTATICALLY TESTED BY THE CONTRACTOR, AS PROVIDED FOR IN THE SPECIAL CONDITIONS.
4. THE WATER LINES WILL BE SET FROM THE STREET HUBS BEFORE THIS CONTRACT BEGINS. STREET CUT SHEETS WILL BE SUPPLIED TO THE CONTRACTOR. THERE SHOULD BE NO ADDITIONAL STAKES REQUIRED, AND IT SHALL BE THE CONTRACTOR'S RESPONSIBILITY TO INSPECT THE SITE AND VERIFY THAT ALL STAKES REQUIRED FOR HIS WORK ARE IN PLACE AT THE TIME THE CONSTRUCTION BEGINS. IF ANY STAKES ARE MISSING THE ENGINEER SHOULD BE NOTIFIED IMMEDIATELY. AFTER CONSTRUCTION BEGINS, ALL CONSTRUCTION STAKES, MARKS, ETC., SHALL BE CAREFULLY PRESERVED BY THE CONTRACTOR, AND IN CASE OF DESTRUCTION OR REMOVAL BY THE CONTRACTOR, HIS EMPLOYEE OR ANY OTHER MEANS, SUCH STAKES, MARKS, ETC., SHALL BE REPLACED AT THE CONTRACTOR'S EXPENSE.
5. THE CONTRACTOR SHALL FURNISH THE ENGINEER WITH ALL THE FINAL MEASUREMENTS, TAPS AND LENGTH OF SERVICE CONNECTIONS.
6. THE LOT CORNERS WILL BE SET BY THE ENGINEER FOR INSTALLATION OF ALL WATER SERVICES. THESE LOT CORNERS SHALL BE CAREFULLY PRESERVED BY THE CONTRACTOR SO THE METER BOXES CAN BE SET IN PHASE II. ANY LOT CORNER DESTROYED OR REMOVED BY THE CONTRACTOR, HIS EMPLOYEES, OR BY ANY OTHER MEANS SHALL BE REPLACED AT THE CONTRACTOR'S EXPENSE.
7. STREETS WILL HAVE BEEN EXCAVATED DOWN TO SUBGRADE AND THE PARKWAY WILL BE CUT DOWN TO TOP OF CURB BY THE STREET CONTRACTOR, PRIOR TO CONSTRUCTION OF THE WATER MAINS. IT WILL BE THE UTILITY CONTRACTOR'S RESPONSIBILITY TO PROVIDE A PAD FOR HIS EQUIPMENT.
8. WATER METER BOXES IF APPLICABLE SHALL BE INSTALLED NINE FEET FROM FACE OF CURB TO CENTER OF THE METER BOX.
9. ALL GARBAGE OR SPOIL MATERIAL FROM THIS WORK SHALL BE REMOVED FROM THE SITE BY THE CONTRACTOR, AT HIS EXPENSE.
10. FINAL CONNECTION TO THE EXISTING WATER MAIN SHALL NOT BE MADE UNTIL WATER MAIN HAS BEEN PRESSURE TESTED, CHLORINATED AND THE S.A.W.S. RELEASES THE MAIN FOR TIE–IN AND USE.
11. UNIT PRICE BID FOR "STANDARD FIRE HYDRANT ASSEMBLY" SHALL INCLUDE FIRE HYDRANT, 6–INCH GATE VALVE AND 6–INCH VALVE BOX COMPLETE, ANCHOR BEND, AND ALL 6–INCH DI PIPE REQUIRED (DI PIPE REQUIRED SHALL INCLUDE ALL PIPE FROM THE TEE ON THE MAIN LINE TO THE FIRE HYDRANT).
12. WHEN SEWER LINES ARE INSTALLED IN THE VICINITY OF WATER MAINS, SUCH INSTALLATION SHALL BE IN STRICT ACCORDANCE WITH THE TEXAS NATURAL RESOURCE CONSERVATION COMMISSION "RULES AND REGULATIONS FOR PUBLIC WATER SYSTEMS" (1988 OR ANY REVISIONS THERETO).
13. A CLEAR SPACE SHALL BE PROVIDED AROUND ALL FIRE HYDRANTS. THIS AREA SHOULD HAVE A MINIMUM DIAMETER OF 3.0' AND BE CLEAN OF VERTICAL OBSTRUCTIONS, VALVES, AND METER BOXES.
14. SAWS REQUIRES LEAD FREE (< 0.25%) FIRE HYDRANTS.
15. UNLESS OTHERWISE NOTED ALL SERVICES SHALL BE 3/4" WITH 5/8" METER.

WATER (SAWS PRESSURE ZONE 930)

DEVELOPER'S NAME: STONEHILL UNITS 2B & 6A
ADDRESS: 5419 N LOOP 1604 E
CITY: SAN ANTONIO STATE: TEXAS ZIP: 78218
PHONE# (210) 496–2668 FAX#
SAWS BLOCK MAP# 66558 TOTAL EDU'S 92 TOTAL ACREAGE 18.171
TOTAL LINEAR FOOTAGE OF PIPE: 8" – 3,316 LF PLAT NO. 24–11800312
NUMBER OF LOTS 92 SAWS JOB NO. 24–1121

NO.	REVISION	DATE

CALEB M. CHANCE
98401
Caleb
12/20/24

PAPE-DAWSON ENGINEERS
2000 NW LOOP 410 I SAN ANTONIO, TX 78213 I 210.375.9000
TEXAS ENGINEERING FIRM #470 I TEXAS SURVEYING FIRM #10028800

STONEHILL UNITS 2B & 6A
SAN ANTONIO, TEXAS

WATER DISTRIBUTION PLAN NOTES

PLAT NO. 24-11800312
JOB NO. 12456–13
DATE JULY 2024
DESIGNER RA
CHECKED BL DRAWN EG
SHEET C4.11

Date: Dec 20, 2024, 10:00am User ID: ralvarez
File: P:\124\56\13\Design\Civil\WTDT-1245613.dwg

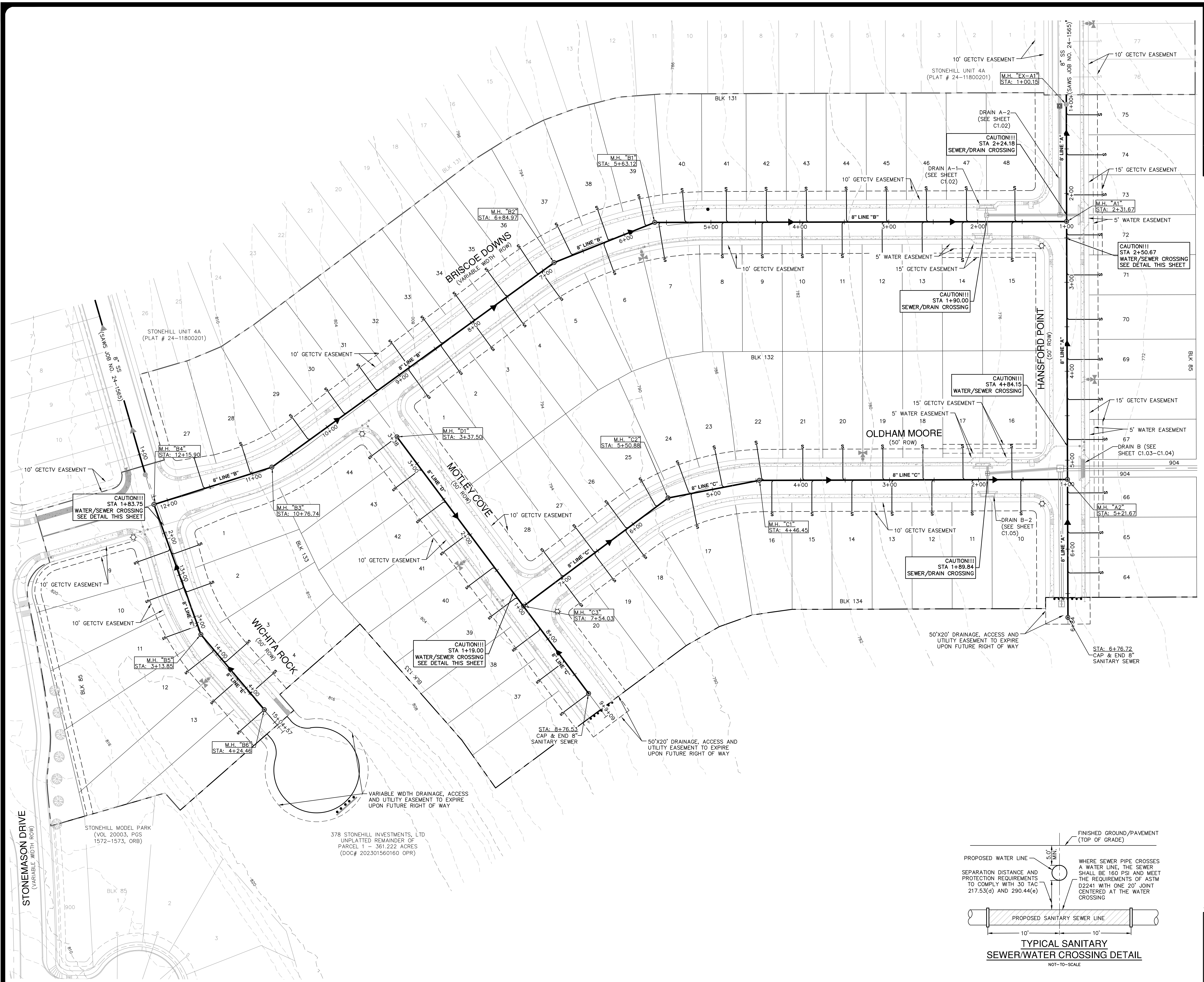
BRISCOE DOWNS
(VARIABLE WIDTH ROW)
MOTLEY COVE
(50' ROW)
WICHITA ROCK
(50' ROW)
OLDHAM MOORE
(50' ROW)
HANSFORD POINT
(50' ROW)
STONEMASON DRIVE
(VARIABLE WIDTH ROW)
STONEHILL UNIT 4A
(PLAT # 24-11800201)
8" SS
(SAWS JOB NO. 24-1565)
M.H. "EX-A1"
STA: 1+00.15
M.H. "A1"
STA: 2+31.67
M.H. "A2"
STA: 5+21.67
M.H. "B1"
STA: 5+63.12
M.H. "B2"
STA: 6+84.97
M.H. "B3"
STA: 10+76.74
M.H. "B4"
STA: 12+15.90
M.H. "B5"
STA: 3+13.85
M.H. "B6"
STA: 4+24.46
M.H. "C1"
STA: 4+46.45
M.H. "C2"
STA: 5+50.88
M.H. "C3"
STA: 7+54.03
M.H. "D1"
STA: 3+37.50
CAUTION!!!
STA 2+24.18
SEWER/DRAIN CROSSING
CAUTION!!!
STA 2+50.67
WATER/SEWER CROSSING
SEE DETAIL THIS SHEET
CAUTION!!!
STA 1+90.00
SEWER/DRAIN CROSSING
CAUTION!!!
STA 4+84.15
WATER/SEWER CROSSING
CAUTION!!!
STA 1+89.84
SEWER/DRAIN CROSSING
CAUTION!!!
STA 1+83.75
WATER/SEWER CROSSING
SEE DETAIL THIS SHEET
CAUTION!!!
STA 1+19.00
WATER/SEWER CROSSING
SEE DETAIL THIS SHEET
DRAIN A-2
(SEE SHEET C1.02)
DRAIN A-1
(SEE SHEET C1.02)
DRAIN B (SEE SHEET C1.03-C1.04)
DRAIN B-2
(SEE SHEET C1.05)
8" LINE "A"
8" LINE "B"
8" LINE "C"
8" LINE "D"
8" LINE "E"
10' GETCTV EASEMENT
15' GETCTV EASEMENT
5' WATER EASEMENT
STA: 6+76.72
CAP & END 8"
SANITARY SEWER
STA: 8+76.53
CAP & END 8"
SANITARY SEWER
50'X20' DRAINAGE, ACCESS AND UTILITY EASEMENT TO EXPIRE UPON FUTURE RIGHT OF WAY
VARIABLE WIDTH DRAINAGE, ACCESS AND UTILITY EASEMENT TO EXPIRE UPON FUTURE RIGHT OF WAY
BLK 131
BLK 132
BLK 133
BLK 134
BLK 85
904
STONEHILL MODEL PARK
(VOL 20003, PGS 1572-1573, ORB)
378 STONEHILL INVESTMENTS, LTD
UNPLATTED REMAINDER OF
PARCEL 1 - 361.222 ACRES
(DOC# 202301560160 OPR)

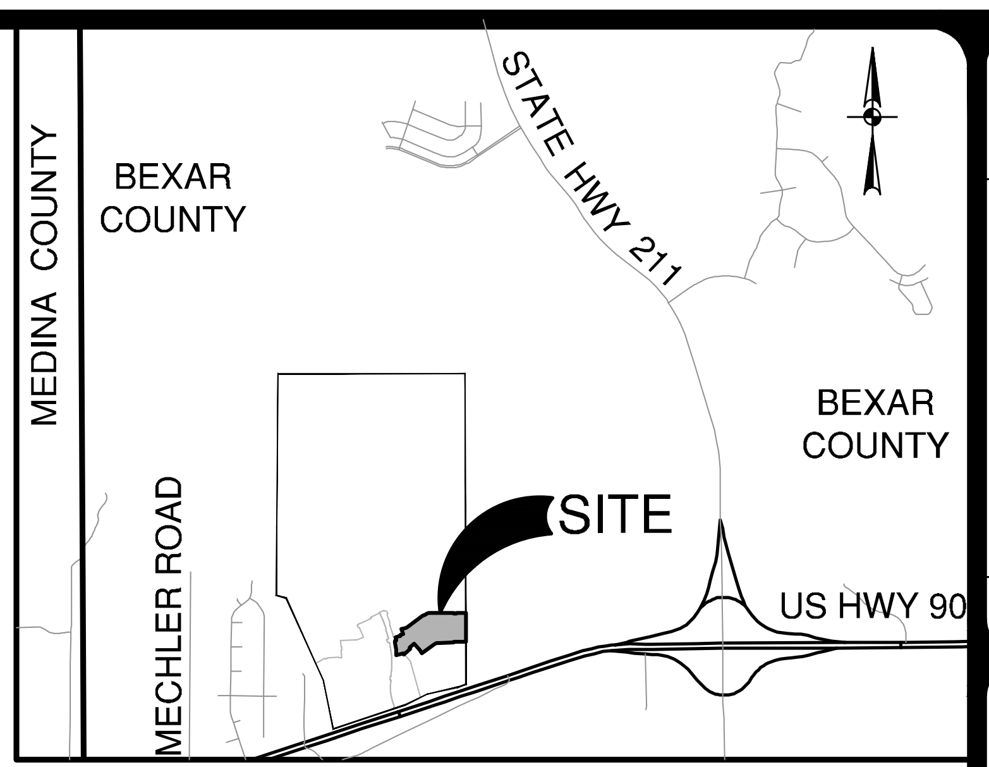
MEDINA COUNTY
BEXAR COUNTY
STATE HWY 211
BEXAR COUNTY
SITE
MECHLER ROAD
US HWY 90

LOCATION MAP

NOT-TO-SCALE

SCALE: 1"= 50'

0' 50' 100' 150'

SEWER LEGEND

PROJECT LIMITS	
EXISTING WATER	W
EXISTING SEWER	SS
PROPOSED SEWER	SS MANHOLE
PROPOSED WATER	W FIRE HYDRANT
PROPOSED SEWER LATERAL	S
FINISHED FLOOR ELEVATION FOR SEWER	FF = XXXX.XX

CAUTION!!

CONTRACTOR SHALL BE REQUIRED TO LOCATE ALL PUBLIC OR PRIVATE UTILITIES INCLUDING BUT NOT LIMITING TO: WATER, SEWER, TELEPHONE AND FIBER OPTIC LINES, SITE LIGHTING ELECTRIC, SECONDARY ELECTRIC, PRIMARY ELECTRICAL DUCTBANKS, LANDSCAPE IRRIGATION FACILITIES, AND GAS LINES. ANY UTILITY CONFLICTS THAT ARISE SHOULD BE COMMUNICATED TO THE ENGINEER IMMEDIATELY AND PRIOR TO CONSTRUCTION. THE CONTRACTOR SHALL CONTACT 1-800-DIG-TESS A MINIMUM OF 48 HOURS PRIOR TO THE START OF CONSTRUCTION. ANY DAMAGE TO EXISTING UTILITIES SHALL BE THE SOLE RESPONSIBILITY OF THE CONTRACTOR AND THE REPAIR SHALL BE AT CONTRACTOR'S SOLE EXPENSE WHETHER THE UTILITY IS SHOWN ON THESE PLANS OR NOT.

FINISHED FLOOR NOTES:

1. THE FINISHED FLOOR ELEVATIONS (FF) REPRESENT THE MINIMUM POSSIBLE FLOOR ELEVATION TO PROVIDE SANITARY SEWER SERVICE TO EACH LOT. ACTUAL FINISHED FLOOR ELEVATIONS FOR EACH LOT ARE TO BE DETERMINED BY THE BUILDER AND SHALL TAKE INTO CONSIDERATION AS-BUILT CONDITIONS FOR FOUND SEWER SERVICES AND ACTUAL LATERAL PLACEMENT. IT IS THE BUILDER'S SOLE RESPONSIBILITY TO DETERMINE ACTUAL FINISHED FLOOR ELEVATIONS FOR EACH LOT PRIOR TO THE START OF HOME FOUNDATION CONSTRUCTION TAKING INTO CONSIDERATION SITE DRAINAGE, STREET ACCESS AND SANITARY SEWER SERVICE ELEVATIONS.
2. THE MINIMUM SANITARY SEWER LATERAL GRADES WERE BASED UPON THE MINIMUM FINISHED FLOOR ELEVATIONS FOR THE LOTS LOCATED ON THE DOWNHILL SIDES OF THE PROPOSED ROADWAYS.

ROW PERMIT NOTE:

A BEXAR COUNTY PERMIT MUST BE OBTAINED BEFORE WORKING IN BEXAR COUNTY RIGHTS-OF-WAY.

TRENCH EXCAVATION SAFETY PROTECTION:

CONTRACTOR AND/ OR CONTRACTOR'S INDEPENDENTLY RETAINED EMPLOYEE OR STRUCTURAL DESIGN/ GEOTECHNICAL/ SAFETY/EQUIPMENT CONSULTANT, IF ANY, SHALL REVIEW THESE PLANS AND ANY AVAILABLE GEOTECHNICAL INFORMATION AND THE ANTICIPATED INSTALLATION SITES WITHIN THE PROJECT WORK AREA IN ORDER TO IMPLEMENT CONTRACTOR'S TRENCH EXCAVATION SAFETY PROTECTION SYSTEMS, PROGRAMS AND /OR PROCEDURES FOR THE PROJECT DESCRIBED IN THE CONTRACT DOCUMENTS. THE CONTRACTOR'S IMPLEMENTATION OF THESE SYSTEMS, PROGRAMS AND/OR PROCEDURES SHALL PROVIDE FOR ADEQUATE TRENCH EXCAVATION SAFETY PROTECTION THAT COMPLY WITH AS A MINIMUM, OSHA STANDARDS FOR TRENCH EXCAVATIONS. SPECIFICALLY, CONTRACTOR AND/OR CONTRACTOR'S INDEPENDENTLY RETAINED EMPLOYEE OR SAFETY CONSULTANT SHALL IMPLEMENT A TRENCH SAFETY PROGRAM IN ACCORDANCE WITH OSHA STANDARDS GOVERNING THE PRESENCE AND ACTIVITIES OF INDIVIDUALS WORKING IN AND AROUND TRENCH EXCAVATION.

FINISHED GROUND/PAVEMENT
(TOP OF GRADE)
5.0' MIN.
PROPOSED WATER LINE
SEPARATION DISTANCE AND PROTECTION REQUIREMENTS TO COMPLY WITH 30 TAC 217.53(d) AND 290.44(e)
WHERE SEWER PIPE CROSSES A WATER LINE, THE SEWER SHALL BE 160 PSI AND MEET THE REQUIREMENTS OF ASTM D2241 WITH ONE 20' JOINT CENTERED AT THE WATER CROSSING
PROPOSED SANITARY SEWER LINE
10'
10'

TYPICAL SANITARY SEWER/WATER CROSSING DETAIL

NOT-TO-SCALE

SEWER (DOS RIOS WRC)

DEVELOPER'S NAME: CONTINENTAL HOMES OF TEXAS, L.P.
ADDRESS: 5419 N LOOP 1604 E
CITY: SAN ANTONIO STATE: TEXAS ZIP: 78218
PHONE# (210) 496-2668 FAX#
SAWS BLOCK MAP# 66558 TOTAL EDU'S 92 TOTAL ACREAGE 18.171
TOTAL LINEAR FOOTAGE OF PIPE: 8" – 3,202 LF PLAT NO. 24-11800312
NUMBER OF LOTS 92 SAWS JOB NO. 24-1594

NO.	REVISION	DATE

STATE OF TEXAS
CALEB M. CHANCE
98401
LICENSED PROFESSIONAL ENGINEER

Caleb M. Chance 1/23/25

PAPE-DAWSON ENGINEERS

2000 NW LOOP 410 I SAN ANTONIO, TX 78213 I 210.375.9000
TEXAS ENGINEERING FIRM #470 I TEXAS SURVEYING FIRM #10028800

STONEHILL UNITS 2B & 6A

SAN ANTONIO, TEXAS

OVERALL SANITARY SEWER PLAN

PLAT NO. 24-11800312
JOB NO. 12456-13
DATE JULY 2024
DESIGNER RA
CHECKED BL DRAWN EG
SHEET C5.00

Date: Jan 22, 2025, 1:27pm User ID: ralvarez
File: P:\124\56\13\Design\Civil\SSOA-1245613.dwg

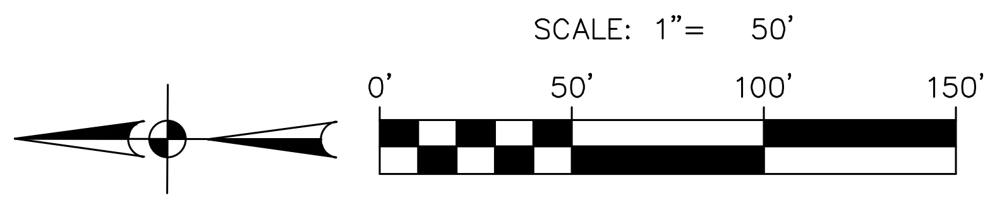
SCALE: 1"= 50'
0'
50'
100'
150'

SEWER LEGEND

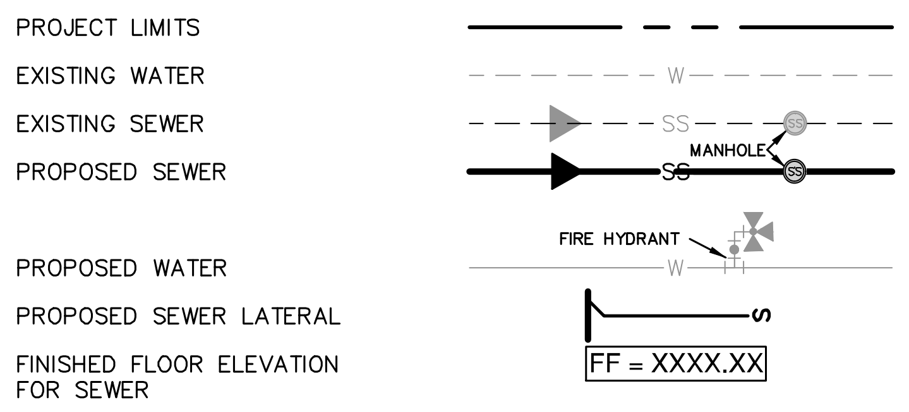
PROJECT LIMITS
EXISTING WATER
W
EXISTING SEWER
SS
PROPOSED SEWER
SS
MANHOLE
FIRE HYDRANT
PROPOSED WATER
W
PROPOSED SEWER LATERAL
S
FINISHED FLOOR ELEVATION FOR SEWER
FF = XXXX.XX

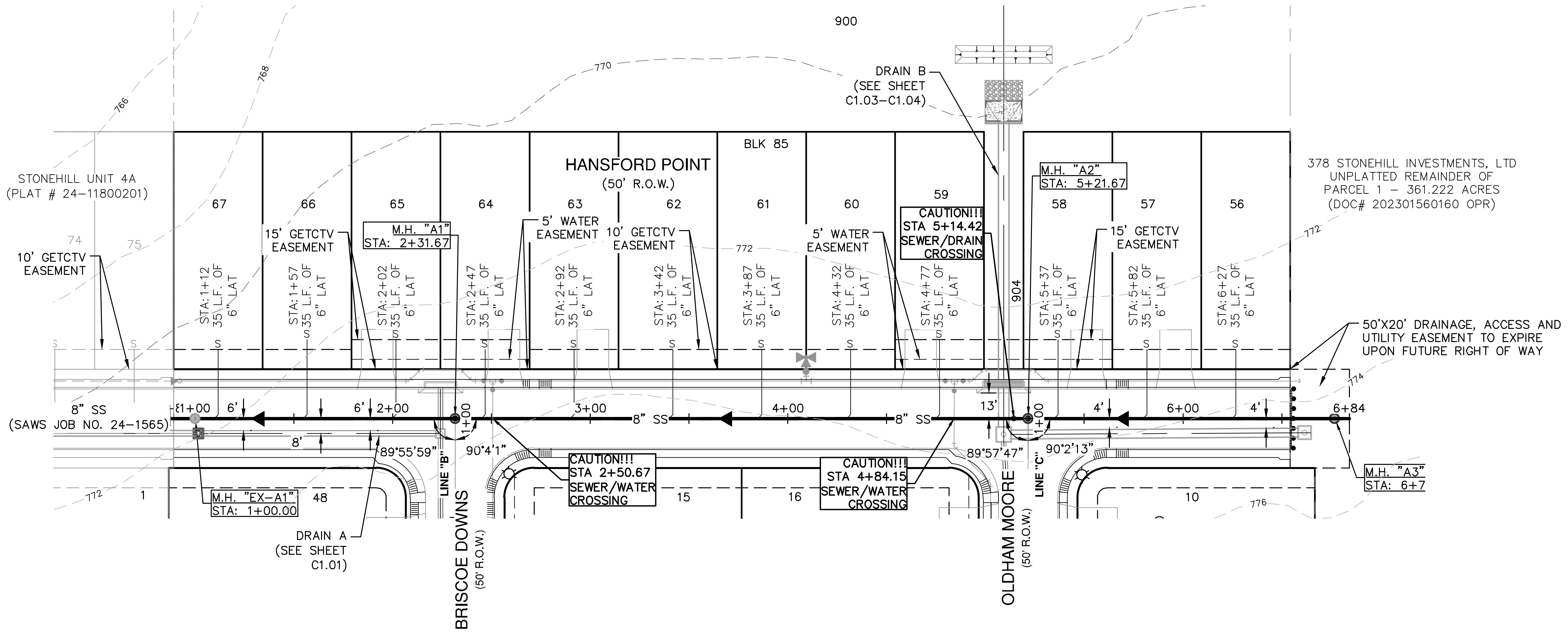
900
770
768
766
772
774
776
STONEHILL UNIT 4A
(PLAT # 24-11800201)
74
75
10' GETCTV EASEMENT
67
66
65
64
63
62
61
60
59
58
57
56
BLK 85
HANSFORD POINT
(50' R.O.W.)
15' GETCTV EASEMENT
M.H. "A1"
STA: 2+31.67
5' WATER EASEMENT
10' GETCTV EASEMENT
5' WATER EASEMENT
CAUTION!!!
STA 5+14.42
SEWER/DRAIN CROSSING
DRAIN B
(SEE SHEET C1.03-C1.04)
904
M.H. "A2"
STA: 5+21.67
15' GETCTV EASEMENT
378 STONEHILL INVESTMENTS, LTD
UNPLATTED REMAINDER OF
PARCEL 1 – 361.222 ACRES
(DOC# 202301560160 OPR)
STA:1+12 35 L.F. OF 6" LAT
STA:1+57 35 L.F. OF 6" LAT
STA:2+02 35 L.F. OF 6" LAT
STA:2+47 35 L.F. OF 6" LAT
STA:2+92 35 L.F. OF 6" LAT
STA:3+42 35 L.F. OF 6" LAT
STA:3+87 35 L.F. OF 6" LAT
STA:4+32 35 L.F. OF 6" LAT
STA:4+77 35 L.F. OF 6" LAT
STA:5+37 35 L.F. OF 6" LAT
STA:5+82 35 L.F. OF 6" LAT
STA:6+27 35 L.F. OF 6" LAT
50'X20' DRAINAGE, ACCESS AND UTILITY EASEMENT TO EXPIRE UPON FUTURE RIGHT OF WAY
8" SS
(SAWS JOB NO. 24-1565)
1+00
6'
8'
2+00
3+00
4+00
8" SS
13'
4'
6+00
6+84
89°55'59"
90°4'1"
89°57'47"
90°2'13"
LINE "B"
LINE "C"
M.H. "EX-A1"
STA: 1+00.00
1
48
15
16
10
DRAIN A
(SEE SHEET C1.01)
BRISCOE DOWNS
(50' R.O.W.)
CAUTION!!!
STA 2+50.67
SEWER/WATER CROSSING
CAUTION!!!
STA 4+84.15
SEWER/WATER CROSSING
OLDHAM MOORE
(50' R.O.W.)
M.H. "A3"
STA: 6+7

SANITARY SEWER LINE "A"
STA. 1+00.00 TO END

VERTICAL SCALE: 1" = 5'
HORIZONTAL SCALE: 1" = 50'

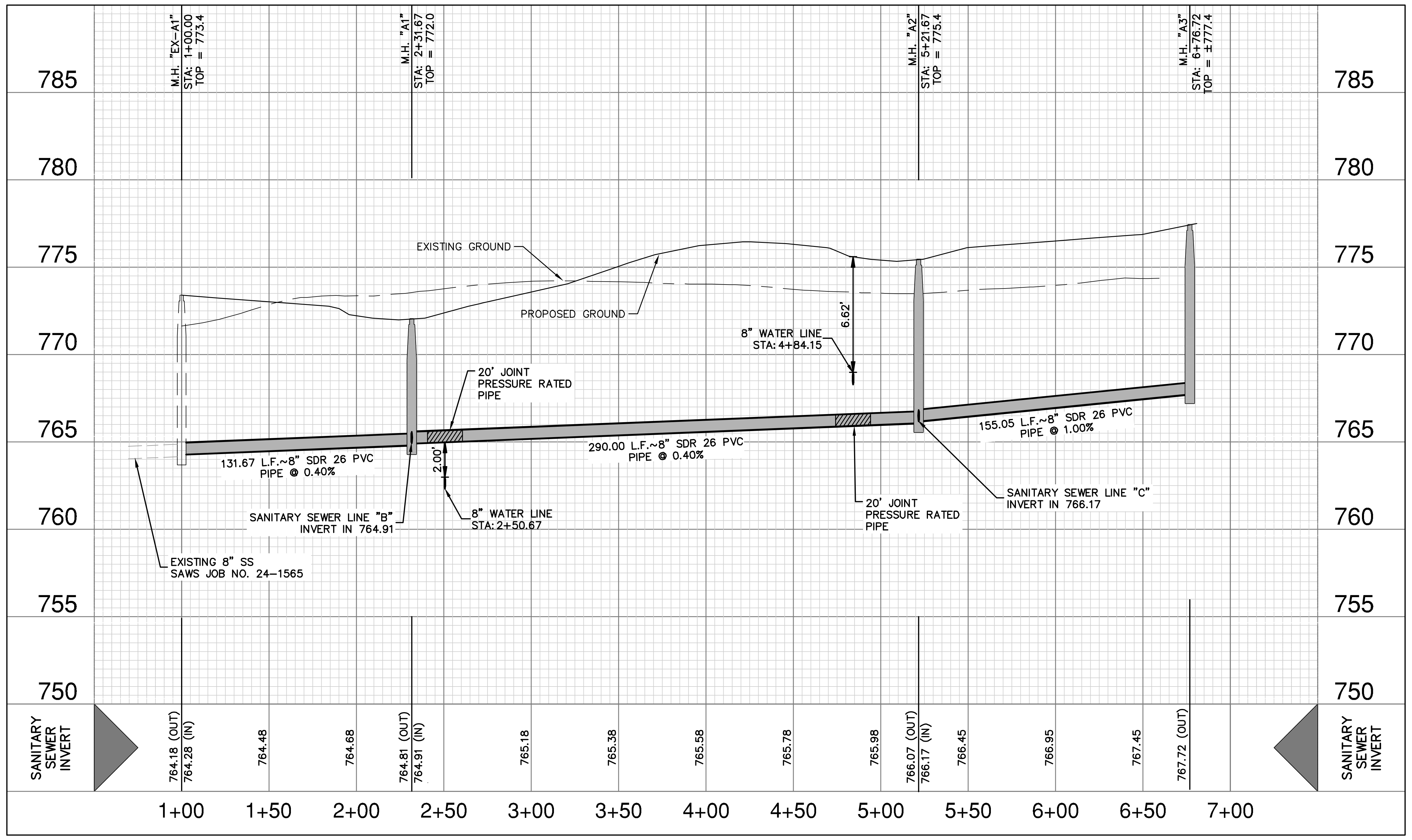

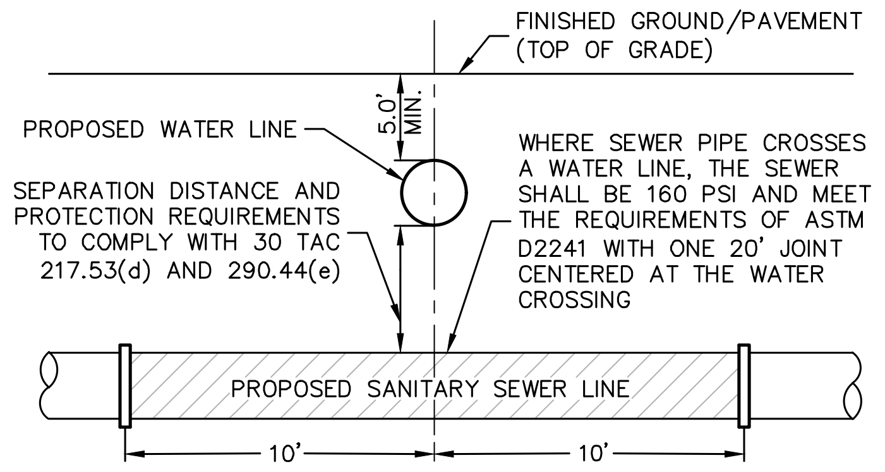
FINISHED GROUND/PAVEMENT (TOP OF GRADE)
PROPOSED WATER LINE
5.0' MIN.
SEPARATION DISTANCE AND PROTECTION REQUIREMENTS TO COMPLY WITH 30 TAC 217.53(d) AND 290.44(e)
WHERE SEWER PIPE CROSSES A WATER LINE, THE SEWER SHALL BE 160 PSI AND MEET THE REQUIREMENTS OF ASTM D2241 WITH ONE 20' JOINT CENTERED AT THE WATER CROSSING
PROPOSED SANITARY SEWER LINE
10'
10'

TYPICAL SANITARY SEWER/WATER CROSSING DETAIL
NOT-TO-SCALE

CAUTION!!

CONTRACTOR SHALL BE REQUIRED TO LOCATE ALL PUBLIC OR PRIVATE UTILITIES INCLUDING BUT NOT LIMITING TO: WATER, SEWER, TELEPHONE AND FIBER OPTIC LINES, SITE LIGHTING ELECTRIC, SECONDARY ELECTRIC, PRIMARY ELECTRICAL DUCTBANKS, LANDSCAPE IRRIGATION FACILITIES, AND GAS LINES. ANY UTILITY CONFLICTS THAT ARISE SHOULD BE COMMUNICATED TO THE ENGINEER IMMEDIATELY AND PRIOR TO CONSTRUCTION. THE CONTRACTOR SHALL CONTACT 1-800-DIG-TESS A MINIMUM OF 48 HOURS PRIOR TO THE START OF CONSTRUCTION. ANY DAMAGE TO EXISTING UTILITIES SHALL BE THE SOLE RESPONSIBILITY OF THE CONTRACTOR AND THE REPAIR SHALL BE AT CONTRACTOR'S SOLE EXPENSE WHETHER THE UTILITY IS SHOWN ON THESE PLANS OR NOT.

TRENCH EXCAVATION SAFETY PROTECTION:

CONTRACTOR AND/ OR CONTRACTOR'S INDEPENDENTLY RETAINED EMPLOYEE OR STRUCTURAL DESIGN/ GEOTECHNICAL/ SAFETY/EQUIPMENT CONSULTANT, IF ANY, SHALL REVIEW THESE PLANS AND ANY AVAILABLE GEOTECHNICAL INFORMATION AND THE ANTICIPATED INSTALLATION SITES WITHIN THE PROJECT WORK AREA IN ORDER TO IMPLEMENT CONTRACTOR'S TRENCH EXCAVATION SAFETY PROTECTION SYSTEMS, PROGRAMS AND /OR PROCEDURES FOR THE PROJECT DESCRIBED IN THE CONTRACT DOCUMENTS. THE CONTRACTOR'S IMPLEMENTATION OF THESE SYSTEMS, PROGRAMS AND/OR PROCEDURES SHALL PROVIDE FOR ADEQUATE TRENCH EXCAVATION SAFETY PROTECTION THAT COMPLY WITH AS A MINIMUM, OSHA STANDARDS FOR TRENCH EXCAVATIONS. SPECIFICALLY, CONTRACTOR AND/OR CONTRACTOR'S INDEPENDENTLY RETAINED EMPLOYEE OR SAFETY CONSULTANT SHALL IMPLEMENT A TRENCH SAFETY PROGRAM IN ACCORDANCE WITH OSHA STANDARDS GOVERNING THE PRESENCE AND ACTIVITIES OF INDIVIDUALS WORKING IN AND AROUND TRENCH EXCAVATION.

SEWER (DOS RIOS WRC)

DEVELOPER'S NAME: CONTINENTAL HOMES OF TEXAS, L.P.
ADDRESS: 5419 N LOOP 1604 E
CITY: SAN ANTONIO STATE: TEXAS ZIP: 78218
PHONE# (210) 496-2668 FAX#
SAWS BLOCK MAP# 66558 TOTAL EDU'S 92 TOTAL ACREAGE 18.171
TOTAL LINEAR FOOTAGE OF PIPE: 8" – 3,202 LF PLAT NO. 24-11800312
NUMBER OF LOTS 92 SAWS JOB NO. 24-1594

NO.	REVISION	DATE

CALEB M. CHANCE
98401
1/23/25

PAPE-DAWSON ENGINEERS
2000 NW LOOP 410 I SAN ANTONIO, TX 78213 I 210.375.9000
TEXAS ENGINEERING FIRM #470 I TEXAS SURVEYING FIRM #10028800

STONEHILL UNITS 2B & 6A
SAN ANTONIO, TEXAS

SANITARY SEWER LINE A PLAN & PROFILE
(STA. 1+00.00 TO END)

PLAT NO. 24-11800312
JOB NO. 12456-13
DATE JULY 2024
DESIGNER RA
CHECKED BL DRAWN EG
SHEET C5.01

Date: Jan 22, 2025, 1:28pm User ID: ralvarez
File: P:\124\56\13\Design\Civil\SSA1-1245613.dwg

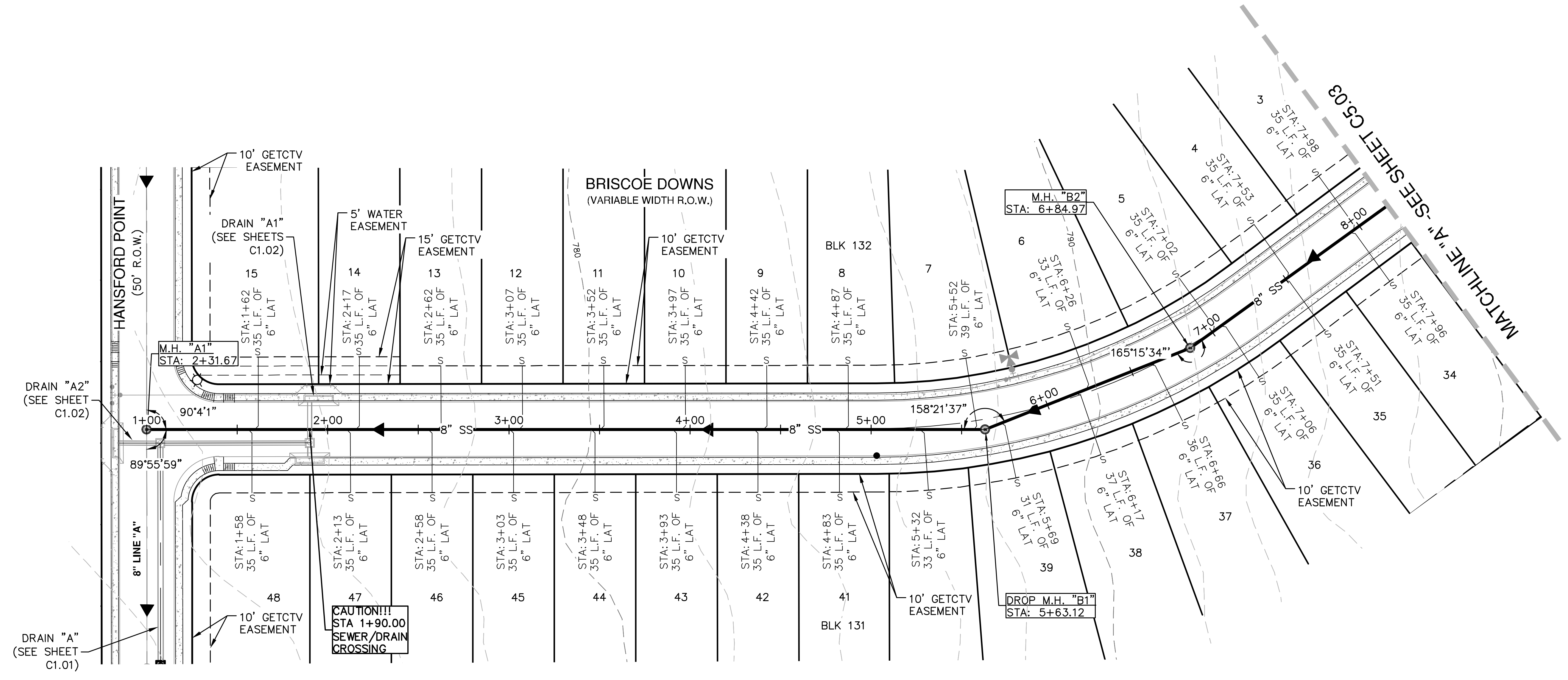
HANSFORD POINT
(50' R.O.W.)
BRISCOE DOWNS
(VARIABLE WIDTH R.O.W.)
10' GETCTV EASEMENT
DRAIN "A1" (SEE SHEETS C1.02)
5' WATER EASEMENT
15' GETCTV EASEMENT
10' GETCTV EASEMENT
DRAIN "A2" (SEE SHEET C1.02)
DRAIN "A" (SEE SHEET C1.01)
8" LINE "A"
M.H. "A1"
STA: 2+31.67
1+00
2+00
3+00
4+00
5+00
6+00
7+00
8+00
8" SS
90°4'1"
89°55'59"
158°21'37"
165°15'34"
CAUTION!!!
STA 1+90.00
SEWER/DRAIN
CROSSING
BLK 132
BLK 131
15
14
13
12
11
10
9
8
7
6
5
4
3
48
47
46
45
44
43
42
41
39
38
37
36
35
34
780
790
STA:1+62 35 L.F. OF 6" LAT
STA:2+17 35 L.F. OF 6" LAT
STA:2+62 35 L.F. OF 6" LAT
STA:3+07 35 L.F. OF 6" LAT
STA:3+52 35 L.F. OF 6" LAT
STA:3+97 35 L.F. OF 6" LAT
STA:4+42 35 L.F. OF 6" LAT
STA:4+87 35 L.F. OF 6" LAT
STA:5+52 39 L.F. OF 6" LAT
STA:6+26 33 L.F. OF 6" LAT
STA:7+02 35 L.F. OF 6" LAT
STA:7+53 35 L.F. OF 6" LAT
STA:7+98 35 L.F. OF 6" LAT
STA:1+58 35 L.F. OF 6" LAT
STA:2+13 35 L.F. OF 6" LAT
STA:2+58 35 L.F. OF 6" LAT
STA:3+03 35 L.F. OF 6" LAT
STA:3+48 35 L.F. OF 6" LAT
STA:3+93 35 L.F. OF 6" LAT
STA:4+38 35 L.F. OF 6" LAT
STA:4+83 35 L.F. OF 6" LAT
STA:5+32 33 L.F. OF 6" LAT
STA:5+69 31 L.F. OF 6" LAT
STA:6+17 37 L.F. OF 6" LAT
STA:6+66 36 L.F. OF 6" LAT
STA:7+06 35 L.F. OF 6" LAT
STA:7+51 35 L.F. OF 6" LAT
STA:7+96 35 L.F. OF 6" LAT
M.H. "B2"
STA: 6+84.97
DROP M.H. "B1"
STA: 5+63.12
10' GETCTV EASEMENT
MATCHLINE "A" -SEE SHEET C5.03

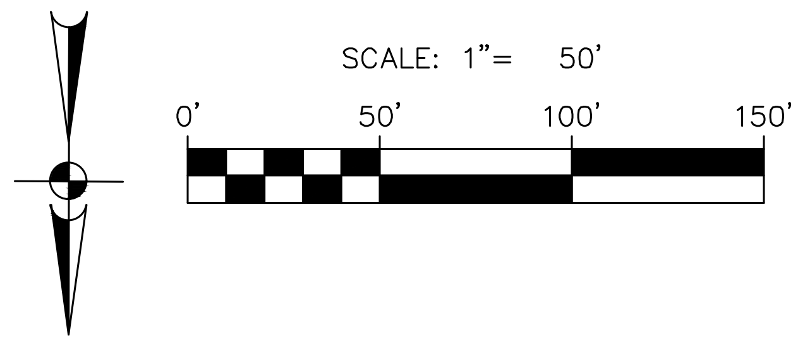
SCALE: 1"= 50'
0'
50'
100'
150'

SEWER LEGEND

PROJECT LIMITS	— — —
EXISTING WATER	— W —
EXISTING SEWER	— SS — (SS)
PROPOSED SEWER	— SS — (SS) MANHOLE
PROPOSED WATER	— W — FIRE HYDRANT
PROPOSED SEWER LATERAL	— S
FINISHED FLOOR ELEVATION FOR SEWER	FF = XXXX.XX

NO.	REVISION	DATE

CALEB M. CHANCE
98401

1/23/25

SANITARY SEWER LINE "B"
STA. 1+00.00 TO 8+00.00

VERTICAL SCALE: 1" = 5'
HORIZONTAL SCALE: 1" = 50'

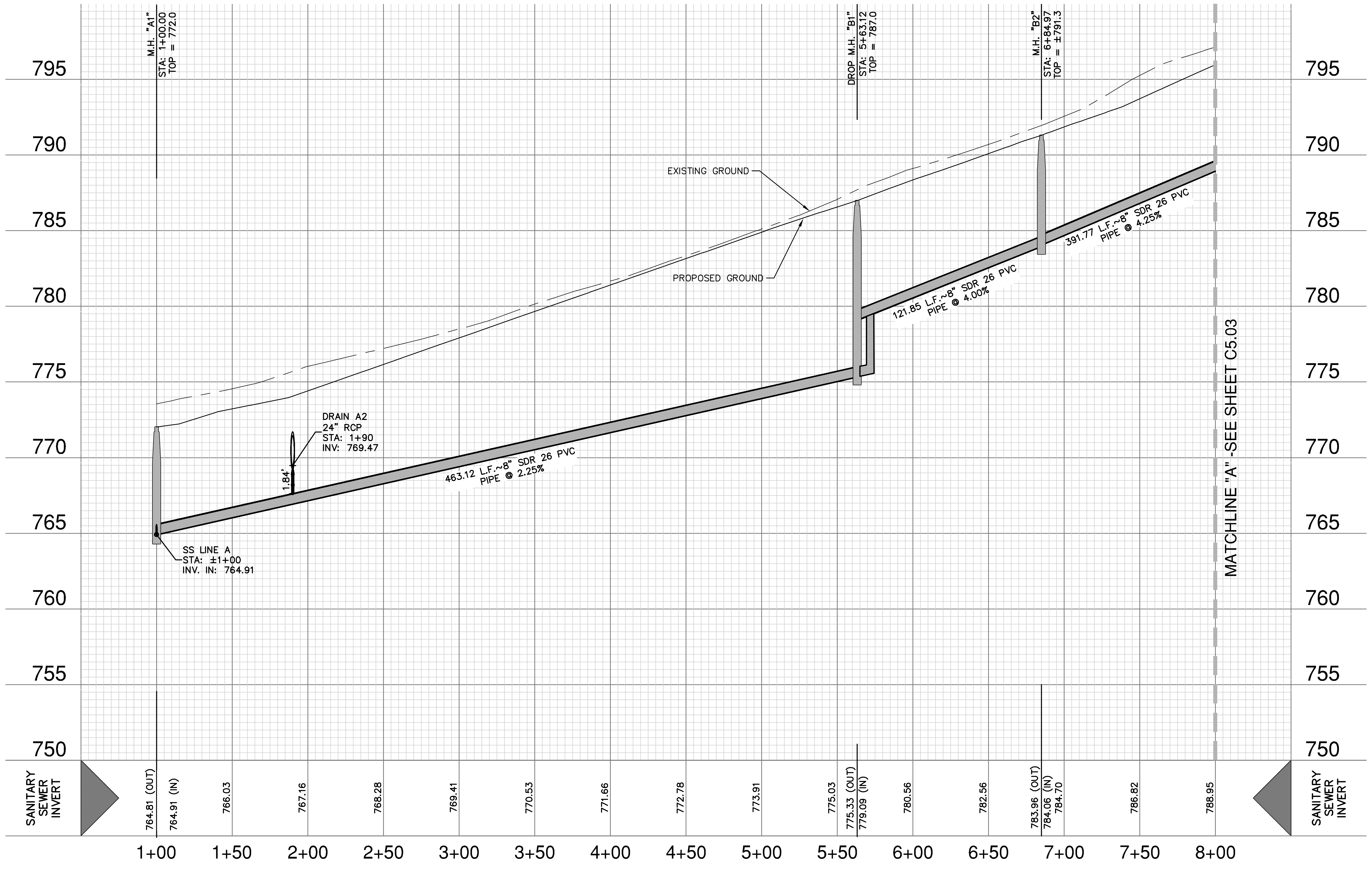
795
790
785
780
775
770
765
760
755
750
M.H. "A1"
STA: 1+00.00
TOP = 772.0
DROP M.H. "B1"
STA: 5+63.12
TOP = 787.0
M.H. "B2"
STA: 6+84.97
TOP = ±791.3
EXISTING GROUND
PROPOSED GROUND
DRAIN A2
24" RCP
STA: 1+90
INV: 769.47
1.84'
463.12 L.F.~8" SDR 26 PVC PIPE @ 2.25%
121.85 L.F.~8" SDR 26 PVC PIPE @ 4.00%
391.77 L.F.~8" SDR 26 PVC PIPE @ 4.25%
SS LINE A
STA: ±1+00
INV. IN: 764.91
MATCHLINE "A" -SEE SHEET C5.03
SANITARY SEWER INVERT
764.81 (OUT)
764.91 (IN)
766.03
767.16
768.28
769.41
770.53
771.66
772.78
773.91
775.03
775.33 (OUT)
779.09 (IN)
780.56
782.56
783.96 (OUT)
784.06 (IN)
784.70
786.82
788.95
1+00
1+50
2+00
2+50
3+00
3+50
4+00
4+50
5+00
5+50
6+00
6+50
7+00
7+50
8+00

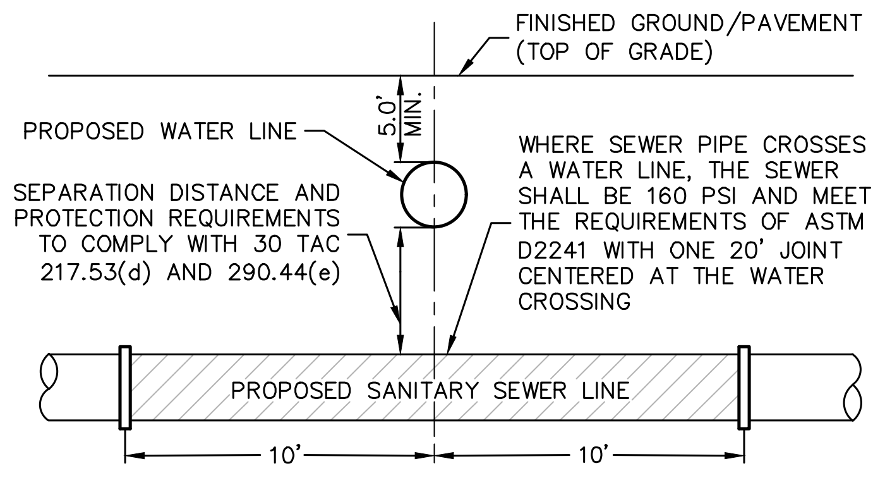
FINISHED GROUND/PAVEMENT (TOP OF GRADE)
5.0' MIN.
PROPOSED WATER LINE
SEPARATION DISTANCE AND PROTECTION REQUIREMENTS TO COMPLY WITH 30 TAC 217.53(d) AND 290.44(e)
WHERE SEWER PIPE CROSSES A WATER LINE, THE SEWER SHALL BE 160 PSI AND MEET THE REQUIREMENTS OF ASTM D2241 WITH ONE 20' JOINT CENTERED AT THE WATER CROSSING
PROPOSED SANITARY SEWER LINE
10'
10'

TYPICAL SANITARY SEWER/WATER CROSSING DETAIL

NOT-TO-SCALE

CAUTION!!

CONTRACTOR SHALL BE REQUIRED TO LOCATE ALL PUBLIC OR PRIVATE UTILITIES INCLUDING BUT NOT LIMITING TO: WATER, SEWER, TELEPHONE AND FIBER OPTIC LINES, SITE LIGHTING ELECTRIC, SECONDARY ELECTRIC, PRIMARY ELECTRICAL DUCTBANKS, LANDSCAPE IRRIGATION FACILITIES, AND GAS LINES. ANY UTILITY CONFLICTS THAT ARISE SHOULD BE COMMUNICATED TO THE ENGINEER IMMEDIATELY AND PRIOR TO CONSTRUCTION. THE CONTRACTOR SHALL CONTACT 1-800-DIG-TESS A MINIMUM OF 48 HOURS PRIOR TO THE START OF CONSTRUCTION. ANY DAMAGE TO EXISTING UTILITIES SHALL BE THE SOLE RESPONSIBILITY OF THE CONTRACTOR AND THE REPAIR SHALL BE AT CONTRACTOR'S SOLE EXPENSE WHETHER THE UTILITY IS SHOWN ON THESE PLANS OR NOT.

TRENCH EXCAVATION SAFETY PROTECTION:

CONTRACTOR AND/ OR CONTRACTOR'S INDEPENDENTLY RETAINED EMPLOYEE OR STRUCTURAL DESIGN/ GEOTECHNICAL/ SAFETY/EQUIPMENT CONSULTANT, IF ANY, SHALL REVIEW THESE PLANS AND ANY AVAILABLE GEOTECHNICAL INFORMATION AND THE ANTICIPATED INSTALLATION SITES WITHIN THE PROJECT WORK AREA IN ORDER TO IMPLEMENT CONTRACTOR'S TRENCH EXCAVATION SAFETY PROTECTION SYSTEMS, PROGRAMS AND /OR PROCEDURES FOR THE PROJECT DESCRIBED IN THE CONTRACT DOCUMENTS. THE CONTRACTOR'S IMPLEMENTATION OF THESE SYSTEMS, PROGRAMS AND/OR PROCEDURES SHALL PROVIDE FOR ADEQUATE TRENCH EXCAVATION SAFETY PROTECTION THAT COMPLY WITH AS A MINIMUM, OSHA STANDARDS FOR TRENCH EXCAVATIONS. SPECIFICALLY, CONTRACTOR AND/OR CONTRACTOR'S INDEPENDENTLY RETAINED EMPLOYEE OR SAFETY CONSULTANT SHALL IMPLEMENT A TRENCH SAFETY PROGRAM IN ACCORDANCE WITH OSHA STANDARDS GOVERNING THE PRESENCE AND ACTIVITIES OF INDIVIDUALS WORKING IN AND AROUND TRENCH EXCAVATION.

SEWER (DOS RIOS WRC)

DEVELOPER'S NAME: CONTINENTAL HOMES OF TEXAS, L.P.
ADDRESS: 5419 N LOOP 1604 E
CITY: SAN ANTONIO STATE: TEXAS ZIP: 78218
PHONE# (210) 496-2668 FAX#
SAWS BLOCK MAP# 66558 TOTAL EDU'S 92 TOTAL ACREAGE 18.171
TOTAL LINEAR FOOTAGE OF PIPE: 8" – 3,202 LF PLAT NO. 24-11800312
NUMBER OF LOTS 92 SAWS JOB NO. 24-1594

PAPE-DAWSON ENGINEERS
2000 NW LOOP 410 I SAN ANTONIO, TX 78213 I 210.375.9000
TEXAS ENGINEERING FIRM #470 I TEXAS SURVEYING FIRM #10028800

STONEHILL UNITS 2B & 6A
SAN ANTONIO, TEXAS

SANITARY SEWER LINE B PLAN & PROFILE
STA 1+00.00 TO 8+00.00

PLAT NO. 24-11800312
JOB NO. 12456-13
DATE JULY 2024
DESIGNER RA
CHECKED BL DRAWN EG
SHEET C5.02

Date: Jan 22, 2025, 1:29pm User ID: ralvarez
File: P:\124\56\13\Design\Civil\SSB-1245613.dwg

SCALE: 1"= 50'

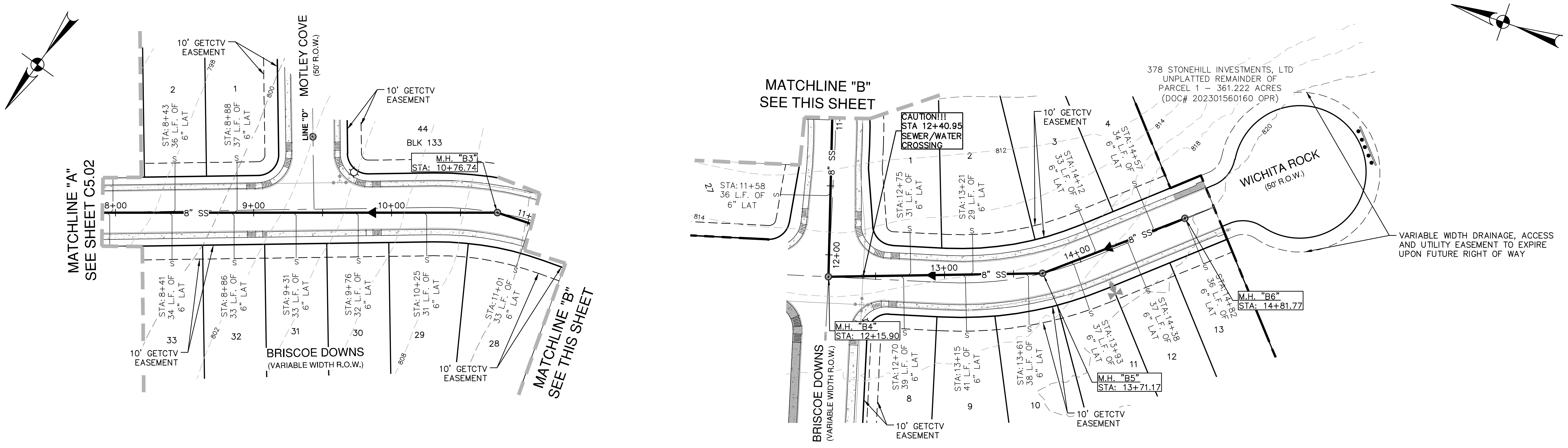
10' GETCTV EASEMENT
MOTLEY COVE
(50' R.O.W.)
LINE "D"
10' GETCTV EASEMENT
44
BLK 133
M.H. "B3"
STA: 10+76.74
2
1
STA: 8+43
36 L.F. OF
6" LAT
STA: 8+88
37 L.F. OF
6" LAT
798
800
MATCHLINE "A"
SEE SHEET C5.02
8+00
8" SS
9+00
10+00
11+
STA: 8+41
34 L.F. OF
6" LAT
STA: 8+86
33 L.F. OF
6" LAT
STA: 9+31
33 L.F. OF
6" LAT
STA: 9+76
32 L.F. OF
6" LAT
STA: 10+25
31 L.F. OF
6" LAT
STA: 11+01
33 L.F. OF
6" LAT
33
32
31
30
29
28
802
808
10' GETCTV EASEMENT
BRISCOE DOWNS
(VARIABLE WIDTH R.O.W.)
10' GETCTV EASEMENT
MATCHLINE "B"
SEE THIS SHEET
MATCHLINE "B"
SEE THIS SHEET
CAUTION!!!
STA 12+40.95
SEWER/WATER
CROSSING
10' GETCTV EASEMENT
378 STONEHILL INVESTMENTS, LTD
UNPLATTED REMAINDER OF
PARCEL 1 – 361.222 ACRES
(DOC# 202301560160 OPR)
27
STA: 11+58
36 L.F. OF
6" LAT
814
8" SS
11
12+00
1
2
3
4
812
STA: 12+75
31 L.F. OF
6" LAT
STA: 13+21
29 L.F. OF
6" LAT
STA: 14+12
33 L.F. OF
6" LAT
STA: 14+57
34 L.F. OF
6" LAT
814
818
820
WICHITA ROCK
(50' R.O.W.)
VARIABLE WIDTH DRAINAGE, ACCESS AND UTILITY EASEMENT TO EXPIRE UPON FUTURE RIGHT OF WAY
13+00
8" SS
14+00
8" SS
M.H. "B4"
STA: 12+15.90
M.H. "B5"
STA: 13+71.17
M.H. "B6"
STA: 14+81.77
BRISCOE DOWNS
(VARIABLE WIDTH R.O.W.)
STA: 12+70
39 L.F. OF
6" LAT
STA: 13+15
41 L.F. OF
6" LAT
STA: 13+61
38 L.F. OF
6" LAT
STA: 13+93
37 L.F. OF
6" LAT
STA: 14+38
37 L.F. OF
6" LAT
STA: 14+82
36 L.F. OF
6" LAT
8
9
10
11
12
13
10' GETCTV EASEMENT
10' GETCTV EASEMENT

SEWER LEGEND

PROJECT LIMITS	─── ─ ─ ───
EXISTING WATER	– – – W – – –
EXISTING SEWER	– – ▶ – SS – – ● – –
PROPOSED SEWER	──▶── SS ──●── MANHOLE
PROPOSED WATER	── W ── FIRE HYDRANT
PROPOSED SEWER LATERAL	┗── S
FINISHED FLOOR ELEVATION FOR SEWER	FF = XXXX.XX

SANITARY SEWER LINE "B"
STA. 8+00.00 TO END

VERTICAL SCALE: 1" = 5'
HORIZONTAL SCALE: 1" = 50'

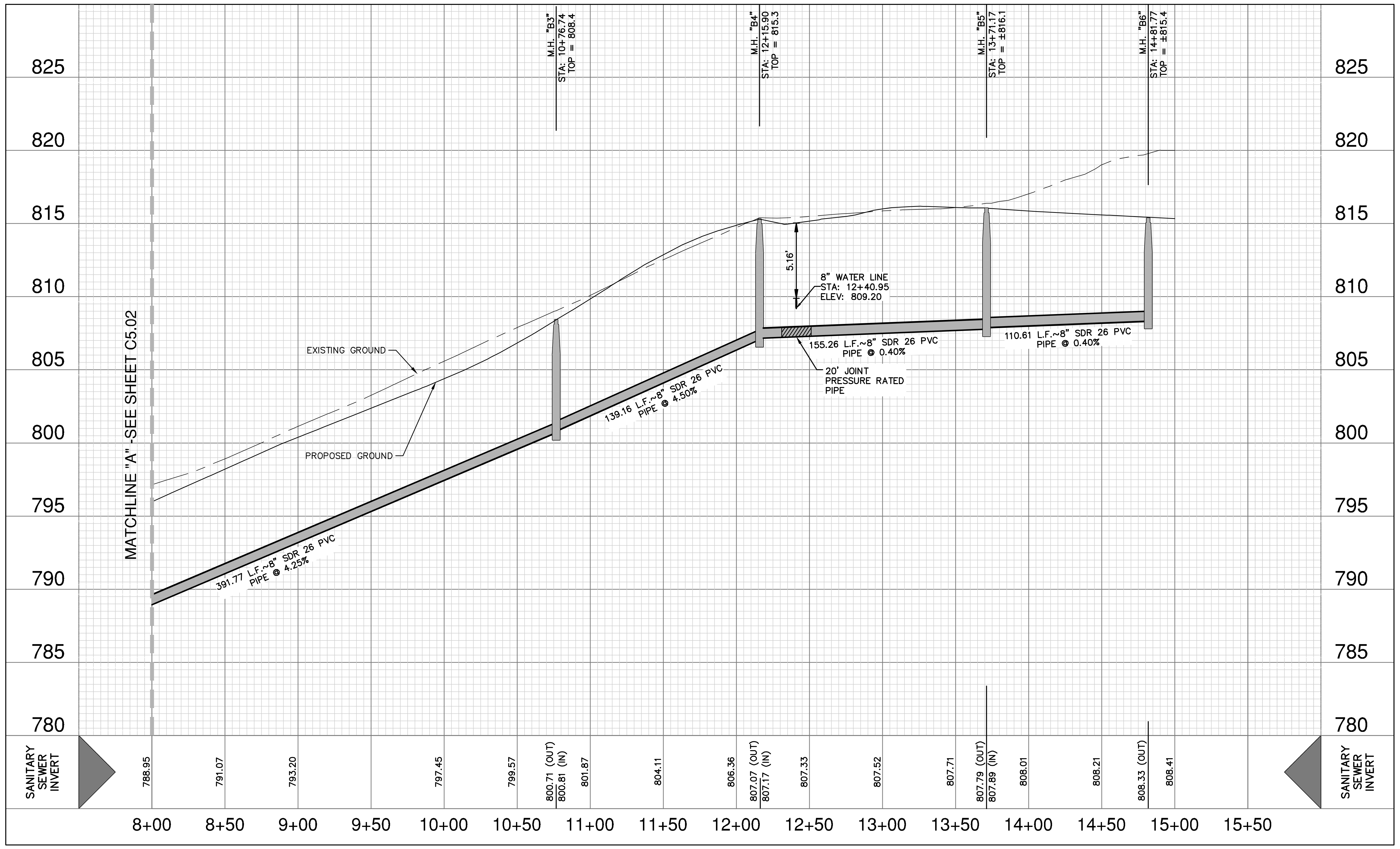
825
820
815
810
805
800
795
790
785
780
M.H. "B3"
STA: 10+76.74
TOP = 808.4
M.H. "B4"
STA: 12+15.90
TOP = 815.3
M.H. "B5"
STA: 13+71.17
TOP = ±816.1
M.H. "B6"
STA: 14+81.77
TOP = ±815.4
5.16'
8" WATER LINE
STA: 12+40.95
ELEV: 809.20
EXISTING GROUND
PROPOSED GROUND
MATCHLINE "A" -SEE SHEET C5.02
391.77 L.F.~8" SDR 26 PVC
PIPE @ 4.25%
139.16 L.F.~8" SDR 26 PVC
PIPE @ 4.50%
155.26 L.F.~8" SDR 26 PVC
PIPE @ 0.40%
20' JOINT
PRESSURE RATED
PIPE
110.61 L.F.~8" SDR 26 PVC
PIPE @ 0.40%
SANITARY SEWER INVERT
788.95
791.07
793.20
797.45
799.57
800.71 (OUT)
800.81 (IN)
801.87
804.11
806.36
807.07 (OUT)
807.17 (IN)
807.33
807.52
807.71
807.79 (OUT)
807.89 (IN)
808.01
808.21
808.33 (OUT)
808.41
SANITARY SEWER INVERT
8+00
8+50
9+00
9+50
10+00
10+50
11+00
11+50
12+00
12+50
13+00
13+50
14+00
14+50
15+00
15+50

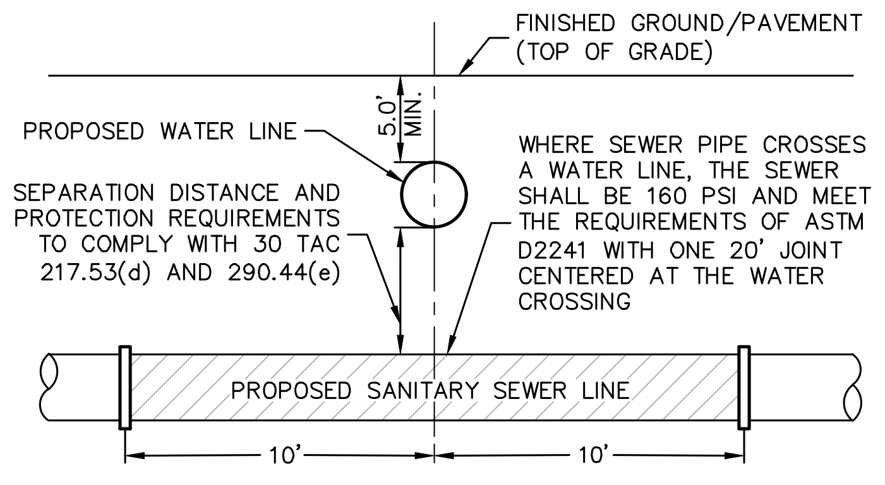
FINISHED GROUND/PAVEMENT
(TOP OF GRADE)
PROPOSED WATER LINE
5.0' MIN.
SEPARATION DISTANCE AND PROTECTION REQUIREMENTS TO COMPLY WITH 30 TAC 217.53(d) AND 290.44(e)
WHERE SEWER PIPE CROSSES A WATER LINE, THE SEWER SHALL BE 160 PSI AND MEET THE REQUIREMENTS OF ASTM D2241 WITH ONE 20' JOINT CENTERED AT THE WATER CROSSING
PROPOSED SANITARY SEWER LINE
10'
10'

TYPICAL SANITARY
SEWER/WATER CROSSING DETAIL

NOT–TO–SCALE

CAUTION!!

CONTRACTOR SHALL BE REQUIRED TO LOCATE ALL PUBLIC OR PRIVATE UTILITIES INCLUDING BUT NOT LIMITING TO: WATER, SEWER, TELEPHONE AND FIBER OPTIC LINES, SITE LIGHTING ELECTRIC, SECONDARY ELECTRIC, PRIMARY ELECTRICAL DUCTBANKS, LANDSCAPE IRRIGATION FACILITIES, AND GAS LINES. ANY UTILITY CONFLICTS THAT ARISE SHOULD BE COMMUNICATED TO THE ENGINEER IMMEDIATELY AND PRIOR TO CONSTRUCTION. THE CONTRACTOR SHALL CONTACT 1–800–DIG–TESS A MINIMUM OF 48 HOURS PRIOR TO THE START OF CONSTRUCTION. ANY DAMAGE TO EXISTING UTILITIES SHALL BE THE SOLE RESPONSIBILITY OF THE CONTRACTOR AND THE REPAIR SHALL BE AT CONTRACTOR'S SOLE EXPENSE WHETHER THE UTILITY IS SHOWN ON THESE PLANS OR NOT.

TRENCH EXCAVATION SAFETY PROTECTION:

CONTRACTOR AND/ OR CONTRACTOR'S INDEPENDENTLY RETAINED EMPLOYEE OR STRUCTURAL DESIGN/ GEOTECHNICAL/ SAFETY/EQUIPMENT CONSULTANT, IF ANY, SHALL REVIEW THESE PLANS AND ANY AVAILABLE GEOTECHNICAL INFORMATION AND THE ANTICIPATED INSTALLATION SITES WITHIN THE PROJECT WORK AREA IN ORDER TO IMPLEMENT CONTRACTOR'S TRENCH EXCAVATION SAFETY PROTECTION SYSTEMS, PROGRAMS AND /OR PROCEDURES FOR THE PROJECT DESCRIBED IN THE CONTRACT DOCUMENTS. THE CONTRACTOR'S IMPLEMENTATION OF THESE SYSTEMS, PROGRAMS AND/OR PROCEDURES SHALL PROVIDE FOR ADEQUATE TRENCH EXCAVATION SAFETY PROTECTION THAT COMPLY WITH AS A MINIMUM, OSHA STANDARDS FOR TRENCH EXCAVATIONS. SPECIFICALLY, CONTRACTOR AND/OR CONTRACTOR'S INDEPENDENTLY RETAINED EMPLOYEE OR SAFETY CONSULTANT SHALL IMPLEMENT A TRENCH SAFETY PROGRAM IN ACCORDANCE WITH OSHA STANDARDS GOVERNING THE PRESENCE AND ACTIVITIES OF INDIVIDUALS WORKING IN AND AROUND TRENCH EXCAVATION.

SEWER (DOS RIOS WRC)

DEVELOPER'S NAME: CONTINENTAL HOMES OF TEXAS, L.P.
ADDRESS: 5419 N LOOP 1604 E
CITY: SAN ANTONIO STATE: TEXAS ZIP: 78218
PHONE# (210) 496–2668 FAX#
SAWS BLOCK MAP# 66558 TOTAL EDU'S 92 TOTAL ACREAGE 18.171
TOTAL LINEAR FOOTAGE OF PIPE: 8" – 3,202 LF PLAT NO. 24–11800312
NUMBER OF LOTS 92 SAWS JOB NO. 24–1594

NO.	REVISION	DATE

CALEB M. CHANCE
98401
1/23/25

PAPE-DAWSON ENGINEERS
2000 NW LOOP 410 I SAN ANTONIO, TX 78213 I 210.375.9000
TEXAS ENGINEERING FIRM #470 I TEXAS SURVEYING FIRM #10028800

STONEHILL UNITS 2B & 6A
SAN ANTONIO, TEXAS

SANITARY SEWER LINE B PLAN & PROFILE
STA 1+00.00 TO 8+00.00

PLAT NO. 24-11800312
JOB NO. 12456–13
DATE JULY 2024
DESIGNER RA
CHECKED BL DRAWN XX
SHEET C5.03

Date: Jan 22, 2025, 1:30pm User ID: ralvarez
File: P:\124\56\13\Design\Civil\SSB-1245613.dwg

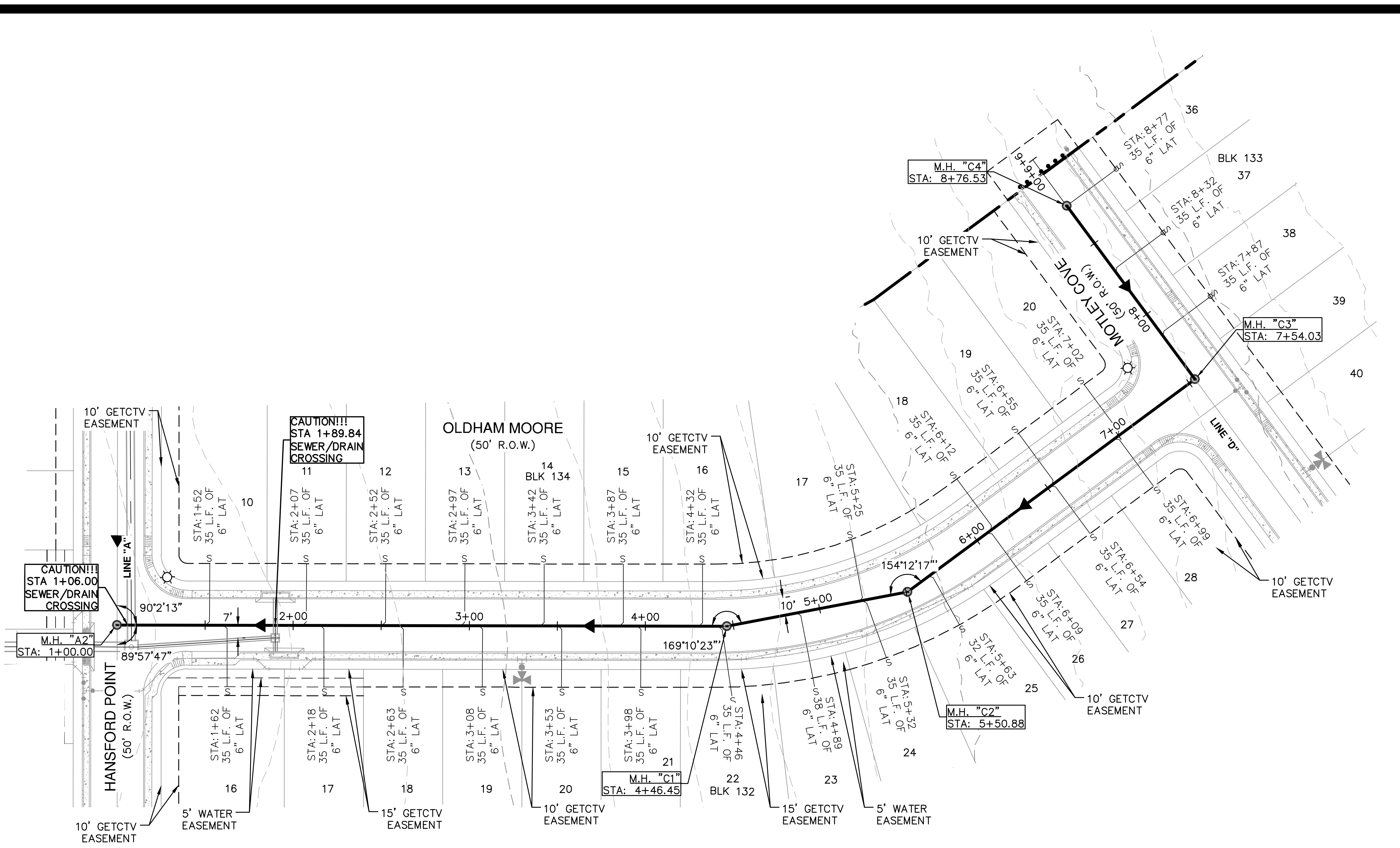
M.H. "C4"
STA: 8+76.53
9+00
8+00
MOTLEY COVE
(50' R.O.W.)
10' GETCTV EASEMENT
BLK 133
36
37
38
39
40
STA:8+77 35 L.F. OF 6" LAT
STA:8+32 35 L.F. OF 6" LAT
STA:7+87 35 L.F. OF 6" LAT
M.H. "C3"
STA: 7+54.03
LINE "D"
7+00
6+00
20
19
18
17
STA:7+02 35 L.F. OF 6" LAT
STA:6+55 35 L.F. OF 6" LAT
STA:6+12 35 L.F. OF 6" LAT
STA:5+25 35 L.F. OF 6" LAT
STA:6+99 35 L.F. OF 6" LAT
STA:6+54 35 L.F. OF 6" LAT
STA:6+09 35 L.F. OF 6" LAT
STA:5+63 32 L.F. OF 6" LAT
STA:5+32 35 L.F. OF 6" LAT
STA:4+89 38 L.F. OF 6" LAT
STA:4+46 35 L.F. OF 6" LAT
28
27
26
25
24
23
22
BLK 132
21
10' GETCTV EASEMENT
154°12'17"
5+00
M.H. "C2"
STA: 5+50.88
15' GETCTV EASEMENT
5' WATER EASEMENT
OLDHAM MOORE
(50' R.O.W.)
14
BLK 134
10
11
12
13
15
16
CAUTION!!!
STA 1+89.84
SEWER/DRAIN
CROSSING
STA:1+52 35 L.F. OF 6" LAT
STA:2+07 35 L.F. OF 6" LAT
STA:2+52 35 L.F. OF 6" LAT
STA:2+97 35 L.F. OF 6" LAT
STA:3+42 35 L.F. OF 6" LAT
STA:3+87 35 L.F. OF 6" LAT
STA:4+32 35 L.F. OF 6" LAT
STA:1+62 35 L.F. OF 6" LAT
STA:2+18 35 L.F. OF 6" LAT
STA:2+63 35 L.F. OF 6" LAT
STA:3+08 35 L.F. OF 6" LAT
STA:3+53 35 L.F. OF 6" LAT
STA:3+98 35 L.F. OF 6" LAT
169°10'23"
4+00
3+00
2+00
7'
M.H. "C1"
STA: 4+46.45
16
17
18
19
20
CAUTION!!!
STA 1+06.00
SEWER/DRAIN
CROSSING
90°2'13"
89°57'47"
M.H. "A2"
STA: 1+00.00
LINE "A"
HANSFORD POINT
(50' R.O.W.)
10' GETCTV EASEMENT
5' WATER EASEMENT
15' GETCTV EASEMENT

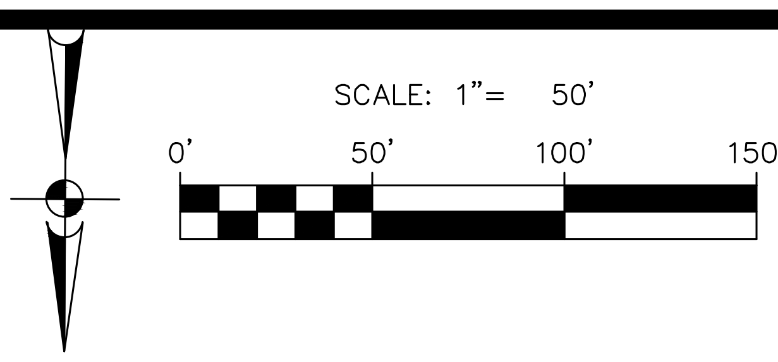
SCALE: 1"= 50'
0'
50'
100'
150'

SEWER LEGEND

PROJECT LIMITS	——— – – ———
EXISTING WATER	– – – W – – –
EXISTING SEWER	– – ▶ – SS – – (SS) – –
PROPOSED SEWER	—▶— SS —(SS)— MANHOLE
PROPOSED WATER	—W— FIRE HYDRANT
PROPOSED SEWER LATERAL	S
FINISHED FLOOR ELEVATION FOR SEWER	FF = XXXX.XX

NO.	REVISION	DATE

STATE OF TEXAS
CALEB M. CHANCE
98401
LICENSED PROFESSIONAL ENGINEER
Caleb M. Chance
1/23/25

PAPE-DAWSON ENGINEERS
2000 NW LOOP 410 I SAN ANTONIO, TX 78213 I 210.375.9000
TEXAS ENGINEERING FIRM #470 I TEXAS SURVEYING FIRM #10028800

STONEHILL UNITS 2B & 6A
SAN ANTONIO, TEXAS

SANITARY SEWER LINE C PLAN & PROFILE
STA 1+00.00 TO END

SANITARY SEWER LINE "C"
STA. 1+00.00 TO END

VERTICAL SCALE: 1" = 5'
HORIZONTAL SCALE: 1" = 50'

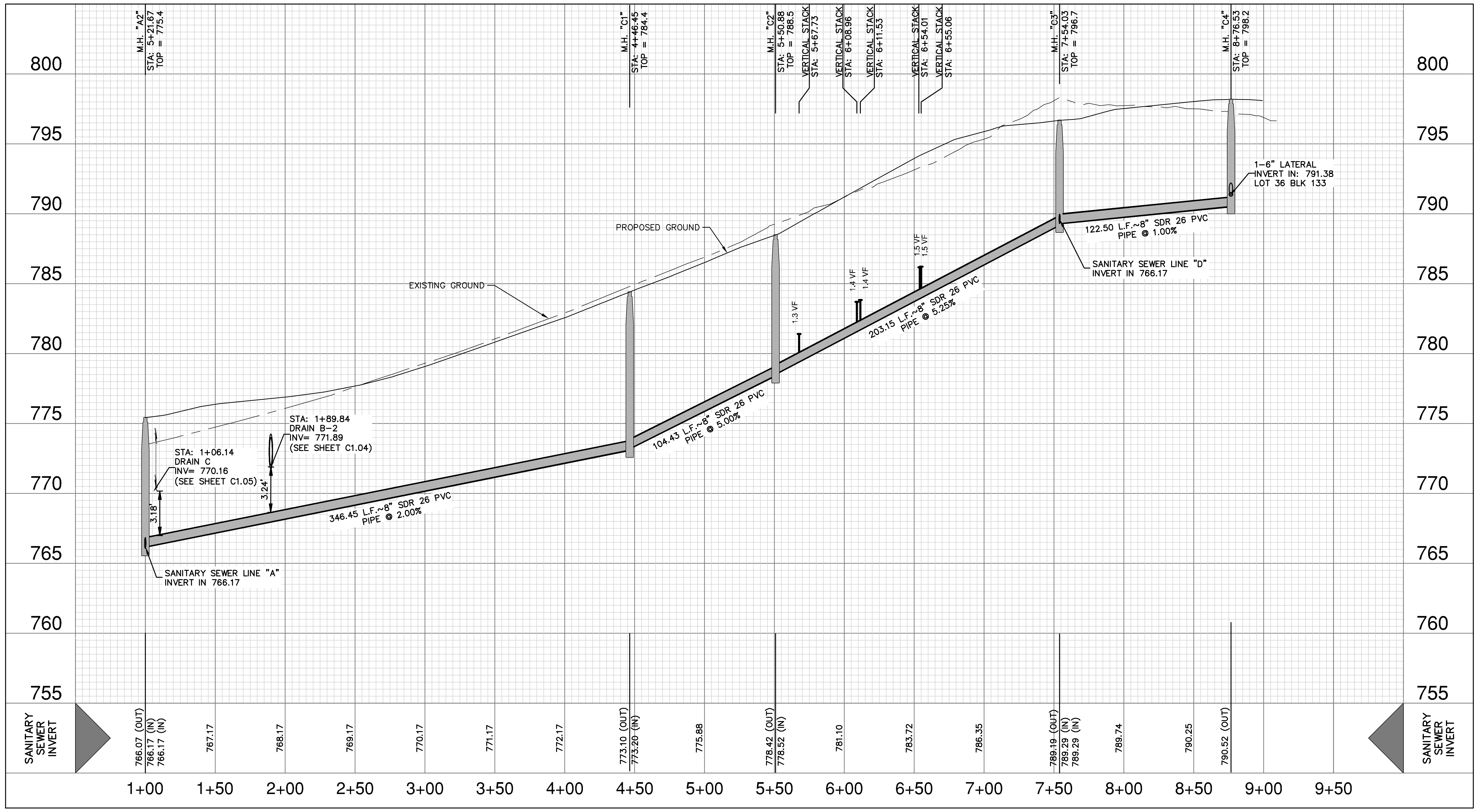
M.H. "A2"
STA: 5+21.67
TOP = 775.4
M.H. "C1"
STA: 4+46.45
TOP = 784.4
M.H. "C2"
STA: 5+50.88
TOP = 788.5
VERTICAL STACK
STA: 5+67.73
VERTICAL STACK
STA: 6+08.96
VERTICAL STACK
STA: 6+11.53
VERTICAL STACK
STA: 6+54.01
VERTICAL STACK
STA: 6+55.06
M.H. "C3"
STA: 7+54.03
TOP = 796.7
M.H. "C4"
STA: 8+76.53
TOP = 798.2
800
795
790
785
780
775
770
765
760
755
1-6" LATERAL
INVERT IN: 791.38
LOT 36 BLK 133
122.50 L.F.~8" SDR 26 PVC PIPE @ 1.00%
SANITARY SEWER LINE "D"
INVERT IN 766.17
PROPOSED GROUND
EXISTING GROUND
1.5 VF
1.5 VF
1.4 VF
1.4 VF
1.3 VF
203.15 L.F.~8" SDR 26 PVC PIPE @ 5.25%
104.43 L.F.~8" SDR 26 PVC PIPE @ 5.00%
STA: 1+89.84
DRAIN B-2
INV= 771.89
(SEE SHEET C1.04)
STA: 1+06.14
DRAIN C
INV= 770.16
(SEE SHEET C1.05)
3.24'
3.18'
346.45 L.F.~8" SDR 26 PVC PIPE @ 2.00%
SANITARY SEWER LINE "A"
INVERT IN 766.17
SANITARY SEWER INVERT
766.07 (OUT)
766.17 (IN)
766.17 (IN)
767.17
768.17
769.17
770.17
771.17
772.17
773.10 (OUT)
773.20 (IN)
775.88
778.42 (OUT)
778.52 (IN)
781.10
783.72
786.35
789.19 (OUT)
789.29 (IN)
789.29 (IN)
789.74
790.25
790.52 (OUT)
1+00
1+50
2+00
2+50
3+00
3+50
4+00
4+50
5+00
5+50
6+00
6+50
7+00
7+50
8+00
8+50
9+00
9+50

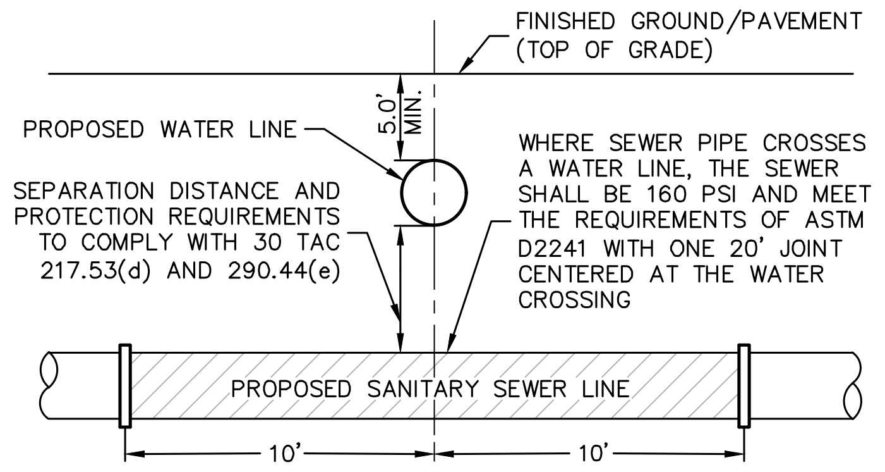
FINISHED GROUND/PAVEMENT
(TOP OF GRADE)
PROPOSED WATER LINE
5.0' MIN.
SEPARATION DISTANCE AND PROTECTION REQUIREMENTS TO COMPLY WITH 30 TAC 217.53(d) AND 290.44(e)
WHERE SEWER PIPE CROSSES A WATER LINE, THE SEWER SHALL BE 160 PSI AND MEET THE REQUIREMENTS OF ASTM D2241 WITH ONE 20' JOINT CENTERED AT THE WATER CROSSING
PROPOSED SANITARY SEWER LINE
10'
10'

TYPICAL SANITARY SEWER/WATER CROSSING DETAIL
NOT-TO-SCALE

CAUTION!!

CONTRACTOR SHALL BE REQUIRED TO LOCATE ALL PUBLIC OR PRIVATE UTILITIES INCLUDING BUT NOT LIMITING TO: WATER, SEWER, TELEPHONE AND FIBER OPTIC LINES, SITE LIGHTING ELECTRIC, SECONDARY ELECTRIC, PRIMARY ELECTRICAL DUCTBANKS, LANDSCAPE IRRIGATION FACILITIES, AND GAS LINES. ANY UTILITY CONFLICTS THAT ARISE SHOULD BE COMMUNICATED TO THE ENGINEER IMMEDIATELY AND PRIOR TO CONSTRUCTION. THE CONTRACTOR SHALL CONTACT 1-800-DIG-TESS A MINIMUM OF 48 HOURS PRIOR TO THE START OF CONSTRUCTION. ANY DAMAGE TO EXISTING UTILITIES SHALL BE THE SOLE RESPONSIBILITY OF THE CONTRACTOR AND THE REPAIR SHALL BE AT CONTRACTOR'S SOLE EXPENSE WHETHER THE UTILITY IS SHOWN ON THESE PLANS OR NOT.

TRENCH EXCAVATION SAFETY PROTECTION:

CONTRACTOR AND/ OR CONTRACTOR'S INDEPENDENTLY RETAINED EMPLOYEE OR STRUCTURAL DESIGN/ GEOTECHNICAL/ SAFETY/EQUIPMENT CONSULTANT, IF ANY, SHALL REVIEW THESE PLANS AND ANY AVAILABLE GEOTECHNICAL INFORMATION AND THE ANTICIPATED INSTALLATION SITES WITHIN THE PROJECT WORK AREA IN ORDER TO IMPLEMENT CONTRACTOR'S TRENCH EXCAVATION SAFETY PROTECTION SYSTEMS, PROGRAMS AND /OR PROCEDURES FOR THE PROJECT DESCRIBED IN THE CONTRACT DOCUMENTS. THE CONTRACTOR'S IMPLEMENTATION OF THESE SYSTEMS, PROGRAMS AND/OR PROCEDURES SHALL PROVIDE FOR ADEQUATE TRENCH EXCAVATION SAFETY PROTECTION THAT COMPLY WITH AS A MINIMUM, OSHA STANDARDS FOR TRENCH EXCAVATIONS. SPECIFICALLY, CONTRACTOR AND/OR CONTRACTOR'S INDEPENDENTLY RETAINED EMPLOYEE OR SAFETY CONSULTANT SHALL IMPLEMENT A TRENCH SAFETY PROGRAM IN ACCORDANCE WITH OSHA STANDARDS GOVERNING THE PRESENCE AND ACTIVITIES OF INDIVIDUALS WORKING IN AND AROUND TRENCH EXCAVATION.

SEWER (DOS RIOS WRC)

DEVELOPER'S NAME: CONTINENTAL HOMES OF TEXAS, L.P.
ADDRESS: 5419 N LOOP 1604 E
CITY: SAN ANTONIO STATE: TEXAS ZIP: 78218
PHONE# (210) 496-2668 FAX#
SAWS BLOCK MAP# 66558 TOTAL EDU'S 92 TOTAL ACREAGE 18.171
TOTAL LINEAR FOOTAGE OF PIPE: 8" – 3,202 LF PLAT NO. 24-11800312
NUMBER OF LOTS 92 SAWS JOB NO. 24-1594

PLAT NO. 24-11800312
JOB NO. 12456-13
DATE JULY 2024
DESIGNER RA
CHECKED BL DRAWN EG
SHEET C5.04

Date: Jan 22, 2025, 1:30pm User ID: ralvarez
File: P:\124\56\13\Design\Civil\SSC-1245613.dwg

SCALE: 1"= 50'
0'
50'
100'
150'

SEWER LEGEND

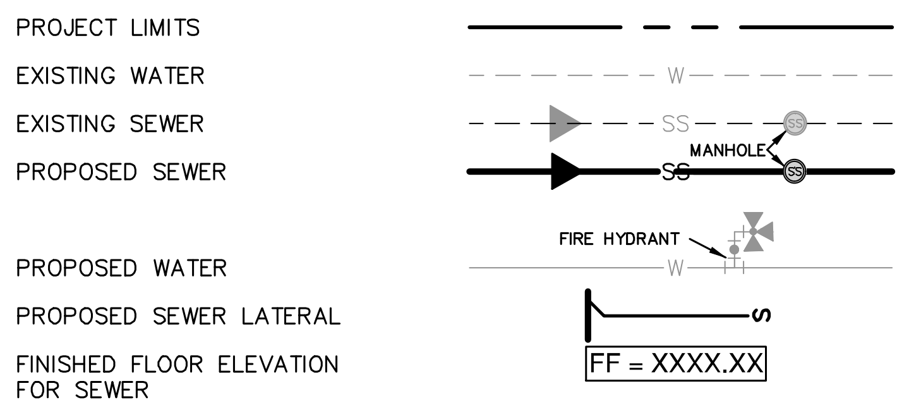
PROJECT LIMITS
EXISTING WATER
EXISTING SEWER
PROPOSED SEWER
MANHOLE
FIRE HYDRANT
PROPOSED WATER
PROPOSED SEWER LATERAL
FINISHED FLOOR ELEVATION FOR SEWER
W
SS
S
FF = XXXX.XX

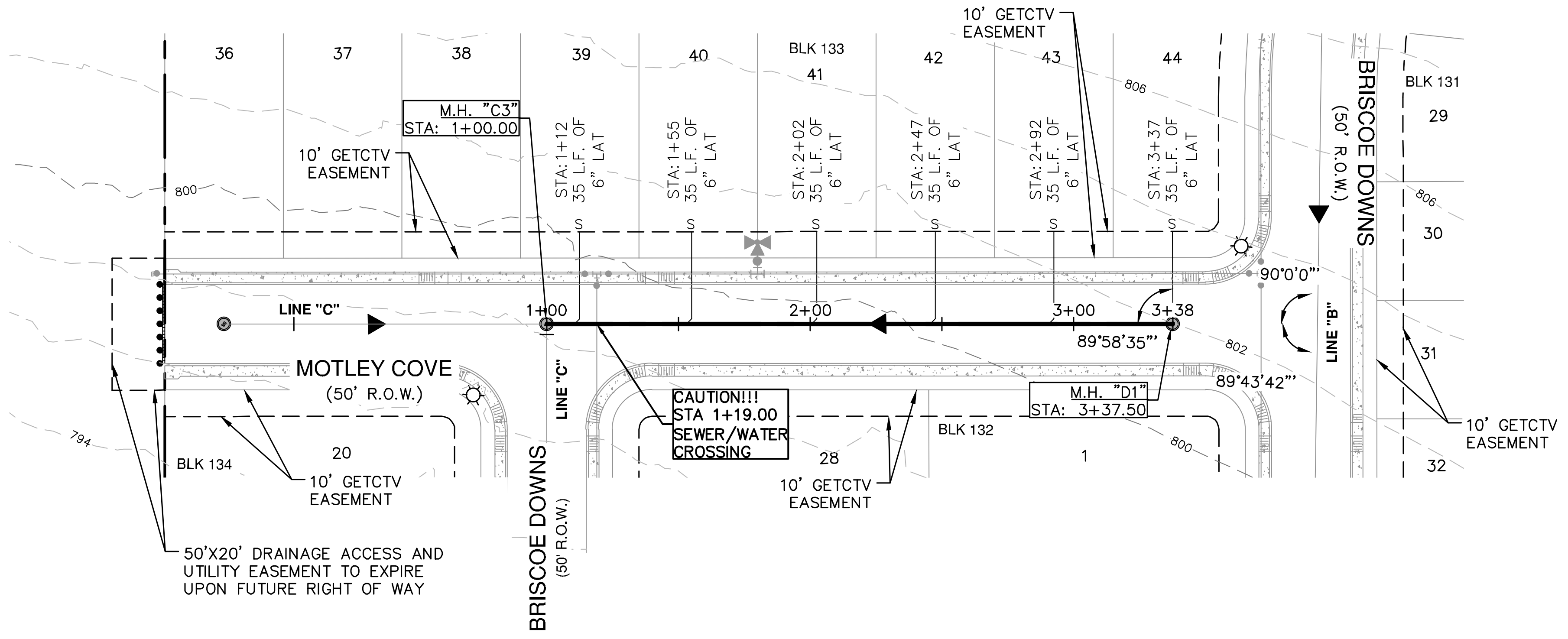
36
37
38
39
40
BLK 133
41
42
43
44
BLK 131
29
30
31
32
M.H. "C3"
STA: 1+00.00
10' GETCTV EASEMENT
STA:1+12 35 L.F. OF 6" LAT
STA:1+55 35 L.F. OF 6" LAT
STA:2+02 35 L.F. OF 6" LAT
STA:2+47 35 L.F. OF 6" LAT
STA:2+92 35 L.F. OF 6" LAT
STA:3+37 35 L.F. OF 6" LAT
S
800
806
802
794
LINE "C"
1+00
2+00
3+00
3+38
89°58'35"
90°0'0"
89°43'42"
MOTLEY COVE
(50' R.O.W.)
CAUTION!!! STA 1+19.00 SEWER/WATER CROSSING
M.H. "D1"
STA: 3+37.50
BRISCOE DOWNS
(50' R.O.W.)
LINE "B"
BLK 134
20
28
BLK 132
1
10' GETCTV EASEMENT
50'X20' DRAINAGE ACCESS AND UTILITY EASEMENT TO EXPIRE UPON FUTURE RIGHT OF WAY

SANITARY SEWER LINE "D"
STA. 1+00.00 TO END

VERTICAL SCALE: 1" = 5'
HORIZONTAL SCALE: 1" = 50'

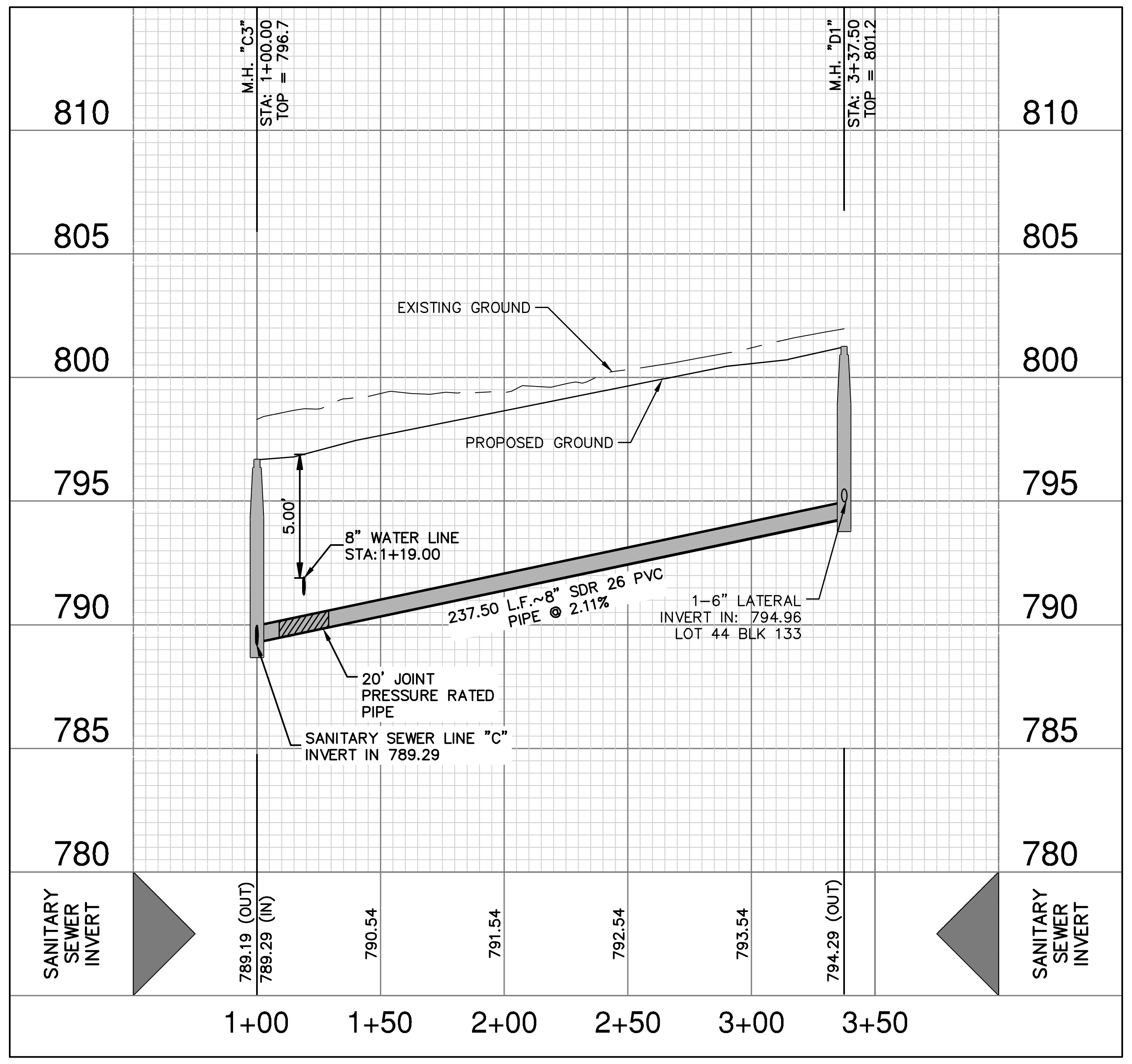
M.H. "C3"
STA: 1+00.00
TOP = 796.7
M.H. "D1"
STA: 3+37.50
TOP = 801.2
810
805
800
795
790
785
780
EXISTING GROUND
PROPOSED GROUND
5.00'
8" WATER LINE
STA:1+19.00
237.50 L.F.~8" SDR 26 PVC PIPE @ 2.11%
1–6" LATERAL
INVERT IN: 794.96
LOT 44 BLK 133
20' JOINT PRESSURE RATED PIPE
SANITARY SEWER LINE "C"
INVERT IN 789.29
SANITARY SEWER INVERT
789.19 (OUT)
789.29 (IN)
790.54
791.54
792.54
793.54
794.29 (OUT)
1+00
1+50
2+00
2+50
3+00
3+50

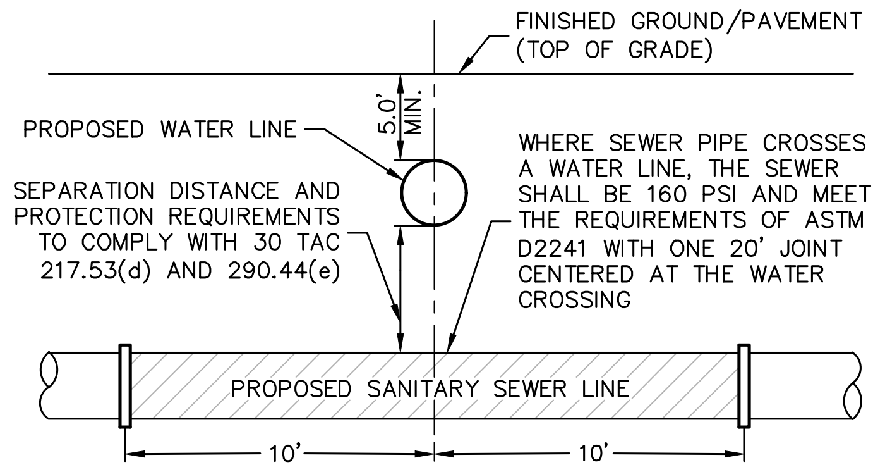
FINISHED GROUND/PAVEMENT (TOP OF GRADE)
5.0' MIN.
PROPOSED WATER LINE
SEPARATION DISTANCE AND PROTECTION REQUIREMENTS TO COMPLY WITH 30 TAC 217.53(d) AND 290.44(e)
WHERE SEWER PIPE CROSSES A WATER LINE, THE SEWER SHALL BE 160 PSI AND MEET THE REQUIREMENTS OF ASTM D2241 WITH ONE 20' JOINT CENTERED AT THE WATER CROSSING
PROPOSED SANITARY SEWER LINE
10'
10'

TYPICAL SANITARY SEWER/WATER CROSSING DETAIL

NOT-TO-SCALE

CAUTION!!

CONTRACTOR SHALL BE REQUIRED TO LOCATE ALL PUBLIC OR PRIVATE UTILITIES INCLUDING BUT NOT LIMITING TO: WATER, SEWER, TELEPHONE AND FIBER OPTIC LINES, SITE LIGHTING ELECTRIC, SECONDARY ELECTRIC, PRIMARY ELECTRICAL DUCTBANKS, LANDSCAPE IRRIGATION FACILITIES, AND GAS LINES. ANY UTILITY CONFLICTS THAT ARISE SHOULD BE COMMUNICATED TO THE ENGINEER IMMEDIATELY AND PRIOR TO CONSTRUCTION. THE CONTRACTOR SHALL CONTACT 1–800–DIG–TESS A MINIMUM OF 48 HOURS PRIOR TO THE START OF CONSTRUCTION. ANY DAMAGE TO EXISTING UTILITIES SHALL BE THE SOLE RESPONSIBILITY OF THE CONTRACTOR AND THE REPAIR SHALL BE AT CONTRACTOR'S SOLE EXPENSE WHETHER THE UTILITY IS SHOWN ON THESE PLANS OR NOT.

TRENCH EXCAVATION SAFETY PROTECTION:

CONTRACTOR AND/ OR CONTRACTOR'S INDEPENDENTLY RETAINED EMPLOYEE OR STRUCTURAL DESIGN/ GEOTECHNICAL/ SAFETY/EQUIPMENT CONSULTANT, IF ANY, SHALL REVIEW THESE PLANS AND ANY AVAILABLE GEOTECHNICAL INFORMATION AND THE ANTICIPATED INSTALLATION SITES WITHIN THE PROJECT WORK AREA IN ORDER TO IMPLEMENT CONTRACTOR'S TRENCH EXCAVATION SAFETY PROTECTION SYSTEMS, PROGRAMS AND /OR PROCEDURES FOR THE PROJECT DESCRIBED IN THE CONTRACT DOCUMENTS. THE CONTRACTOR'S IMPLEMENTATION OF THESE SYSTEMS, PROGRAMS AND/OR PROCEDURES SHALL PROVIDE FOR ADEQUATE TRENCH EXCAVATION SAFETY PROTECTION THAT COMPLY WITH AS A MINIMUM, OSHA STANDARDS FOR TRENCH EXCAVATIONS. SPECIFICALLY, CONTRACTOR AND/OR CONTRACTOR'S INDEPENDENTLY RETAINED EMPLOYEE OR SAFETY CONSULTANT SHALL IMPLEMENT A TRENCH SAFETY PROGRAM IN ACCORDANCE WITH OSHA STANDARDS GOVERNING THE PRESENCE AND ACTIVITIES OF INDIVIDUALS WORKING IN AND AROUND TRENCH EXCAVATION.

SEWER (DOS RIOS WRC)

DEVELOPER'S NAME: CONTINENTAL HOMES OF TEXAS, L.P.
ADDRESS: 5419 N LOOP 1604 E
CITY: SAN ANTONIO STATE: TEXAS ZIP: 78218
PHONE# (210) 496–2668 FAX#
SAWS BLOCK MAP# 66558 TOTAL EDU'S 92 TOTAL ACREAGE 18.171
TOTAL LINEAR FOOTAGE OF PIPE: 8" – 3,202 LF PLAT NO. 24–11800312
NUMBER OF LOTS 92 SAWS JOB NO. 24–1594

NO.	REVISION	DATE

CALEB M. CHANCE
98401
1/23/25

PAPE-DAWSON ENGINEERS
2000 NW LOOP 410 I SAN ANTONIO, TX 78213 I 210.375.9000
TEXAS ENGINEERING FIRM #470 I TEXAS SURVEYING FIRM #10028800

STONEHILL UNITS 2B & 6A
SAN ANTONIO, TEXAS

SANITARY SEWER LINE D PLAN & PROFILE
STA. 1+00.00 TO END

PLAT NO. 24-11800312
JOB NO. 12456–13
DATE JULY 2024
DESIGNER RA
CHECKED BL DRAWN EG
SHEET C5.05

Date: Jan 22, 2025, 1:31pm User ID: ralvarez
File: P:\124\56\13\Design\Civil\SSD-1245613.dwg

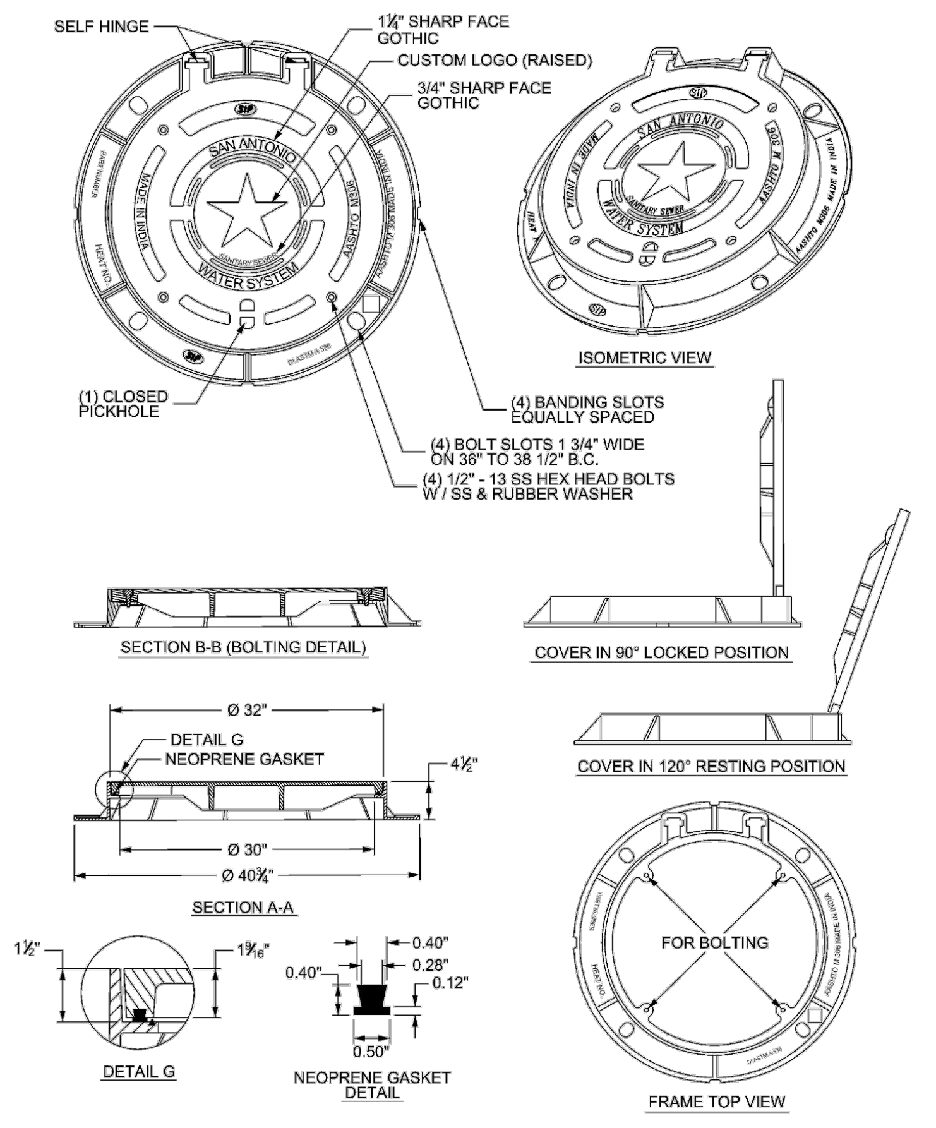
SELF HINGE
1¼" SHARP FACE GOTHIC
CUSTOM LOGO (RAISED)
3/4" SHARP FACE GOTHIC
(1) CLOSED PICKHOLE
(4) BANDING SLOTS EQUALLY SPACED
(4) BOLT SLOTS 1 3/4" WIDE ON 36" TO 38 1/2" B.C.
(4) 1/2" - 13 SS HEX HEAD BOLTS W / SS & RUBBER WASHER
ISOMETRIC VIEW
SECTION B-B (BOLTING DETAIL)
COVER IN 90° LOCKED POSITION
Ø 32"
DETAIL G
NEOPRENE GASKET
4½"
Ø 30"
Ø 40¾"
SECTION A-A
COVER IN 120° RESTING POSITION
1½"
1⁹⁄₁₆"
DETAIL G
0.40"
0.28"
0.12"
0.50"
NEOPRENE GASKET DETAIL
FOR BOLTING
FRAME TOP VIEW

SIP Industries

PROPERTY OF
SAN ANTONIO WATER SYSTEM
SAN ANTONIO, TEXAS

30" MANHOLE RING AND COVER DETAIL

APPROVED	REVISED
	AUG 2019

DD 852-07 SHEET 1 OF 5

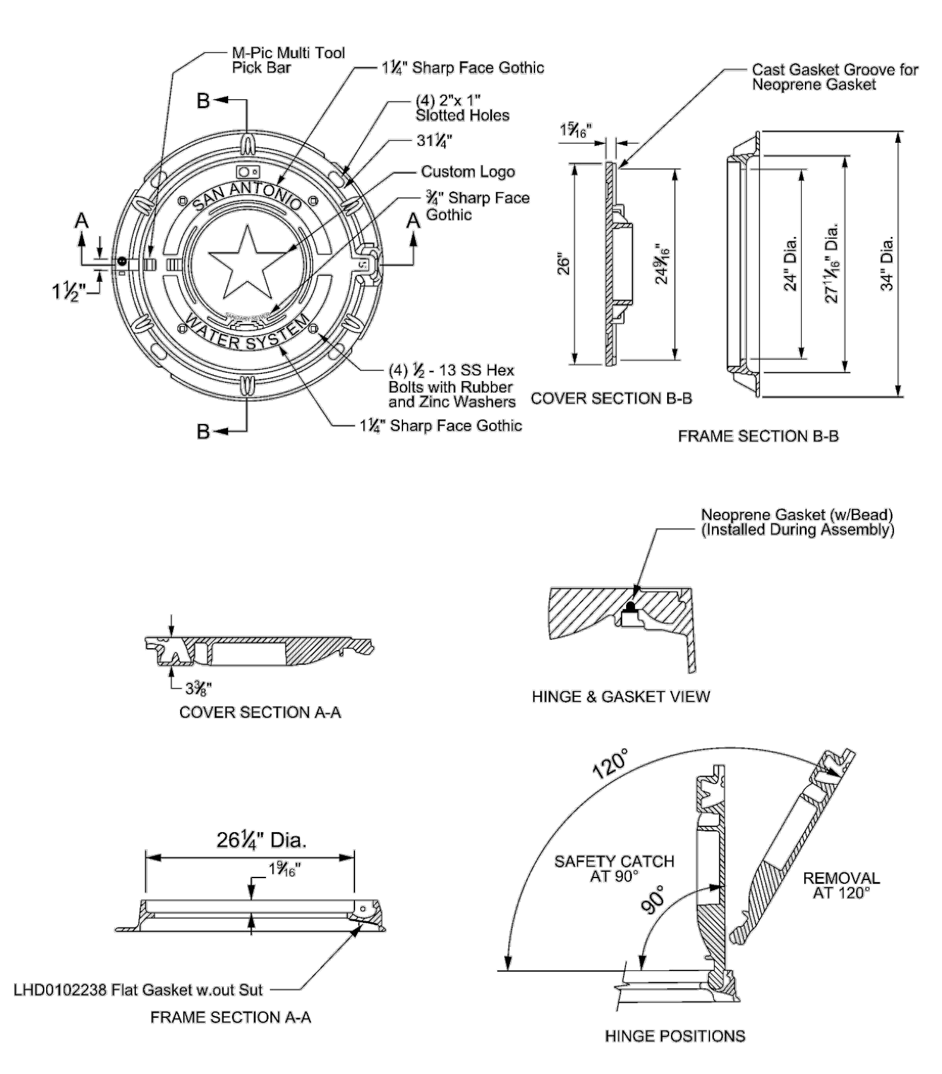
M-Pic Multi Tool Pick Bar
1¼" Sharp Face Gothic
(4) 2"x 1" Slotted Holes
31¼"
Custom Logo
¾" Sharp Face Gothic
1½"
(4) ½ - 13 SS Hex Bolts with Rubber and Zinc Washers
1¼" Sharp Face Gothic
Cast Gasket Groove for Neoprene Gasket
1⁵⁄₁₆"
26"
24⁹⁄₁₆"
24" Dia.
27¹⁄₁₆" Dia.
34" Dia.
COVER SECTION B-B
FRAME SECTION B-B
Neoprene Gasket (w/Bead) (Installed During Assembly)
3⅜"
COVER SECTION A-A
HINGE & GASKET VIEW
26¼" Dia.
1⁵⁄₁₆"
LHD0102238 Flat Gasket w.out Sut
FRAME SECTION A-A
120°
SAFETY CATCH AT 90°
90°
REMOVAL AT 120°
HINGE POSITIONS

ERGO Assembly

PROPERTY OF
SAN ANTONIO WATER SYSTEM
SAN ANTONIO, TEXAS

MANHOLE RING AND COVER DETAIL

APPROVED	REVISED
MARCH 2008	AUG 2019

DD 852-07 SHEET 2 OF 5

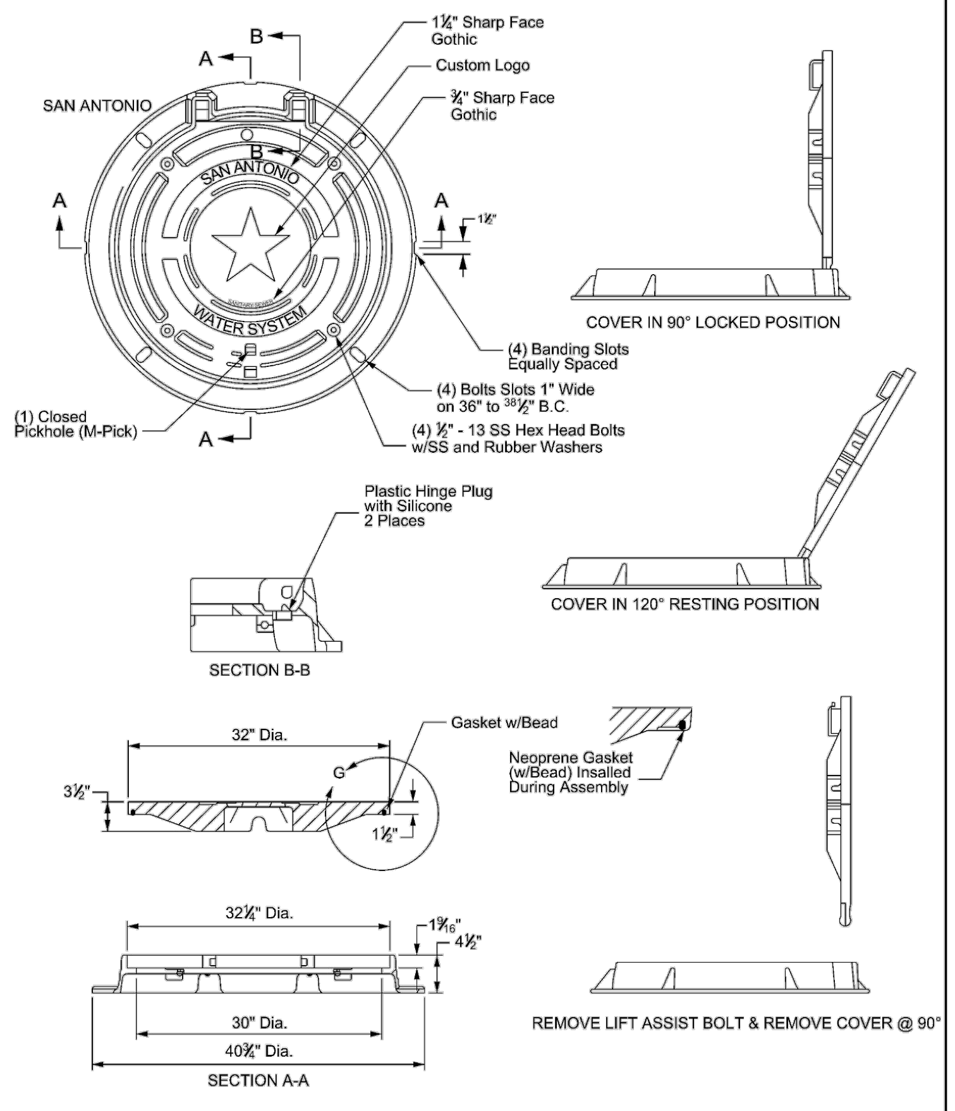
1¼" Sharp Face Gothic
Custom Logo
¾" Sharp Face Gothic
SAN ANTONIO
(1) Closed Pickhole (M-Pick)
(4) Banding Slots Equally Spaced
(4) Bolts Slots 1" Wide on 36" to 38½" B.C.
(4) ½" - 13 SS Hex Head Bolts w/SS and Rubber Washers
COVER IN 90° LOCKED POSITION
Plastic Hinge Plug with Silicone 2 Places
SECTION B-B
COVER IN 120° RESTING POSITION
32" Dia.
Gasket w/Bead
Neoprene Gasket (w/Bead) Insalled During Assembly
3½"
1½"
32¼" Dia.
1⁹⁄₁₆"
4½"
30" Dia.
40¾" Dia.
SECTION A-A
REMOVE LIFT ASSIST BOLT & REMOVE COVER @ 90°

ERGO XL Assembly

PROPERTY OF
SAN ANTONIO WATER SYSTEM
SAN ANTONIO, TEXAS

MANHOLE RING AND COVER DETAIL

APPROVED	REVISED
MARCH 2008	AUG 2019

DD 852-07 SHEET 3 OF 5

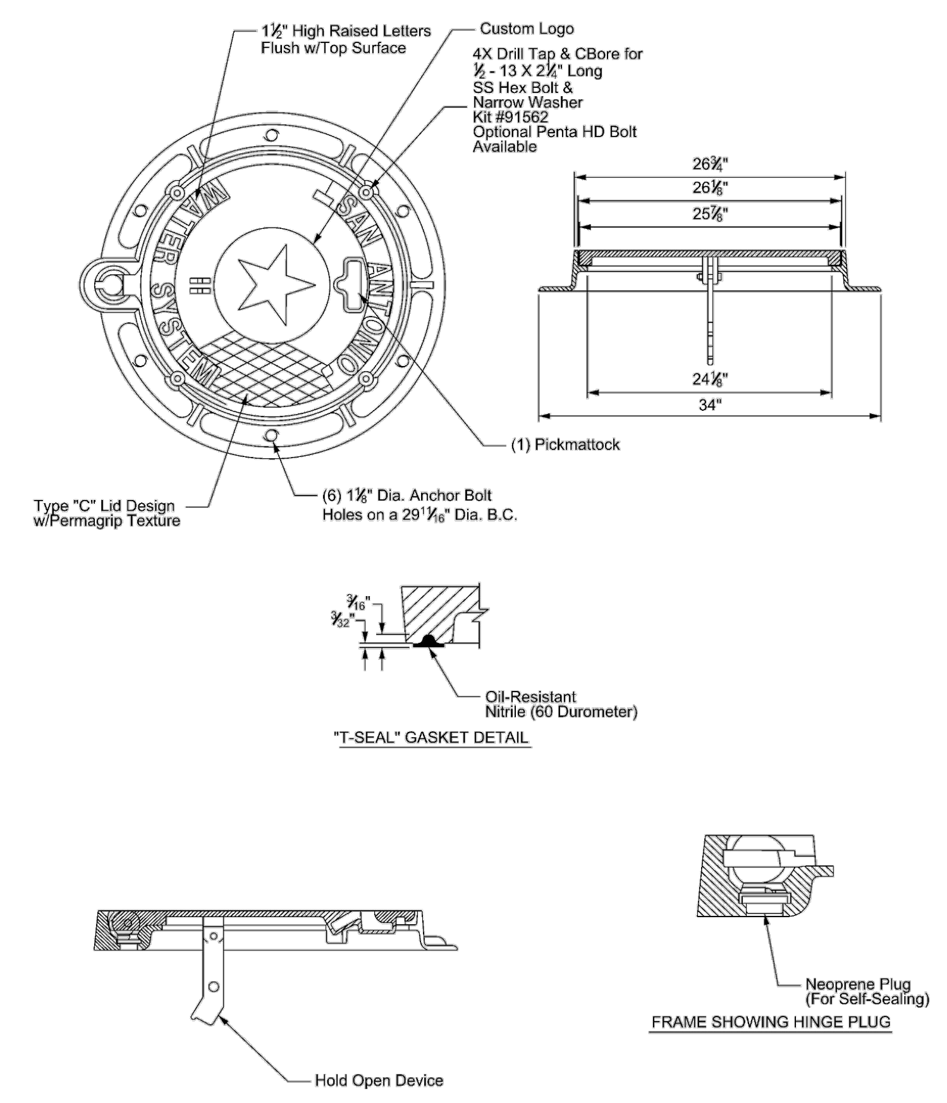
1½" High Raised Letters Flush w/Top Surface
Custom Logo
4X Drill Tap & CBore for ½ - 13 X 2¼" Long SS Hex Bolt & Narrow Washer Kit #91562 Optional Penta HD Bolt Available
26¾"
26⅛"
25⅞"
24⅛"
34"
(1) Pickmattock
Type "C" Lid Design w/Permagrip Texture
(6) 1⅛" Dia. Anchor Bolt Holes on a 29¹¹⁄₁₆" Dia. B.C.
³⁄₁₆"
³⁄₃₂"
Oil-Resistant Nitrile (60 Durometer)
"T-SEAL" GASKET DETAIL
Neoprene Plug (For Self-Sealing)
FRAME SHOWING HINGE PLUG
Hold Open Device

NEENAH FOUNDRY

PROPERTY OF
SAN ANTONIO WATER SYSTEM
SAN ANTONIO, TEXAS

MANHOLE RING AND COVER DETAIL

APPROVED	REVISED
MARCH 2008	AUG 2019

DD 852-07 SHEET 4 OF 5

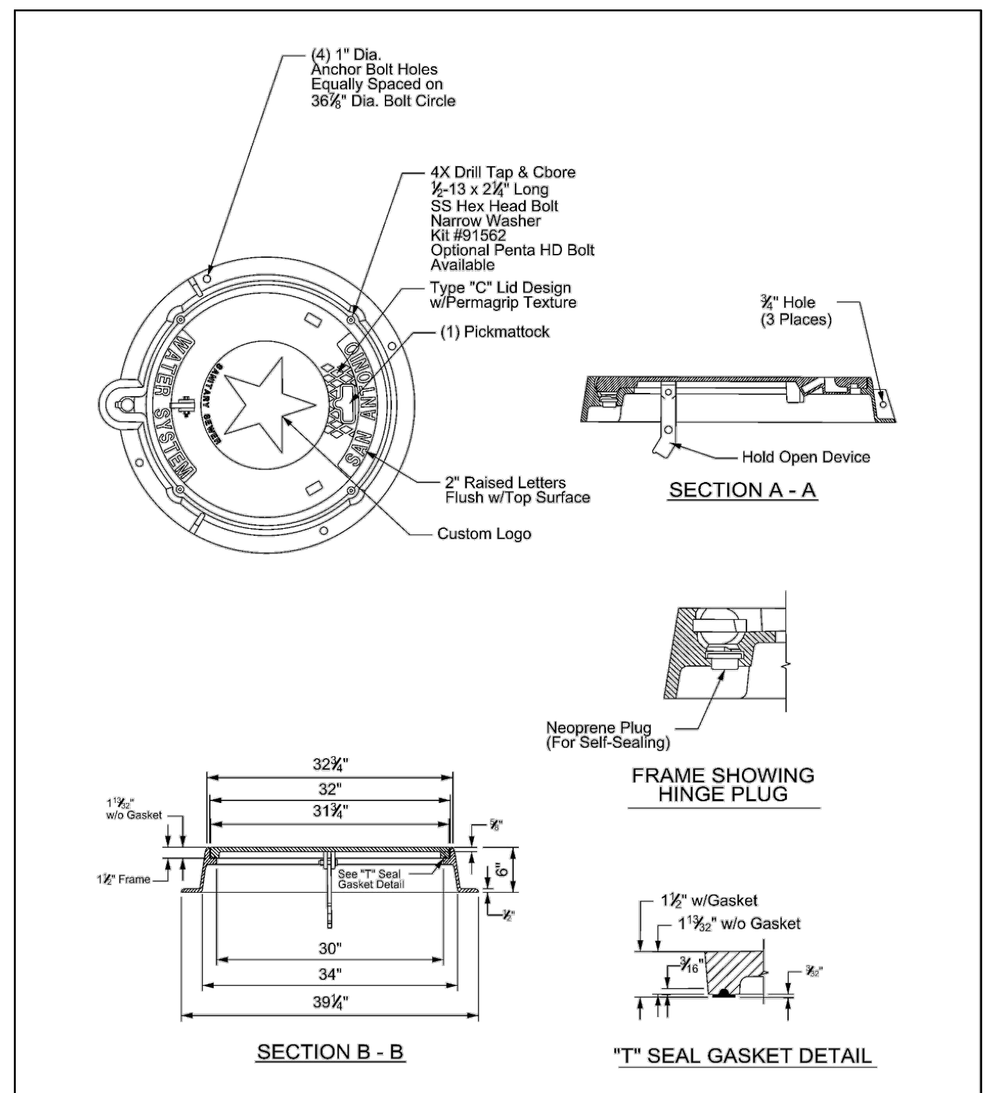
(4) 1" Dia. Anchor Bolt Holes Equally Spaced on 36⅞" Dia. Bolt Circle
4X Drill Tap & Cbore ½-13 x 2¼" Long SS Hex Head Bolt Narrow Washer Kit #91562 Optional Penta HD Bolt Available
Type "C" Lid Design w/Permagrip Texture
(1) Pickmattock
2" Raised Letters Flush w/Top Surface
Custom Logo
¾" Hole (3 Places)
Hold Open Device
SECTION A - A
Neoprene Plug (For Self-Sealing)
FRAME SHOWING HINGE PLUG
32¾"
32"
31¾"
1¹³⁄₃₂" w/o Gasket
1½" Frame
See "T" Seal Gasket Detail
30"
34"
39¼"
SECTION B - B
1½" w/Gasket
1¹³⁄₃₂" w/o Gasket
³⁄₁₆"
"T" SEAL GASKET DETAIL

NEENAH FOUNDRY

PROPERTY OF
SAN ANTONIO WATER SYSTEM
SAN ANTONIO, TEXAS

MANHOLE RING AND COVER DETAIL

APPROVED	REVISED
MARCH 2008	AUG 2019

DD 852-07 SHEET 5 OF 5

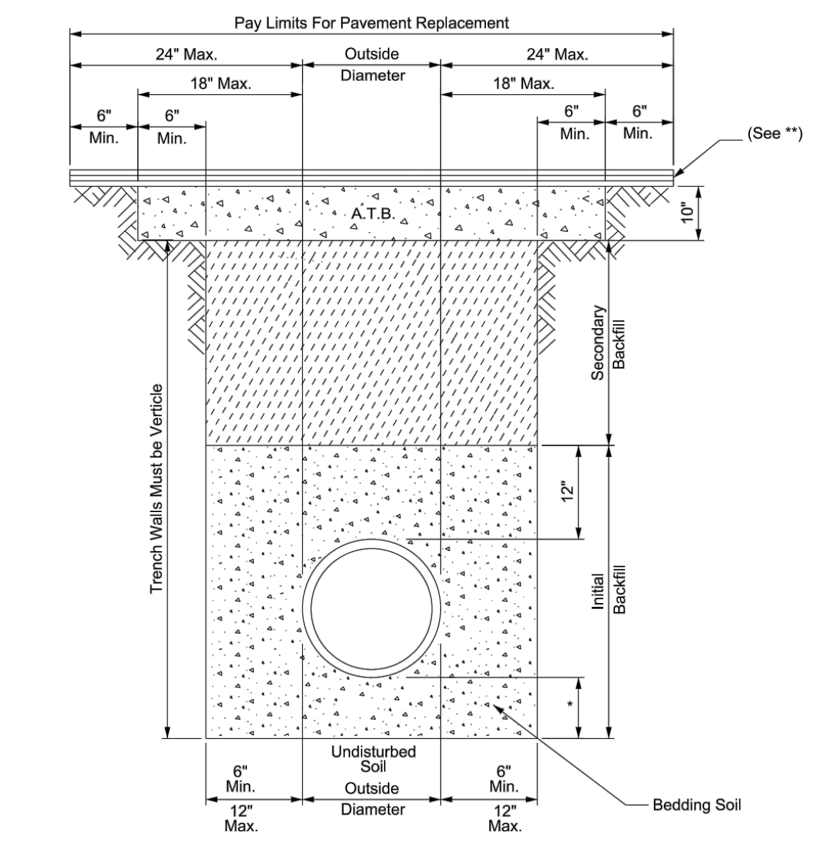
Pay Limits For Pavement Replacement
24" Max.
Outside Diameter
24" Max.
18" Max.
18" Max.
6" Min.
6" Min.
6" Min.
6" Min.
(See **)
A.T.B.
10"
Trench Walls Must be Verticle
Secondary Backfill
12"
Initial Backfill
*
Undisturbed Soil
6" Min.
6" Min.
12" Max.
Outside Diameter
12" Max.
Bedding Soil

The Existing Materialat the Bearing Level shall be Removed and Replaced to a Minimum Depth of 6-Inches or ⅛ of the Outside Diameter of the Pipe, whichever is Greater, with Bedding Material.

In Areas of over Excavation, Encasement shall extend from Trench Wall. Pay Limits shall not Exceed 12" Max. as shown on Detail. Additional Encasement shall be Incidental.

* Sewer Gravel 6" Min.or ⅛ O.D. of the Pipe, whichever is Greater.
** Minimum 2" HMAC Type "D" for Trench Repair in Local / Residential Streets.
** Minimum 3" HMAC Type "C" for Trench Repair in Collector / Arterial Streets.

PROPERTY OF
SAN ANTONIO WATER SYSTEM
SAN ANTONIO, TEXAS

SANITARY SEWER PIPE LAID IN TRENCH

APPROVED	REVISED
MARCH 2008	DEC 2018

DD-804-01 SHEET 1 OF 1

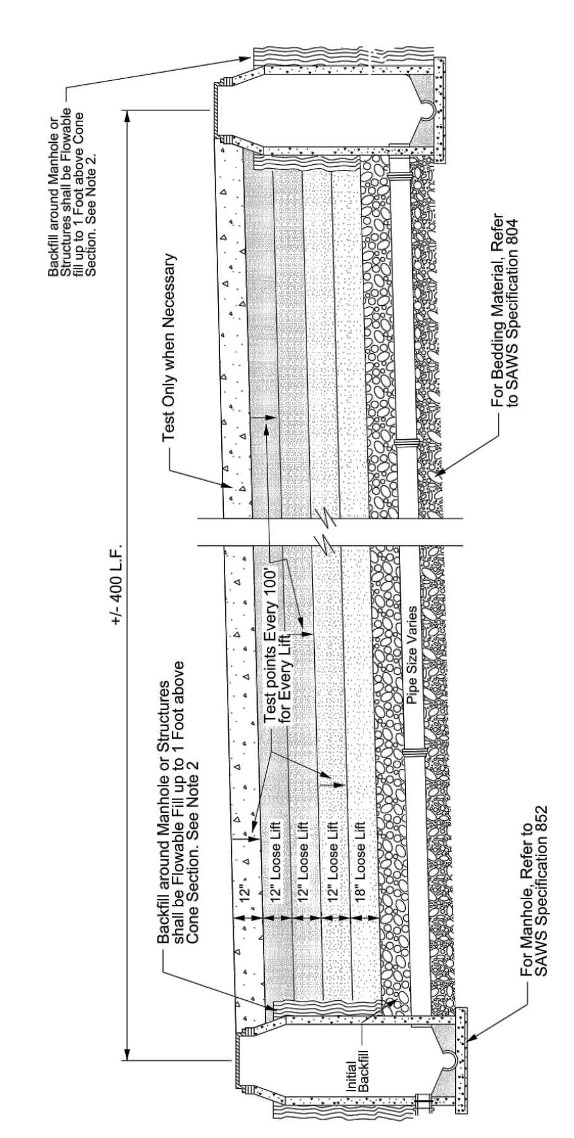
Backfill around Manhole or Structures shall be Flowable fill up to 1 Foot above Cone Section. See Note 2.
Test Only when Necessary
For Bedding Material, Refer to SAWS Specification 804
+/- 400 L.F.
Test points Every 100' for Every Lift
Pipe Size Varies
Backfill around Manhole or Structures shall be Flowable Fill up to 1 Foot above Cone Section. See Note 2
12"
12" Loose Lift
12" Loose Lift
12" Loose Lift
18" Loose Lift
For Manhole, Refer to SAWS Specification 852
Initial Backfill

NOTES:
1. The Compaction Report will indicate the Station and the Depth of eact Test Point.
2. When Contractor opts to backfill, all work will be subject to section 804
3. Insure Compaction Probe Penetrates to same Depth as Lift.

PROPERTY OF
SAN ANTONIO WATER SYSTEM
SAN ANTONIO, TEXAS

TRENCH COMPACTION DETAIL

APPROVED	REVISED
MARCH 2018	DEC 2018

DD 804-02 SHEET 1 OF 1

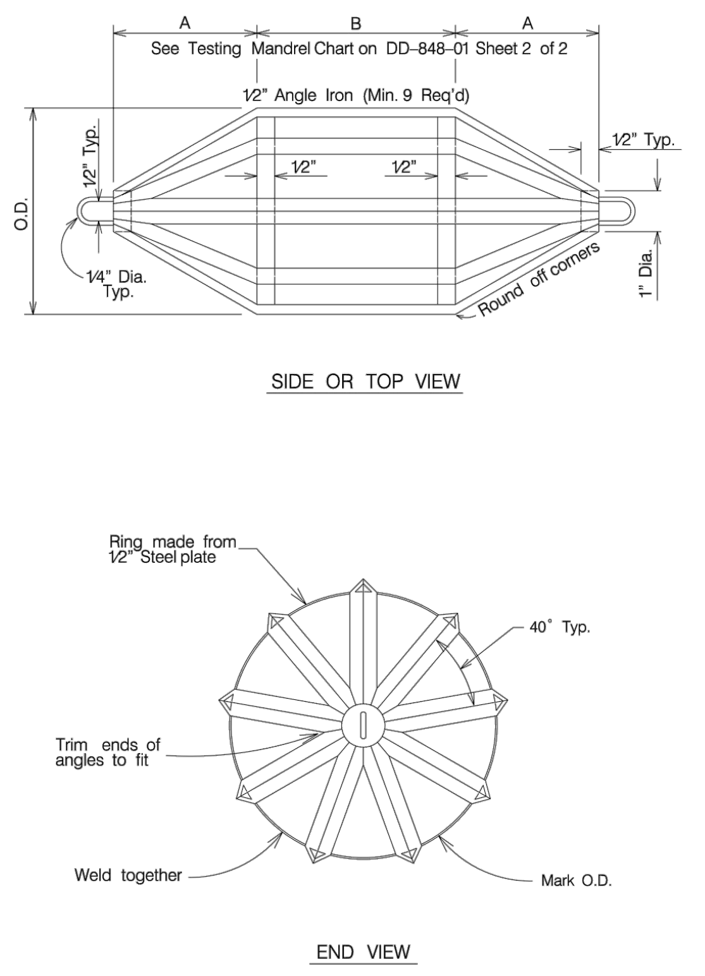
A
B
A
See Testing Mandrel Chart on DD–848–01 Sheet 2 of 2
1⁄2" Angle Iron (Min. 9 Req'd)
1⁄2" Typ.
1⁄2"
1⁄2"
1⁄2" Typ.
O.D.
1⁄4" Dia. Typ.
Round off corners
1" Dia.
SIDE OR TOP VIEW
Ring made from 1⁄2" Steel plate
40° Typ.
Trim ends of angles to fit
Weld together
Mark O.D.
END VIEW

Note:
All mandrels must be approved by SAWS Construction Inspections and stamped before use.

PROPERTY OF
SAN ANTONIO WATER SYSTEM
SAN ANTONIO, TEXAS

GO, NO GO DEFLECTION TESTING MANDREL

APPROVED	REVISED
March 2008	

DD–848–01 SHEET 1 OF 2

			MANDREL O.D.	RING O.D.
SIZE	A	B*	PVC (SDR-26)	PVC (SDR-26)
6"	4.0"	4.5"	5.50	4.79
8"	5.5"	6"	7.37	6.66
10"	7.0"	7.5"	9.21	8.50
12"	8.0"	9"	10.96	10.25
15"	10.0"	11"	13.42	12.71
18"	12.0"	13.5"	——	——
21"	14.0"	16"	——	——
24"	16.0"	18"	——	——
27"	18.0"	20"	——	——

* Minimum Length

CHART

Notes:
PVC pipes and fittings 6" to 15" in diameter shall conform to ASTM D-3034-08.
PVC pipes and fittings 18" to 27" in diameter shall conform to ASTM F-679-08.

This information is provided as a reference. All deflection testing shall be done in accordance with TCEQ Chapter 217.

PROPERTY OF
SAN ANTONIO WATER SYSTEM
SAN ANTONIO, TEXAS

GO, NO GO DEFLECTION TESTING MANDREL CHART

APPROVED	REVISED
MARCH 2008	APRIL 2014

DD-848-01 SHEET 2 OF 2

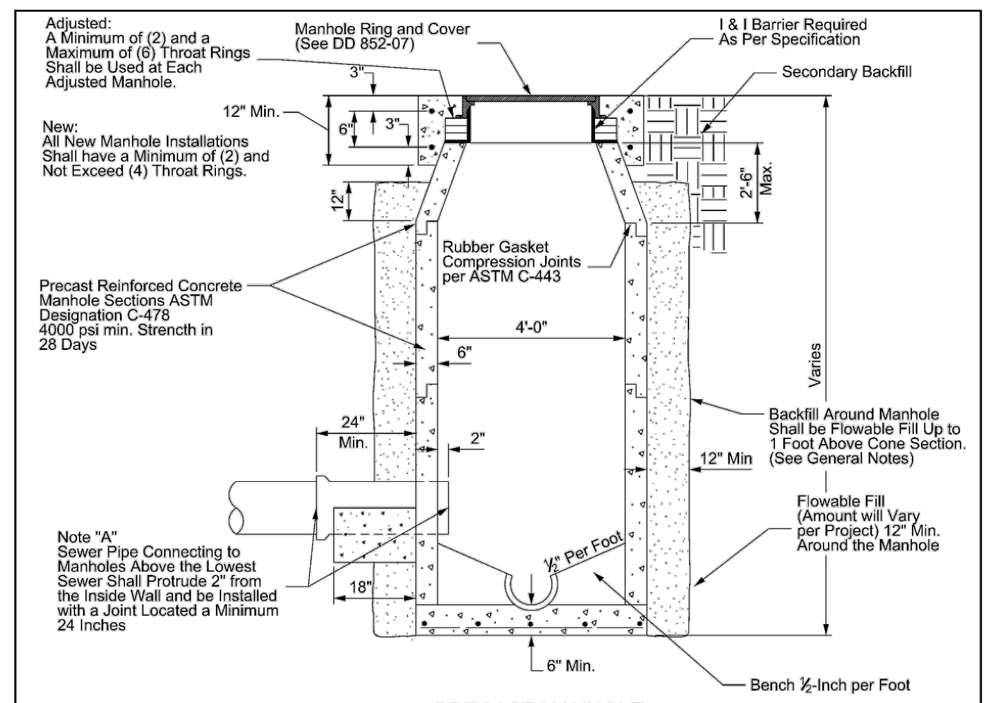
Adjusted: A Minimum of (2) and a Maximum of (6) Throat Rings Shall be Used at Each Adjusted Manhole.
Manhole Ring and Cover (See DD 852-07)
I & I Barrier Required As Per Specification
Secondary Backfill
3"
12" Min.
6"
3"
New: All New Manhole Installations Shall have a Minimum of (2) and Not Exceed (4) Throat Rings.
12"
2'-6" Max.
Rubber Gasket Compression Joints per ASTM C-443
Precast Reinforced Concrete Manhole Sections ASTM Designation C-478 4000 psi min. Strencth in 28 Days
4'-0"
6"
Varies
24" Min.
2"
Backfill Around Manhole Shall be Flowable Fill Up to 1 Foot Above Cone Section. (See General Notes)
12" Min
Flowable Fill (Amount will Vary per Project) 12" Min. Around the Manhole
Note "A" Sewer Pipe Connecting to Manholes Above the Lowest Sewer Shall Protrude 2" from the Inside Wall and be Installed with a Joint Located a Minimum 24 Inches
18"
½" Per Foot
6" Min.
Bench ½-Inch per Foot

PRECAST MANHOLE

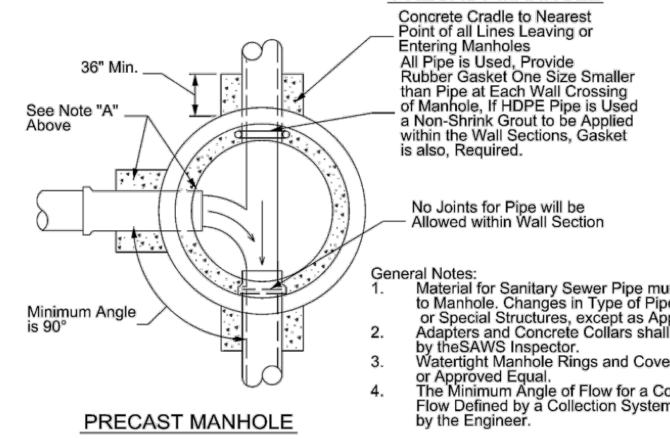
Concrete Cradle to Nearest Point of all Lines Leaving or Entering Manholes
All Pipe is Used, Provide Rubber Gasket One Size Smaller than Pipe at Each Wall Crossing of Manhole, If HDPE Pipe is Used a Non-Shrink Grout to be Applied within the Wall Sections, Gasket is also, Required.
36" Min.
See Note "A" Above
No Joints for Pipe will be Allowed within Wall Section
Minimum Angle is 90°

General Notes:
1. Material for Sanitary Sewer Pipe must be the Same from Manhole to Manhole. Changes in Type of Pipe may be Made Only at Manholes, or Special Structures, except as Approved by the SAWS Inspector.
2. Adapters and Concrete Collars shall be Used as Directed and Approved by theSAWS Inspector.
3. Watertight Manhole Rings and Covers shall be Trans-Tex A77 "O" Ring or Approved Equal.
4. The Minimum Angle of Flow for a Connecting Sewer to the Direction of Flow Defined by a Collection System is 90 Degrees, unless Approved by the Engineer.

PRECAST MANHOLE

PROPERTY OF
SAN ANTONIO WATER SYSTEM
SAN ANTONIO, TEXAS

STANDARD PRECAST MANHOLE

APPROVED	REVISED
MAY 2013	AUG 2019

DD-852-01 SHEET 1 OF 2

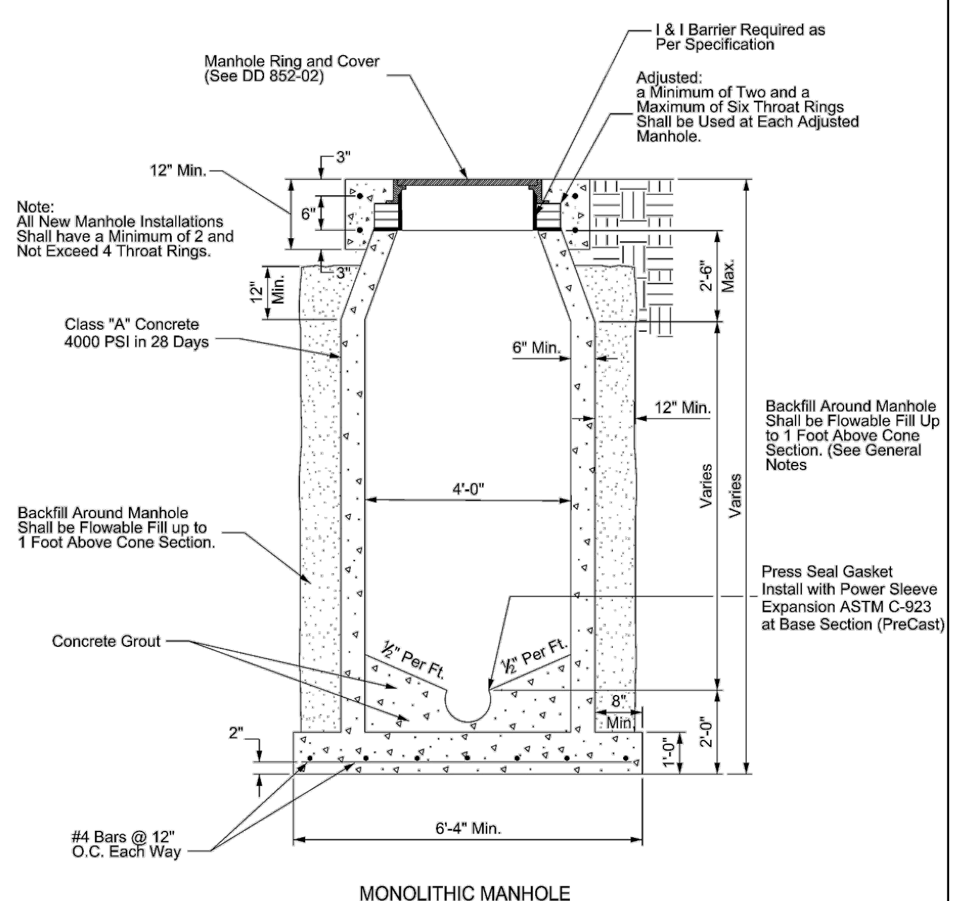
Manhole Ring and Cover (See DD 852-02)
I & I Barrier Required as Per Specification
Adjusted: a Minimum of Two and a Maximum of Six Throat Rings Shall be Used at Each Adjusted Manhole.
12" Min.
3"
6"
Note: All New Manhole Installations Shall have a Minimum of 2 and Not Exceed 4 Throat Rings.
3"
12" Min.
2'-6" Max.
Class "A" Concrete 4000 PSI in 28 Days
6" Min.
12" Min.
Backfill Around Manhole Shall be Flowable Fill Up to 1 Foot Above Cone Section. (See General Notes
4'-0"
Varies
Varies
Backfill Around Manhole Shall be Flowable Fill up to 1 Foot Above Cone Section.
Press Seal Gasket Install with Power Sleeve Expansion ASTM C-923 at Base Section (PreCast)
Concrete Grout
½" Per Ft.
½" Per Ft.
8" Min.
2"
1'-0"
2'-0"
#4 Bars @ 12" O.C. Each Way
6'-4" Min.

MONOLITHIC MANHOLE

General Notes:
1. Material for Sanitary Sewer Pipe Must be the Same from Manhole to Manhole. Changes in Type of Pipe May be Made only at Manholes, or Special Structures, Except as Approved by the Project Engineer.
2. Adaptors and Concrete Collars shall be used as approved by the SAWS Project Engineer.
3. Watertight Manhole Rings and Covers shall be Trans-Tex A77 "O" Ring or Approved Equal.

PROPERTY OF
SAN ANTONIO WATER SYSTEM
SAN ANTONIO, TEXAS

STANDARD MONOLITHIC MANHOLE

APPROVED	REVISED
March 2008	AUG 2019

DD 852-01 SHEET 2 OF 2

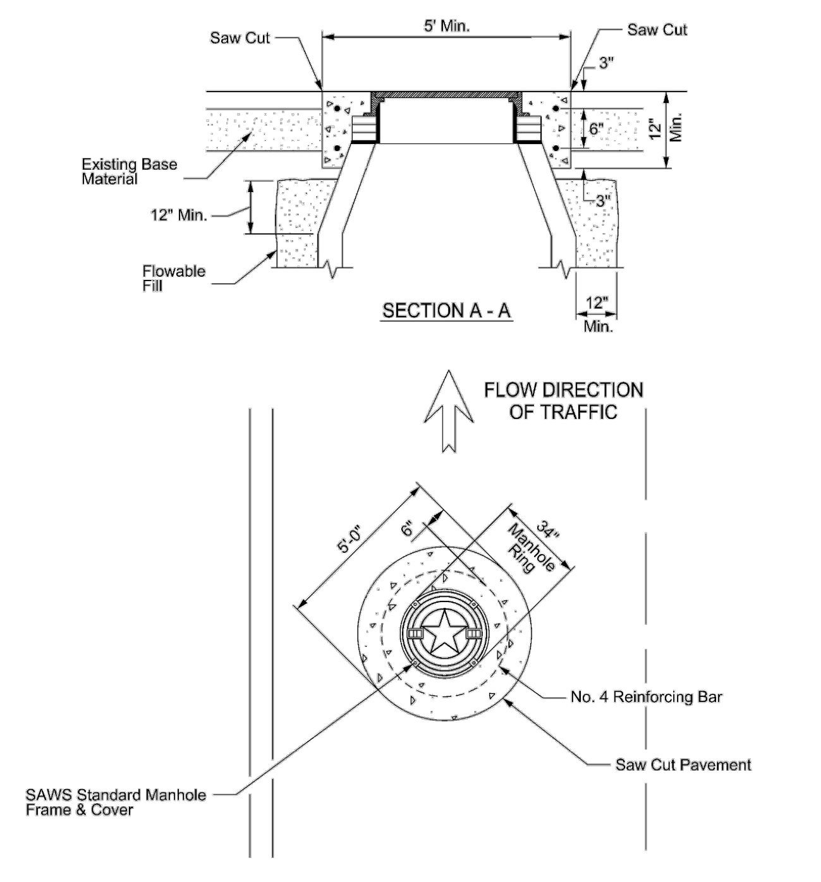
Saw Cut
5' Min.
Saw Cut
3"
6"
12" Min.
Existing Base Material
12" Min.
3"
Flowable Fill
SECTION A - A
12" Min.
FLOW DIRECTION OF TRAFFIC
5'-0"
6"
34" Manhole Ring
No. 4 Reinforcing Bar
Saw Cut Pavement
SAWS Standard Manhole Frame & Cover

NOTE:
1. The Concrete Shall be 4000 PSI Minimum and Reinforced with No. 4 Bars as Shown.
2. The Concrete Shall Extend to Edge of Saw Cut Pavement.
3. Manhole Ring Encasement is Required on all Manholes.
4. Manhole Lid shall Open in the Direction of Traffic or Downstream in Parkway

PROPERTY OF
SAN ANTONIO WATER SYSTEM
SAN ANTONIO, TEXAS

MANHOLE RING ENCASEMENT DETAIL

APPROVED	REVISED
AUGUST 2009	AUG 2019

DD 852-03 SHEET 1 OF 2

Depth and grade of service laterals as shown, are typical only. Actual depth, alignment and grade of service laterals shall be determined by the Engineer based on the elevations of the sewer main, street, natural ground and building to be serviced.

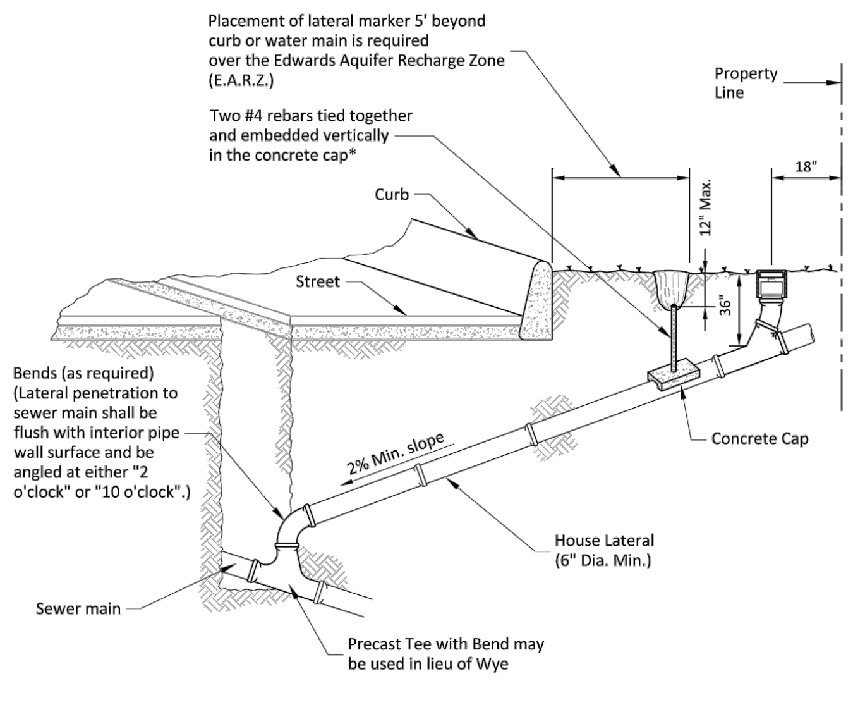
Placement of lateral marker 5' beyond curb or water main is required over the Edwards Aquifer Recharge Zone (E.A.R.Z.)
Two #4 rebars tied together and embedded vertically in the concrete cap*
Property Line
18"
12" Max.
Curb
Street
36"
Bends (as required) (Lateral penetration to sewer main shall be flush with interior pipe wall surface and be angled at either "2 o'clock" or "10 o'clock".)
2% Min. slope
Concrete Cap
House Lateral (6" Dia. Min.)
Sewer main
Precast Tee with Bend may be used in lieu of Wye

HOUSE LATERAL DETAIL

Note:
A minimum of 3' of cover to subgrade is necessary, otherwise concrete encasement will be required.

PROPERTY OF
SAN ANTONIO WATER SYSTEM
SAN ANTONIO, TEXAS

HOUSE LATERAL DETAIL (IN THE E.A.R.Z.)

APPROVED	REVISED
March 2008	December 2018

DD-854-EARZ SHEET 1 OF 1

LATERAL CONNECTION TO EXISTING SEWER MAIN

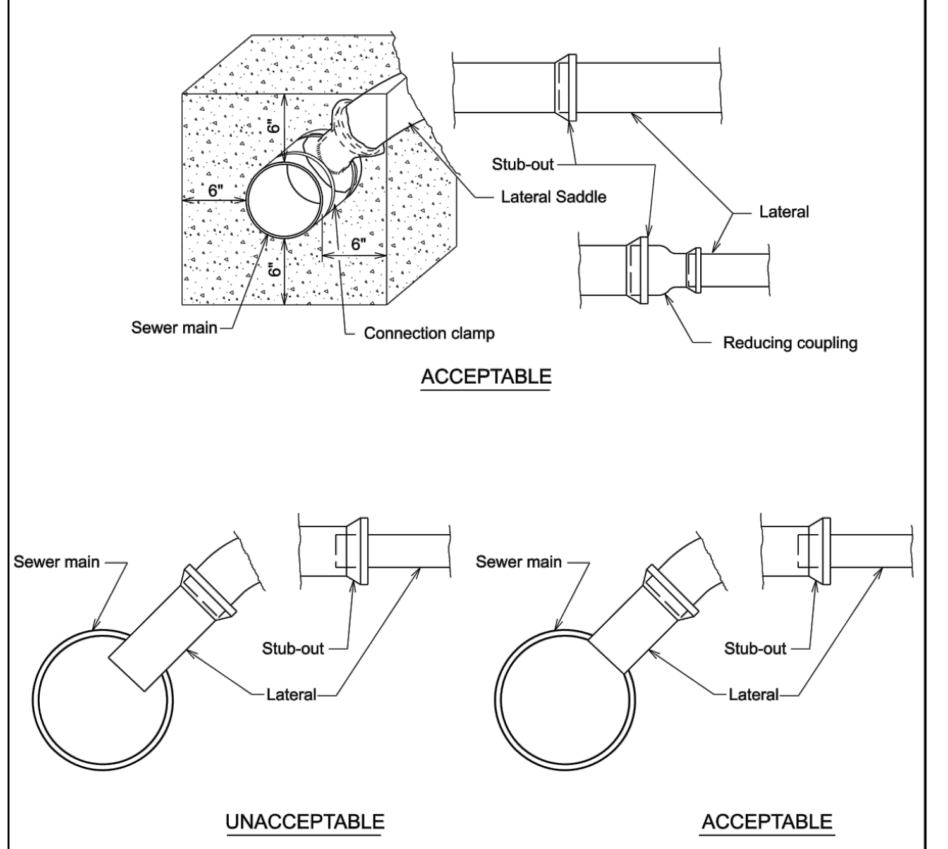
6"
6"
6"
6"
Stub-out
Lateral Saddle
Lateral
Sewer main
Connection clamp
Reducing coupling
ACCEPTABLE
Sewer main
Stub-out
Lateral
Sewer main
Stub-out
Lateral
UNACCEPTABLE
ACCEPTABLE

Note:
The saddle shall be permanently bonded to the existing main by the use of compounds or or clamps as recommended by the manufacturer.

PROPERTY OF
SAN ANTONIO WATER SYSTEM
SAN ANTONIO, TEXAS

LATERAL CONNECTION

APPROVED	REVISED
MARCH 2008	APRIL 2014

DD-854-03 SHEET 1 OF 1

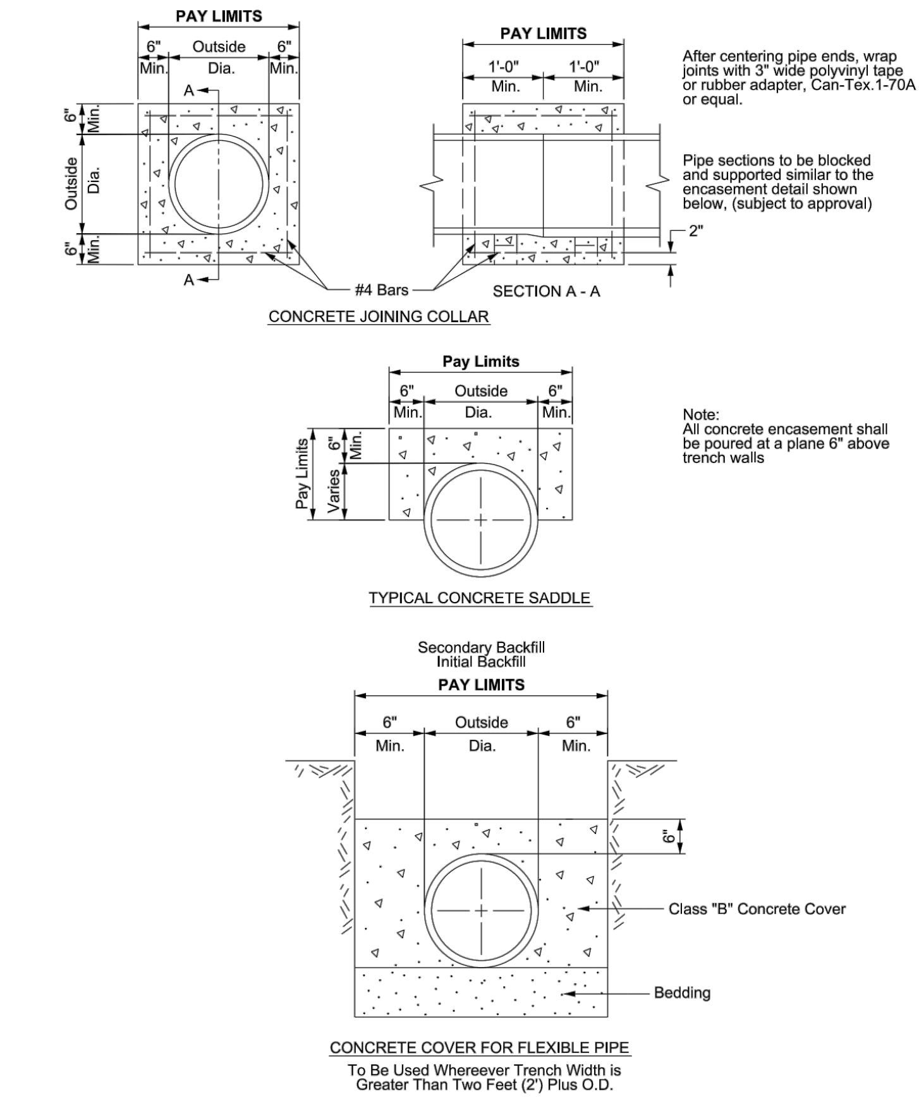
PAY LIMITS
6" Min.
Outside Dia.
6" Min.
A
6" Min.
Outside Dia.
6" Min.
#4 Bars
CONCRETE JOINING COLLAR
PAY LIMITS
1'-0" Min.
1'-0" Min.
2"
SECTION A - A
Pay Limits
6" Min.
Outside Dia.
6" Min.
Pay Limits
Varies
TYPICAL CONCRETE SADDLE
Secondary Backfill
Initial Backfill
PAY LIMITS
6" Min.
Outside Dia.
6" Min.
6"
Class "B" Concrete Cover
Bedding
CONCRETE COVER FOR FLEXIBLE PIPE

After centering pipe ends, wrap joints with 3" wide polyvinyl tape or rubber adapter, Can-Tex.1-70A or equal.

Pipe sections to be blocked and supported similar to the encasement detail shown below, (subject to approval)

Note:
All concrete encasement shall be poured at a plane 6" above trench walls

To Be Used Whereever Trench Width is Greater Than Two Feet (2') Plus O.D.

PROPERTY OF
SAN ANTONIO WATER SYSTEM
SAN ANTONIO, TEXAS

TYPICAL CONCRETE DETAILS

APPROVED	REVISED
MARCH 2008	DEC 2018

DD 858-02 SHEET 1 OF 1

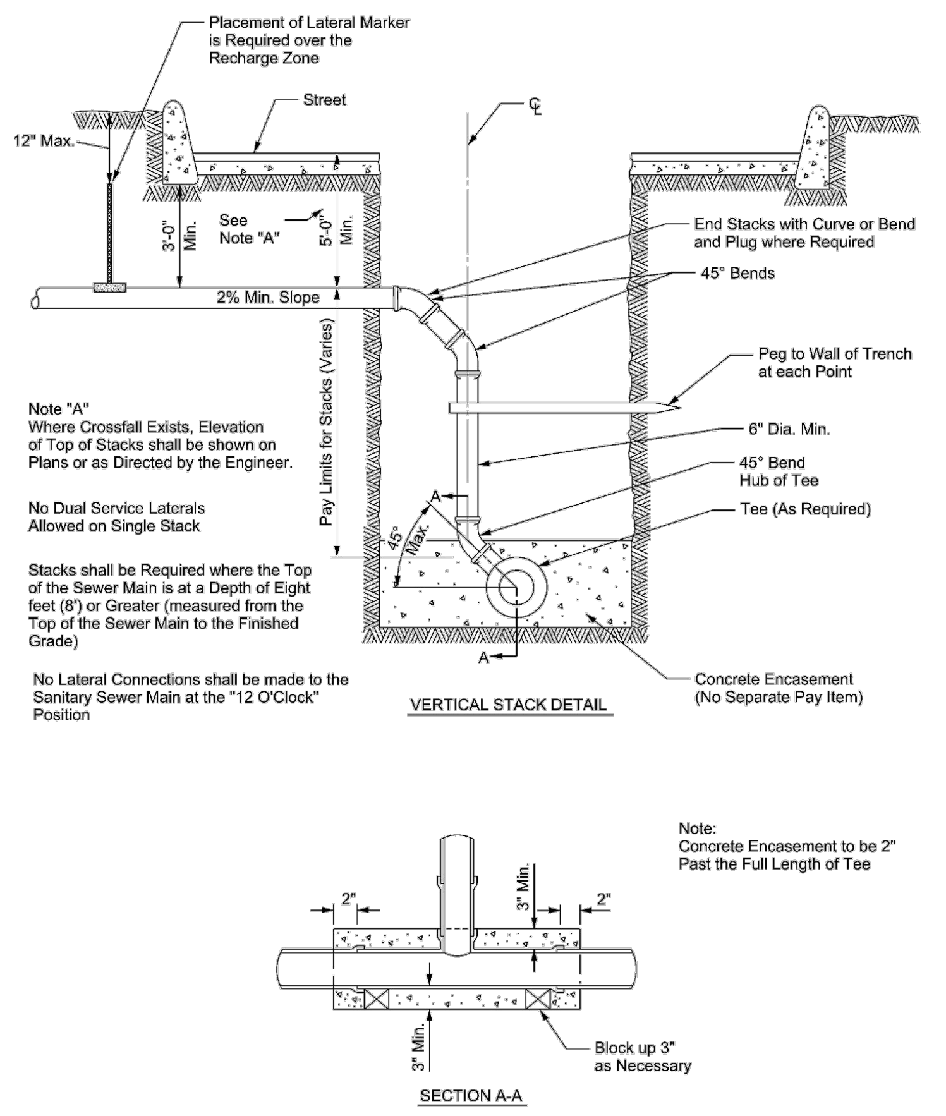
Placement of Lateral Marker is Required over the Recharge Zone
Street
℄
12" Max.
3'-0" Min.
See Note "A"
5'-0" Min.
2% Min. Slope
End Stacks with Curve or Bend and Plug where Required
45° Bends
Peg to Wall of Trench at each Point
Pay Limits for Stacks (Varies)
6" Dia. Min.
45° Bend Hub of Tee
Tee (As Required)
45° Max.
A
A
Concrete Encasement (No Separate Pay Item)
VERTICAL STACK DETAIL
2"
3" Min.
2"
3" Min.
Block up 3" as Necessary
SECTION A-A

Note "A"
Where Crossfall Exists, Elevation of Top of Stacks shall be shown on Plans or as Directed by the Engineer.

No Dual Service Laterals Allowed on Single Stack

Stacks shall be Required where the Top of the Sewer Main is at a Depth of Eight feet (8') or Greater (measured from the Top of the Sewer Main to the Finished Grade)

No Lateral Connections shall be made to the Sanitary Sewer Main at the "12 O'Clock" Position

Note:
Concrete Encasement to be 2" Past the Full Length of Tee

PROPERTY OF
SAN ANTONIO WATER SYSTEM
SAN ANTONIO, TEXAS

TYPICAL VERTICAL STACK DETAIL

APPROVED	REVISED
MARCH 2008	AUG 2019

DD 860-01 SHEET 1 OF 1

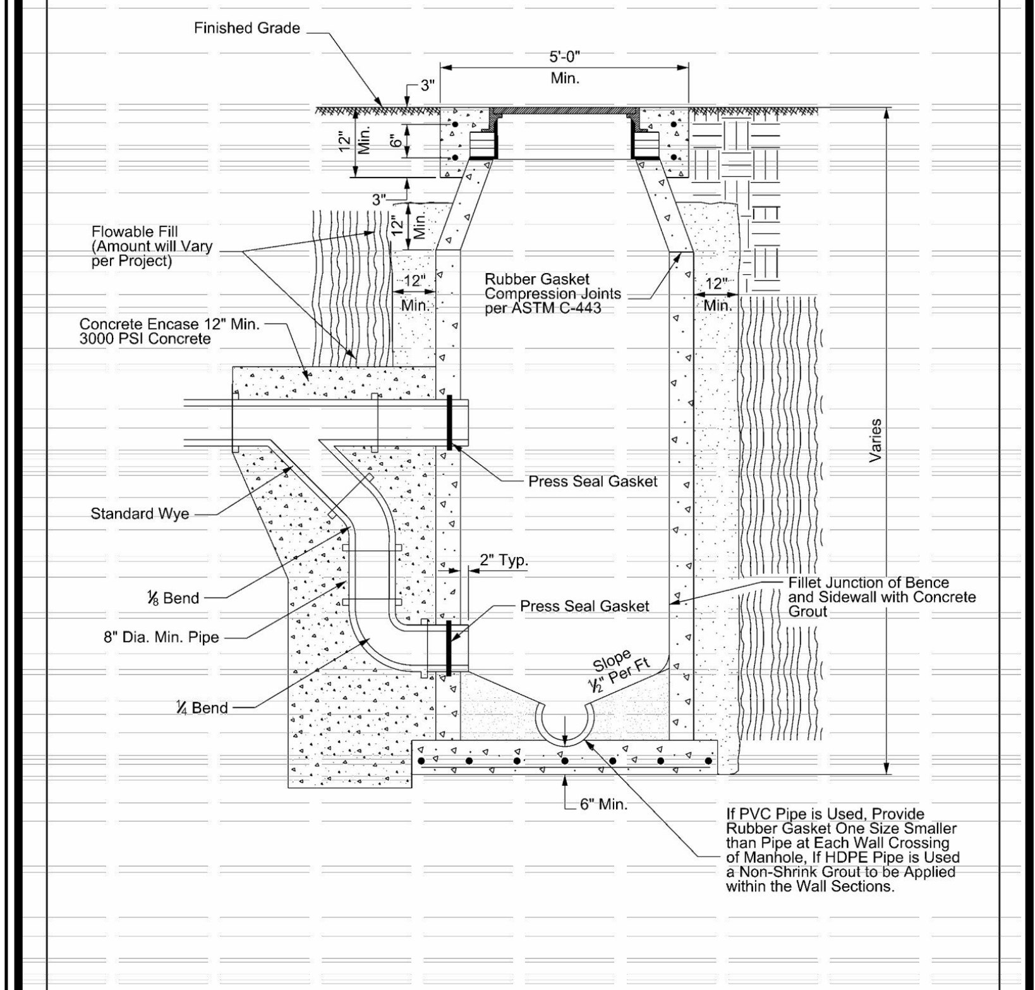
Finished Grade
3"
5'-0" Min.
12" Min.
6"
3"
12" Min.
Flowable Fill (Amount will Vary per Project)
12" Min.
Rubber Gasket Compression Joints per ASTM C-443
12" Min.
Concrete Encase 12" Min. 3000 PSI Concrete
Press Seal Gasket
Varies
Standard Wye
2" Typ.
⅛ Bend
Press Seal Gasket
Fillet Junction of Bence and Sidewall with Concrete Grout
8" Dia. Min. Pipe
Slope ½" Per Ft
¼ Bend
6" Min.
If PVC Pipe is Used, Provide Rubber Gasket One Size Smaller than Pipe at Each Wall Crossing of Manhole, If HDPE Pipe is Used a Non-Shrink Grout to be Applied within the Wall Sections.

NOTE: Price for Drop Fittings and Encasement to be Included with the Price of Manhole.

PROPERTY OF
SAN ANTONIO WATER SYSTEM
SAN ANTONIO, TEXAS

DROP MANHOLE DETAIL

APPROVED	REVISED
MARCH 2008	AUG 2019

DD-852-08 SHEET 1 OF 1

SEWER (DOS RIOS WRC)

DEVELOPER'S NAME: CONTINENTAL HOMES OF TEXAS, L.P.
ADDRESS: 5419 N LOOP 1604 E
CITY: SAN ANTONIO STATE: TEXAS ZIP: 78218
PHONE# (210) 496-2668 FAX#
SAWS BLOCK MAP# 66558 TOTAL EDU'S 92 TOTAL ACREAGE 18.171
TOTAL LINEAR FOOTAGE OF PIPE: 8" – 3,202 LF PLAT NO. 24-11800312
NUMBER OF LOTS 92 SAWS JOB NO. 24-1594

NO.	REVISION	DATE

STATE OF TEXAS
CALEB M. CHANCE
98401
LICENSED PROFESSIONAL ENGINEER
Caleb M. Chance
1/23/25

PAPE-DAWSON ENGINEERS
2000 NW LOOP 410 | SAN ANTONIO, TX 78213 | 210.375.9000
TEXAS ENGINEERING FIRM #470 | TEXAS SURVEYING FIRM #10028800

STONEHILL UNITS 2B & 6A
SAN ANTONIO, TEXAS

SANITARY SEWER DETAILS

PLAT NO. 24-11800312
JOB NO. 12456-13
DATE JULY 2024
DESIGNER RA
CHECKED BL DRAWN EG
SHEET C5.10

Date: Jan 22, 2025, 1:31pm User ID: ralvarez
File: P:\124\56\13\Design\Civil\SSDT-1245613.dwg

SAWS CONSTRUCTION NOTES

(LAST REVISED JANUARY 2022)

SAWS GENERAL SECTION

1. ALL MATERIALS AND CONSTRUCTION PROCEDURES WITHIN THE SCOPE OF THIS CONTRACT SHALL BE APPROVED BY THE SAN ANTONIO WATER SYSTEM (SAWS) AND COMPLY WITH THE PLANS, SPECIFICATIONS, GENERAL CONDITIONS AND WITH THE FOLLOWING AS APPLICABLE:
   - A. CURRENT TEXAS COMMISSION ON ENVIRONMENTAL QUALITY (TCEQ) "DESIGN CRITERIA FOR DOMESTIC WASTEWATER SYSTEM", TEXAS ADMINISTRATIVE CODE (TAC) TITLE 30 PART 1 CHAPTER 217 AND "PUBLIC DRINKING WATER", TAC TITLE 30 PART 1 CHAPTER 290.
   - B. CURRENT TXDOT "STANDARD SPECIFICATIONS FOR CONSTRUCTION OF HIGHWAYS, STREETS AND DRAINAGE".
   - C. CURRENT "SAN ANTONIO WATER SYSTEM STANDARD SPECIFICATIONS FOR WATER AND SANITARY SEWER CONSTRUCTION".
   - D. CURRENT CITY OF SAN ANTONIO "STANDARD SPECIFICATIONS FOR PUBLIC WORKS CONSTRUCTION".
   - E. CURRENT CITY OF SAN ANTONIO "UTILITY EXCAVATION CRITERIA MANUAL" (UECM).
2. THE CONTRACTOR SHALL NOT PROCEED WITH ANY PIPE INSTALLATION WORK UNTIL THEY OBTAIN A COPY OF THE APPROVED COUNTER PERMIT OR GENERAL CONSTRUCTION PERMIT (GCP) FROM THE CONSULTANT AND HAS BEEN NOTIFIED BY SAWS CONSTRUCTION INSPECTION DIVISION TO PROCEED WITH THE WORK AND HAS ARRANGED A MEETING WITH THE INSPECTOR AND CONSULTANT FOR THE WORK REQUIREMENTS. WORK COMPLETED BY THE CONTRACTOR WITHOUT AN APPROVED COUNTER PERMIT AND/OR A GCP WILL BE SUBJECT TO REMOVAL AND REPLACEMENT AT THE EXPENSE OF THE CONTRACTORS AND/OR THE DEVELOPER.
3. THE CONTRACTOR SHALL OBTAIN THE SAWS STANDARD DETAILS FROM THE SAWS WEBSITE, HTTP://WWW.SAWS.ORG/BUSINESS_CENTER/SPECS. UNLESS OTHERWISE NOTED WITHIN THE DESIGN PLANS.
4. THE CONTRACTOR IS TO MAKE ARRANGEMENTS WITH THE SAWS CONSTRUCTION INSPECTION DIVISION AT (210) 233–2973, ON NOTIFICATION PROCEDURES THAT WILL BE USED TO NOTIFY AFFECTED HOME RESIDENTS AND/OR PROPERTY OWNERS 48 HOURS PRIOR TO BEGINNING ANY WORK.
5. LOCATION AND DEPTH OF EXISTING UTILITIES AND SERVICE LATERALS SHOWN ON THE PLANS ARE UNDERSTOOD TO BE APPROXIMATE. ACTUAL LOCATIONS AND DEPTHS MUST BE FIELD VERIFIED BY THE CONTRACTOR AT LEAST 1 WEEK PRIOR TO CONSTRUCTION. IT SHALL BE THE CONTRACTOR'S RESPONSIBILITY TO LOCATE UTILITY SERVICE LINES AS REQUIRED FOR CONSTRUCTION AND TO PROTECT THEM DURING CONSTRUCTION AT NO COST TO SAWS.
6. THE CONTRACTOR SHALL VERIFY THE EXACT LOCATION OF UNDERGROUND UTILITIES AND DRAINAGE STRUCTURES AT LEAST 1–2 WEEKS PRIOR TO CONSTRUCTION WHETHER SHOWN ON PLANS OR NOT. PLEASE ALLOW UP TO 7 BUSINESS DAYS FOR LOCATES REQUESTING PIPE LOCATION MARKERS ON SAWS FACILITIES. THE FOLLOWING CONTACT INFORMATION ARE SUPPLIED FOR VERIFICATION PURPOSES:
   - SAWS UTILITY LOCATES: HTTP://WWW.SAWS.ORG/SERVICE/LOCATES
   - COSA DRAINAGE (210) 207–0724 OR (210) 207–6026
   - COSA TRAFFIC SIGNAL OPERATIONS (210) 206–8480
   - COSA TRAFFIC SIGNAL DAMAGES (210) 207–3951
   - TEXAS STATE WIDE ONE CALL LOCATOR 1–800–545–6005 OR 811
7. THE CONTRACTOR SHALL BE RESPONSIBLE FOR RESTORING EXISTING FENCES, CURBS, STREETS, DRIVEWAYS, SIDEWALKS, LANDSCAPING AND STRUCTURES TO ITS ORIGINAL OR BETTER CONDITION IF DAMAGES ARE MADE AS A RESULT OF THE PROJECT'S CONSTRUCTION.
8. ALL WORK IN TEXAS DEPARTMENT OF TRANSPORTATION (TXDOT) AND/OR BEXAR COUNTY RIGHT–OF–WAY SHALL BE DONE IN ACCORDANCE WITH RESPECTIVE CONSTRUCTION SPECIFICATIONS AND PERMIT REQUIREMENTS.
9. THE CONTRACTOR SHALL COMPLY WITH CITY OF SAN ANTONIO OR OTHER GOVERNING MUNICIPALITY'S TREE ORDINANCES WHEN EXCAVATING NEAR TREES.
10. THE CONTRACTOR SHALL NOT PLACE ANY WASTE MATERIALS IN THE 100–YEAR FLOOD PLAIN WITHOUT FIRST OBTAINING AN APPROVED FLOOD PLAIN PERMIT.
11. HOLIDAY WORK: CONTRACTORS WILL NOT BE ALLOWED TO PERFORM SAWS WORK ON SAWS RECOGNIZED HOLIDAYS. REQUEST SHOULD BE SENT TO CONSTWORKREQ@SAWS.ORG.

    WEEKEND WORK: CONTRACTORS ARE REQUIRED TO NOTIFY THE SAWS INSPECTION CONSTRUCTION DEPARTMENT 48 HOURS IN ADVANCE TO REQUEST WEEKEND WORK. REQUEST SHOULD BE SENT TO CONSTWORKREQ@SAWS.ORG.

    ANY AND ALL SAWS UTILITY WORK INSTALLED WITHOUT HOLIDAY/WEEKEND APPROVAL WILL BE SUBJECT TO BE UNCOVERED FOR PROPER INSPECTION.
12. COMPACTION NOTE (ITEM 804): THE CONTRACTOR SHALL BE RESPONSIBLE FOR MEETING THE COMPACTION REQUIREMENTS ON ALL TRENCH BACKFILL AND FOR PAYING FOR THE TESTS PERFORMED BY A THIRD PARTY. COMPACTION TESTS WILL BE DONE AT ONE LOCATION POINT RANDOMLY SELECTED, OR AS INDICATED BY THE SAWS INSPECTOR AND/OR THE TEST ADMINISTRATOR, PER EACH 12–INCH LOOSE LIFT PER 400 LINEAR FEET AT A MINIMUM. THIS PROJECT WILL NOT BE ACCEPTED AND FINALIZED BY SAWS WITHOUT THIS REQUIREMENT BEING MET AND VERIFIED BY PROVIDING ALL NECESSARY DOCUMENTED TEST RESULTS.
13. A COPY OF ALL TESTING REPORTS SHALL BE FORWARDED TO SAWS CONSTRUCTION INSPECTION DIVISION.

SAWS SEWER NOTES

1. THE CONTRACTOR IS RESPONSIBLE FOR ENSURING THAT NO SANITARY SEWER OVERFLOW (SSO) OCCURS AS A RESULT OF THEIR WORK. ALL CONTRACTOR PERSONNEL RESPONSIBLE FOR SSO PREVENTION AND CONTROL SHALL BE TRAINED ON PROPER RESPONSE. SHOULD AN SSO OCCUR, THE CONTRACTOR SHALL:
   - A. IDENTIFY THE SOURCE OF THE SSO AND NOTIFY SAWS EMERGENCY OPERATIONS CENTER (EOC) IMMEDIATELY AT (210) 233–2014. PROVIDE THE ADDRESS OF THE SPILL AND AN ESTIMATED VOLUME OR FLOW.
   - B. ATTEMPT TO ELIMINATE THE SOURCE OF THE SSO.
   - C. CONTAIN SEWAGE FROM THE SSO TO THE EXTENT OF PREVENTING A POSSIBLE CONTAMINATION OF WATERWAYS.
   - D. CLEAN UP SPILL SITE (RETURN CONTAINED SEWAGE TO THE COLLECTION SYSTEM IF POSSIBLE) AND PROPERLY DISPOSE OF CONTAMINATED SOIL/MATERIALS.
   - E. CLEAN THE AFFECTED SEWER MAINS AND REMOVE ANY DEBRIS.
   - F. MEET ALL POST–SSO REQUIREMENTS AS PER THE EPA CONSENT DECREE, INCLUDING LINE CLEANING AND TELEVISING THE AFFECTED SEWER MAINS (AT SAWS DIRECTION) WITHIN 24 HOURS.

    SHOULD THE CONTRACTOR FAIL TO ADDRESS AN SSO IMMEDIATELY AND TO SAWS SATISFACTION, THEY WILL BE RESPONSIBLE FOR ALL COSTS INCURRED BY SAWS, INCLUDING ANY FINES FROM EPA, TCEQ AND/OR ANY OTHER FEDERAL, STATE OR LOCAL AGENCIES.

    NO SEPARATE MEASUREMENT OR PAYMENT SHALL BE MADE FOR THIS WORK. ALL WORK SHALL BE DONE ACCORDING TO GUIDELINES SET BY THE TCEQ AND SAWS.
2. IF BYPASS PUMPING IS REQUIRED, THE CONTRACTOR SHALL PERFORM SUCH WORK IN ACCORDANCE WITH SAWS STANDARD SPECIFICATION FOR WATER AND SANITARY SEWER CONSTRUCTION, ITEM NO. 864, "BYPASS PUMPING".
3. PRIOR TO TIE–INS, ANY SHUTDOWNS OF EXISTING FORCE MAINS OF ANY SIZE MUST BE COORDINATED WITH THE SAWS CONSTRUCTION INSPECTION DIVISION AT (210) 233–2973 AT LEAST ONE WEEK IN ADVANCE OF THE SHUTDOWN. THE CONTRACTOR MUST ALSO PROVIDE A SEQUENCE OF WORK AS RELATED TO THE TIE–INS; THIS IS AT NO ADDITIONAL COST TO SAWS OR THE PROJECT AND IT IS THE RESPONSIBILITY OF THE CONTRACTOR TO SEQUENCE THE WORK ACCORDINGLY.
4. SEWER PIPE WHERE WATER LINE CROSSES SHALL BE 160 PSI AND MEET THE REQUIREMENTS OF ASTM D2241, TAC 217.53 AND TCEQ 290.44(E)(4)(B). CONTRACTOR SHALL CENTER A 20' JOINT OF 160 PSI PRESSURE RATED PVC AT THE PROPOSED WATER CROSSING.
5. ELEVATIONS POSTED FOR TOP OF MANHOLES ARE FOR REFERENCE ONLY: IT SHALL BE THE RESPONSIBILITY OF THE CONTRACTOR TO MAKE ALLOWANCES AND ADJUSTMENTS FOR TOP OF MANHOLES TO MATCH THE FINISHED GRADE OF THE PROJECT'S IMPROVEMENTS. (NSPI)
6. SPILLS, OVERFLOWS, OR DISCHARGES OF WASTEWATER: ALL SPILLS, OVERFLOWS, OR DISCHARGES OF WASTEWATER, RECYCLED WATER, PETROLEUM PRODUCTS, OR CHEMICALS MUST BE REPORTED IMMEDIATELY TO THE SAWS INSPECTOR ASSIGNED TO THE COUNTER PERMIT OR GENERAL CONSTRUCTION PERMIT (GCP). THIS REQUIREMENT APPLIES TO EVERY SPILL, OVERFLOW, OR DISCHARGE REGARDLESS OF SIZE.
7. MANHOLE AND ALL PIPE TESTING (INCLUDING THE TV INSPECTION) MUST BE PERFORMED AND PASSED PRIOR TO FINAL FIELD ACCEPTANCE BY SAWS CONSTRUCTION INSPECTION DIVISION, AS PER THE SAWS SPECIFICATIONS FOR WATER AND SANITARY SEWER CONSTRUCTION.
8. ALL PVC PIPE OVER 14 FEET OF COVER SHALL BE EXTRA STRENGTH WITH MINIMUM PIPE STIFFNESS OF 115 PSI.

PROJECT SEWER NOTES

1. ALL RESIDENTIAL SEWER SERVICE LATERALS ARE 6" DIA. AND SHALL BE EXTENDED TO 10' PAST THE PROPERTY LINE AND CAPPED AND SEALED. CONTRACTOR SHALL INSTALL A 2" X 4" STAKE, FOUR (4) FEET LONG, TWO (2) FEET DEEP INTO THE GROUND AT THE END OF EACH SERVICE. NO SEPARATE PAY ITEM.
2. CONTRACTOR TO INSTALL CLEANOUTS AT THE END OF ALL SEWER LATERALS, PER LATERAL DETAIL SHEET C5.10
3. NO VERTICAL STACKS ALLOWED FOR ANY LOTS UNLESS OTHERWISE SPECIFIED BY THE ENGINEER.
4. ALL 6" SEWER LATERALS WILL BE SET AT 2% GRADE FROM THE MAIN TO THE PROPERTY LINE.
5. WHEN HORIZONTAL DISTANCE BETWEEN SEWER PIPES AND WATER MAIN IS LESS THAN 9 FOOT OF SEPARATION, SEWER MAIN SHALL BE INSTALLED WITH 150 PSI (MIN) PRESSURE PIPE AND FITTINGS IN ACCORDANCE WITH SAWS CONSTRUCTION CRITERIA FOR CONSTRUCTION OF SEWER MAINS IN THE VICINITY OF WATER MAINS.
6. CONTRACTOR SHALL ENSURE THAT MANHOLES OUTSIDE OF PAVED AREAS ARE SET WITH TOP ELEVATIONS 6" ABOVE FINISHED GRADE WITH CONCRETE RING ENCASEMENT.
7. ALL SEWER PIPES SHALL BE 8" PVC (SDR 26), UNLESS OTHERWISE NOTED.
8. CONTRACTOR IS TO VERIFY EXISTING INVERT OF EXISTING SANITARY SEWER MAINS AND ALERT ENGINEER IMMEDIATELY OF ANY DIFFERENCE FROM INVERT SHOWN ON PLANS.
9. CONTRACTOR SHALL PROTECT ALL EXISTING FENCES. ANY FENCE DAMAGED BY THE CONTRACTOR SHALL BE REPAIRED BY THE CONTRACTOR AT THEIR EXPENSE.
10. THE CONTRACTOR WILL BE RESPONSIBLE FOR DETERMINING EXACT LOCATION OF ALL UTILITIES AND DRAINAGE STRUCTURES WHETHER SHOWN ON THE PLANS OR NOT. THE CONTRACTOR SHALL UNCOVER EXISTING UTILITIES PRIOR TO CONSTRUCTION TO VERIFY SIZE, GRADE, AND LOCATION. THE CONTRACTOR SHALL NOTIFY THE ENGINEER IMMEDIATELY OF ANY DEVIATIONS FROM PLANS PRIOR TO BEGINNING CONSTRUCTION. ANY DAMAGE TO EXISTING UTILITIES, WHETHER SHOWN ON THE PLANS OR NOT, SHALL BE THE CONTRACTOR'S RESPONSIBILITY TO REPAIR, AT HIS EXPENSE.
11. CONCRETE RING ENCASEMENT TO BE INSTALLED ON ALL MANHOLES AND, WITHIN LIMITS OF PAVEMENT, BE INSTALLED TO THE TOP OF THE BASE LAYER WITH A MINIMUM OF 2" OF ASPHALT ON TOP OF THE RING ENCASEMENT.
12. MANHOLE OPENING INCREASED TO 30" AS PER TAC CHAPTER 217.55.
13. ALL SEWER PIPE LATERALS SHALL BE SDR 26 (CLASS 160) PVC PIPE.
14. IF THE GIVEN TOP OF MANHOLE ELEVATION DOES NOT AGREE ON ACTUAL GROUND SURFACE OR FINISH PAVEMENT, THE CONTRACTOR SHALL ADJUST ELEVATIONS SUCH THAT THE TOP OF MANHOLE SHALL BE 0.5' ABOVE EXISTING GROUND, OR FLUSH TO FINISH ASPHALT PAVEMENT.
15. ALL MANHOLES CONSTRUCTED OVER THE EDWARDS AQUIFER RECHARGE ZONE SHOULD BE WATERTIGHT.

SEWER (DOS RIOS WRC)

DEVELOPER'S NAME: CONTINENTAL HOMES OF TEXAS, L.P.
ADDRESS: 5419 N LOOP 1604 E
CITY: SAN ANTONIO STATE: TEXAS ZIP: 78218
PHONE# (210) 496–2668 FAX#
SAWS BLOCK MAP# 66558 TOTAL EDU'S 92 TOTAL ACREAGE 18.171
TOTAL LINEAR FOOTAGE OF PIPE: 8" – 3,202 LF PLAT NO. 24–11800312
NUMBER OF LOTS 92 SAWS JOB NO. 24–1594

NO.	REVISION	DATE

CALEB M. CHANCE
98401

Caleb
1/23/25

PAPE-DAWSON ENGINEERS

2000 NW LOOP 410 I SAN ANTONIO, TX 78213 I 210.375.9000
TEXAS ENGINEERING FIRM #470 I TEXAS SURVEYING FIRM #10028800

STONEHILL UNITS 2B & 6A

SAN ANTONIO, TEXAS

SANITARY SEWER NOTES

PLAT NO. 24-11800312
JOB NO. 12456–13
DATE JULY 2024
DESIGNER RA
CHECKED BL DRAWN RA
SHEET C5.11

Date: Jan 22, 2025, 1:31pm User ID: ralvarez
File: P:\124\56\13\Design\Civil\SSDT-1245613.dwg

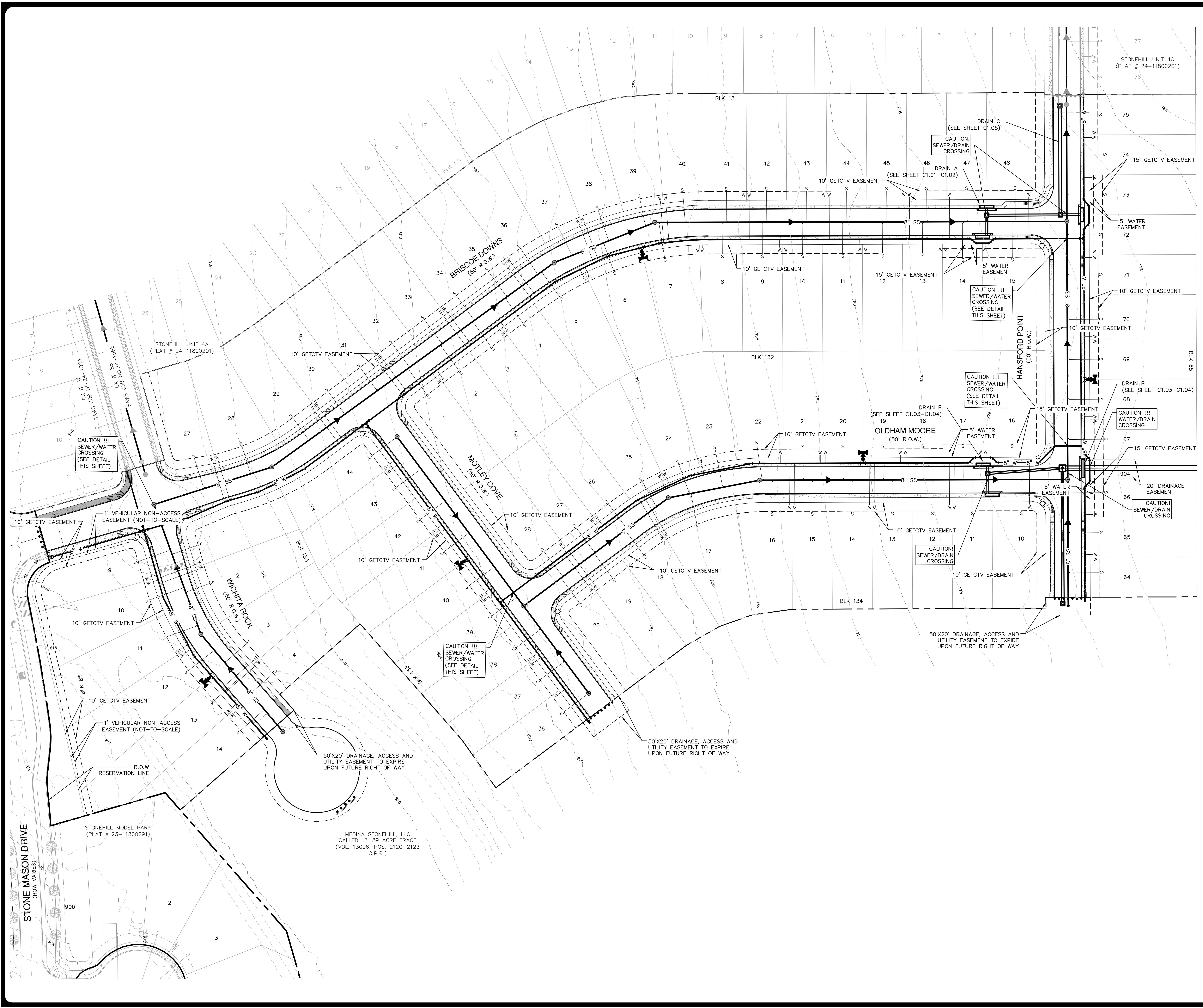
BRISCOE DOWNS
(50' R.O.W.)
MOTLEY COVE
(50' R.O.W.)
WICHITA ROCK
(50' R.O.W.)
OLDHAM MOORE
(50' R.O.W.)
HANSFORD POINT
(50' R.O.W.)
STONE MASON DRIVE
(ROW VARIES)
BLK 131
BLK 132
BLK 133
BLK 134
BLK 85
STONEHILL UNIT 4A
(PLAT # 24-11800201)
STONEHILL MODEL PARK
(PLAT # 23-11800291)
MEDINA STONEHILL, LLC
CALLED 131.89 ACRE TRACT
(VOL. 13006, PGS. 2120-2123
O.P.R.)
EX 8" W
SAWS JOB NO.24-1084
EX 8" SS
SAWS JOB NO.24-1565
8" SS
8" W
10' GETCTV EASEMENT
15' GETCTV EASEMENT
5' WATER EASEMENT
20' DRAINAGE EASEMENT
1' VEHICULAR NON-ACCESS EASEMENT (NOT-TO-SCALE)
R.O.W RESERVATION LINE
DRAIN A
(SEE SHEET C1.01-C1.02)
DRAIN B
(SEE SHEET C1.03-C1.04)
DRAIN C
(SEE SHEET C1.05)
CAUTION !!! SEWER/WATER CROSSING (SEE DETAIL THIS SHEET)
CAUTION !!! SEWER/DRAIN CROSSING
CAUTION !!! WATER/DRAIN CROSSING
50'X20' DRAINAGE, ACCESS AND UTILITY EASEMENT TO EXPIRE UPON FUTURE RIGHT OF WAY
904
900

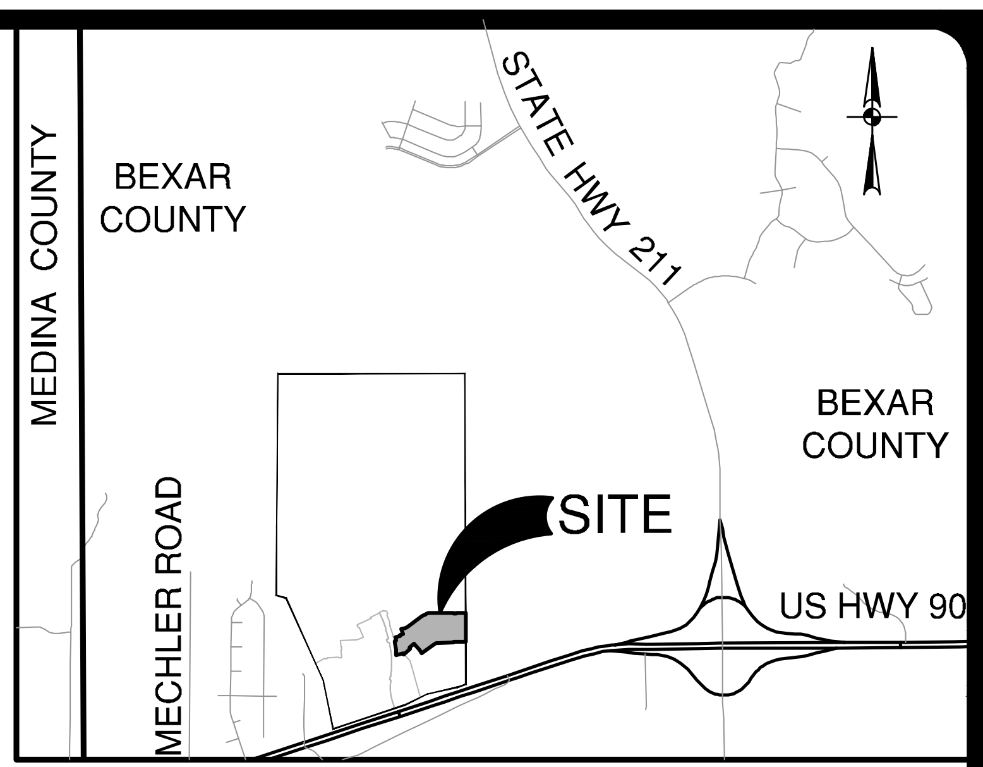
MEDINA COUNTY
BEXAR COUNTY
STATE HWY 211
BEXAR COUNTY
SITE
MECHLER ROAD
US HWY 90

LOCATION MAP

NOT-TO-SCALE

SCALE: 1"= 50'

0' 50' 100' 150'

UTILITY LEGEND

PROJECT LIMITS	——— — — ———
EXISTING WATER	— — — W — — —
EXISTING SEWER	— — — SS — — — MANHOLE
PROPOSED SEWER	——— SS ——— MANHOLE
PROPOSED WATER	——— W ——— FIRE HYDRANT
PROPOSED WYE & LATERAL	——— S
SINGLE WATER SERVICE	——— W
DUAL WATER SERVICE	W W
STREET LIGHTS	SL
GAS, ELECTRIC, TELEPHONE & CABLE TELEVISION EASEMENT	GETCTV

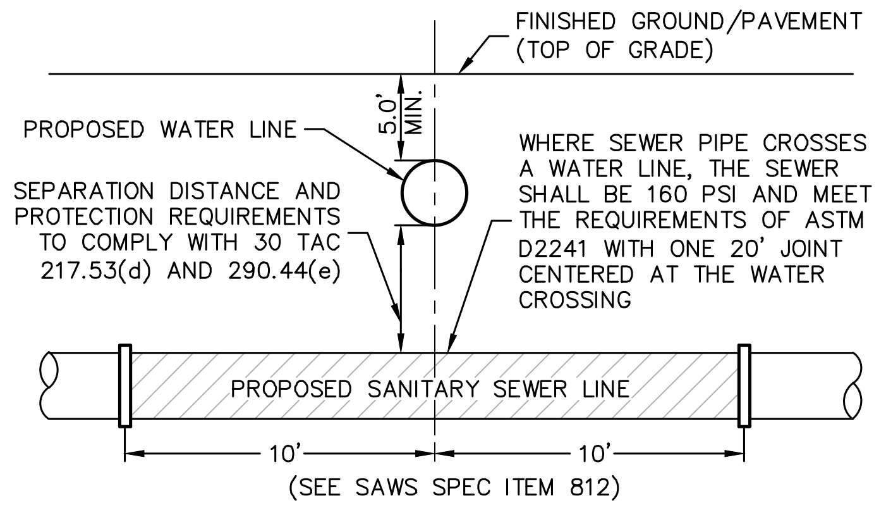
FINISHED GROUND/PAVEMENT
(TOP OF GRADE)
5.0' MIN.
PROPOSED WATER LINE
SEPARATION DISTANCE AND PROTECTION REQUIREMENTS TO COMPLY WITH 30 TAC 217.53(d) AND 290.44(e)
WHERE SEWER PIPE CROSSES A WATER LINE, THE SEWER SHALL BE 160 PSI AND MEET THE REQUIREMENTS OF ASTM D2241 WITH ONE 20' JOINT CENTERED AT THE WATER CROSSING
PROPOSED SANITARY SEWER LINE
10'
10'

(SEE SAWS SPEC ITEM 812)

TYPICAL SANITARY SEWER/WATER CROSSING DETAIL

NOT-TO-SCALE

CONDUIT NOTES:

1. CONTRACTOR SHALL INSTALL PERMANENT MARKERS IN PROPOSED CURB WHERE CONDUITS CROSS THE ROADWAY (BOTH SIDES).
2. CONDUITS SHALL BE PVC WITH MINIMUM BURY OF 36 INCHES BELOW PROPOSED FINISHED GRADE. SCHEDULE 80 TO BE USED FOR CPS CONDUITS, ALL OTHER CONDUITS ARE SCHEDULE 40.
3. ALL CONDUITS SHALL BE EXTENDED BEHIND CURBS OR PROPOSED SIDEWALKS A MINIMUM OF 3 FEET AND CAPPED FOR FUTURE USE.
4. ALL CONDUIT SLEEVES TO BE USED FOR ELECTRIC, GAS, OR TELECOMMUNICATION UTILITY CROSSINGS SHALL BE INSTALLED TO MEET OR EXCEED DESIGN REQUIREMENTS FOR THE UTILITY AGENCY WHICH THEY ARE SERVING, INCLUDING BUT NOT LIMITED TO THE DEPTH, TRENCH PLACEMENT, AND PROXIMITY TO OTHER UTILITIES. THE CONTRACTOR IS SOLELY RESPONSIBLE FOR VERIFYING AND INSTALLING THE CONDUIT SLEEVES TO MEET THESE SPECIFICATIONS INCLUDING COORDINATING WITH THE UTILITY AGENCY FOR ANY REQUIRED INSPECTIONS

TRENCH EXCAVATION SAFETY PROTECTION:

CONTRACTOR AND/ OR CONTRACTOR'S INDEPENDENTLY RETAINED EMPLOYEE OR STRUCTURAL DESIGN/ GEOTECHNICAL/ SAFETY/EQUIPMENT CONSULTANT, IF ANY, SHALL REVIEW THESE PLANS AND ANY AVAILABLE GEOTECHNICAL INFORMATION AND THE ANTICIPATED INSTALLATION SITES WITHIN THE PROJECT WORK AREA IN ORDER TO IMPLEMENT CONTRACTOR'S TRENCH EXCAVATION SAFETY PROTECTION SYSTEMS, PROGRAMS AND /OR PROCEDURES FOR THE PROJECT DESCRIBED IN THE CONTRACT DOCUMENTS. THE CONTRACTOR'S IMPLEMENTATION OF THESE SYSTEMS, PROGRAMS AND/OR PROCEDURES SHALL PROVIDE FOR ADEQUATE TRENCH EXCAVATION SAFETY PROTECTION THAT COMPLY WITH AS A MINIMUM, OSHA STANDARDS FOR TRENCH EXCAVATIONS. SPECIFICALLY, CONTRACTOR AND/OR CONTRACTOR'S INDEPENDENTLY RETAINED EMPLOYEE OR SAFETY CONSULTANT SHALL IMPLEMENT A TRENCH SAFETY PROGRAM IN ACCORDANCE WITH OSHA STANDARDS GOVERNING THE PRESENCE AND ACTIVITIES OF INDIVIDUALS WORKING IN AND AROUND TRENCH EXCAVATION.

CAUTION!!

CONTRACTOR SHALL BE REQUIRED TO LOCATE ALL PUBLIC OR PRIVATE UTILITIES INCLUDING BUT NOT LIMITING TO: WATER, SEWER, TELEPHONE AND FIBER OPTIC LINES, SITE LIGHTING ELECTRIC, SECONDARY ELECTRIC, PRIMARY ELECTRICAL DUCTBANKS, LANDSCAPE IRRIGATION FACILITIES, AND GAS LINES. ANY UTILITY CONFLICTS THAT ARISE SHOULD BE COMMUNICATED TO THE ENGINEER IMMEDIATELY AND PRIOR TO CONSTRUCTION. THE CONTRACTOR SHALL CONTACT 1-800-DIG-TESS A MINIMUM OF 48 HOURS PRIOR TO THE START OF CONSTRUCTION. ANY DAMAGE TO EXISTING UTILITIES SHALL BE THE SOLE RESPONSIBILITY OF THE CONTRACTOR AND THE REPAIR SHALL BE AT CONTRACTOR'S SOLE EXPENSE WHETHER THE UTILITY IS SHOWN ON THESE PLANS OR NOT.

NO.	REVISION	DATE

CALEB M. CHANCE
98401

Caleb M. Chance
8/2/24

PAPE-DAWSON ENGINEERS

2000 NW LOOP 410 I SAN ANTONIO, TX 78213 I 210.375.9000
TEXAS ENGINEERING FIRM #470 I TEXAS SURVEYING FIRM #10028800

STONEHILL UNITS 2B & 6A

SAN ANTONIO, TEXAS

OVERALL UTILITY PLAN

PLAT NO. 24-11800312
JOB NO. 12456-13
DATE JULY 2024
DESIGNER RA
CHECKED BL DRAWN EG
SHEET C6.00

Date: Aug 13, 2024, 8:09am User ID: ralvarez
File: P:\124\56\13\Design\Civil\UTOA-1245613.dwg

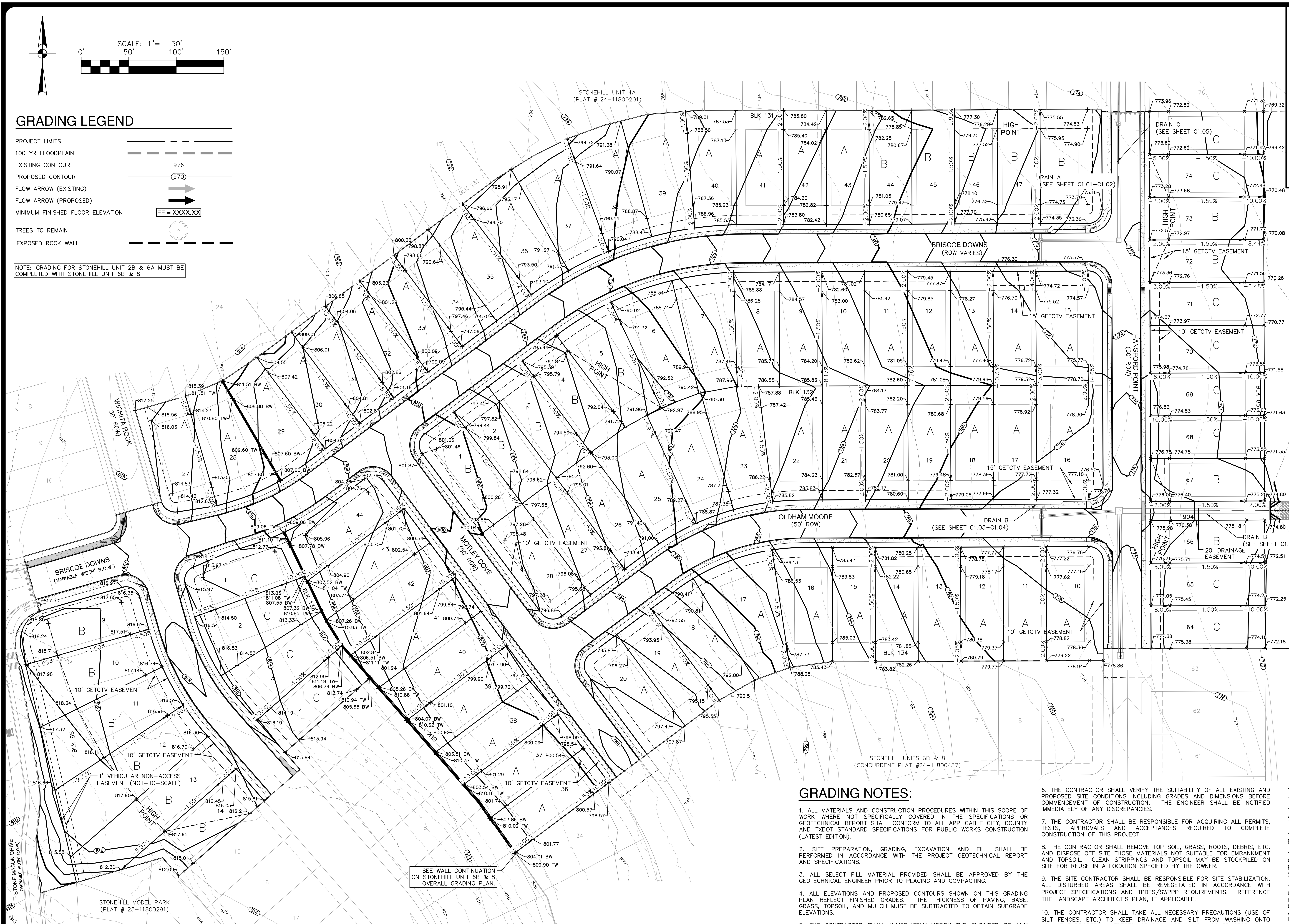
SCALE: 1"= 50'
0'
50'
100'
150'
STONEHILL UNIT 4A
(PLAT # 24-11800201)
BLK 131
BLK 132
BLK 134
BLK 85
BRISCOE DOWNS
(ROW VARIES)
BRISCOE DOWNS
(VARIABLE WIDTH R.O.W.)
OLDHAM MOORE
(50' ROW)
MOTLEY COVE
(50' ROW)
HANSFORD POINT
(50' ROW)
WICHITA ROCK
50' ROW
STONE MASON DRIVE
(VARIABLE WIDTH R.O.W.)
HIGH POINT
DRAIN A
(SEE SHEET C1.01-C1.02)
DRAIN B
(SEE SHEET C1.03-C1.04)
DRAIN C
(SEE SHEET C1.05)
15' GETCTV EASEMENT
10' GETCTV EASEMENT
20' DRAINAGE EASEMENT
1' VEHICULAR NON-ACCESS EASEMENT (NOT-TO-SCALE)
SEE WALL CONTINUATION ON STONEHILL UNIT 6B & 8 OVERALL GRADING PLAN.
STONEHILL UNITS 6B & 8
(CONCURRENT PLAT #24-11800437)
STONEHILL MODEL PARK
(PLAT # 23-11800291)

GRADING LEGEND

PROJECT LIMITS	——— – – ———
100 YR FLOODPLAIN	▬ ▬ ▬ ▬
EXISTING CONTOUR	– – –976– – –
PROPOSED CONTOUR	———970———
FLOW ARROW (EXISTING)	→
FLOW ARROW (PROPOSED)	➡
MINIMUM FINISHED FLOOR ELEVATION	FF = XXXX.XX
TREES TO REMAIN	✲
EXPOSED ROCK WALL	▬▭▬▭▬

NOTE: GRADING FOR STONEHILL UNIT 2B & 6A MUST BE COMPLETED WITH STONEHILL UNIT 6B & 8

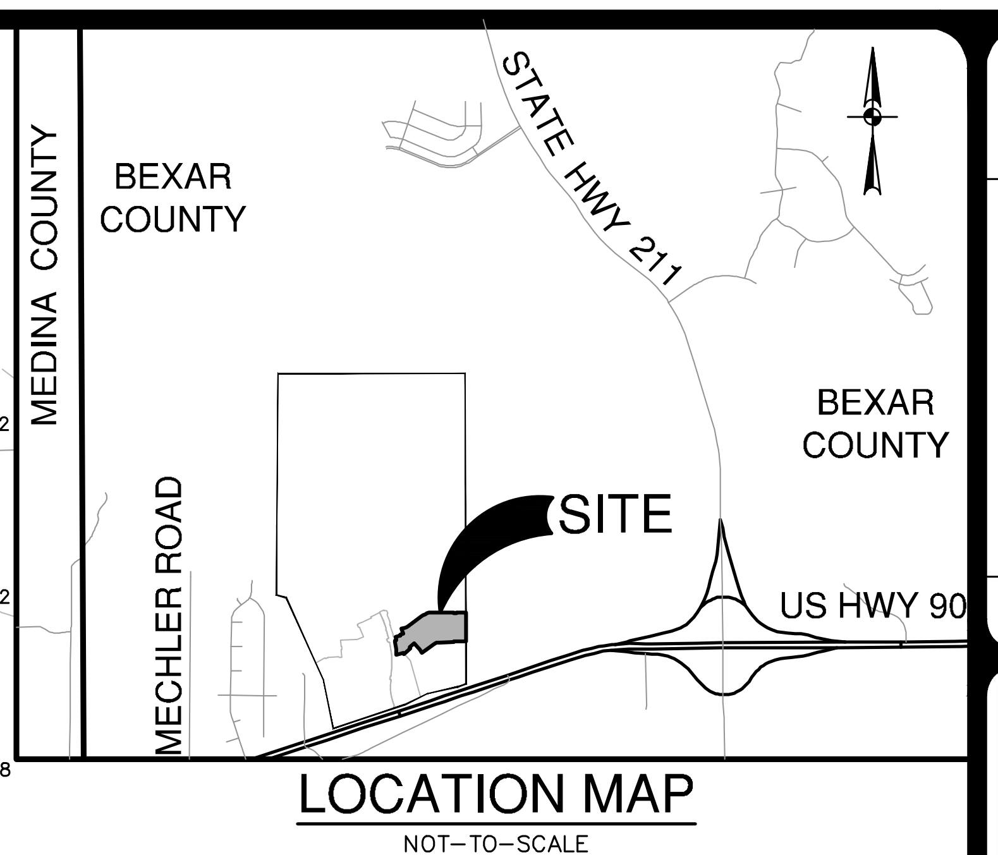
MEDINA COUNTY
BEXAR COUNTY
STATE HWY 211
BEXAR COUNTY
SITE
MECHLER ROAD
US HWY 90

LOCATION MAP

NOT-TO-SCALE

GRADING NOTES:

1. ALL MATERIALS AND CONSTRUCTION PROCEDURES WITHIN THIS SCOPE OF WORK WHERE NOT SPECIFICALLY COVERED IN THE SPECIFICATIONS OR GEOTECHNICAL REPORT SHALL CONFORM TO ALL APPLICABLE CITY, COUNTY AND TXDOT STANDARD SPECIFICATIONS FOR PUBLIC WORKS CONSTRUCTION (LATEST EDITION).

2. SITE PREPARATION, GRADING, EXCAVATION AND FILL SHALL BE PERFORMED IN ACCORDANCE WITH THE PROJECT GEOTECHNICAL REPORT AND SPECIFICATIONS.

3. ALL SELECT FILL MATERIAL PROVIDED SHALL BE APPROVED BY THE GEOTECHNICAL ENGINEER PRIOR TO PLACING AND COMPACTING.

4. ALL ELEVATIONS AND PROPOSED CONTOURS SHOWN ON THIS GRADING PLAN REFLECT FINISHED GRADES. THE THICKNESS OF PAVING, BASE, GRASS, TOPSOIL, AND MULCH MUST BE SUBTRACTED TO OBTAIN SUBGRADE ELEVATIONS.

5. THE CONTRACTOR SHALL IMMEDIATELY NOTIFY THE ENGINEER OF ANY QUESTIONS THAT MAY ARISE CONCERNING THE INTENT, PLACEMENT, OR LIMITS OF DIMENSIONS OR GRADES NECESSARY FOR CONSTRUCTION OF THIS PROJECT.

6. THE CONTRACTOR SHALL VERIFY THE SUITABILITY OF ALL EXISTING AND PROPOSED SITE CONDITIONS INCLUDING GRADES AND DIMENSIONS BEFORE COMMENCEMENT OF CONSTRUCTION. THE ENGINEER SHALL BE NOTIFIED IMMEDIATELY OF ANY DISCREPANCIES.

7. THE CONTRACTOR SHALL BE RESPONSIBLE FOR ACQUIRING ALL PERMITS, TESTS, APPROVALS AND ACCEPTANCES REQUIRED TO COMPLETE CONSTRUCTION OF THIS PROJECT.

8. THE CONTRACTOR SHALL REMOVE TOP SOIL, GRASS, ROOTS, DEBRIS, ETC. AND DISPOSE OFF SITE THOSE MATERIALS NOT SUITABLE FOR EMBANKMENT AND TOPSOIL. CLEAN STRIPPINGS AND TOPSOIL MAY BE STOCKPILED ON SITE FOR REUSE IN A LOCATION SPECIFIED BY THE OWNER.

9. THE SITE CONTRACTOR SHALL BE RESPONSIBLE FOR SITE STABILIZATION. ALL DISTURBED AREAS SHALL BE REVEGETATED IN ACCORDANCE WITH PROJECT SPECIFICATIONS AND TPDES/SWPPP REQUIREMENTS. REFERENCE THE LANDSCAPE ARCHITECT'S PLAN, IF APPLICABLE.

10. THE CONTRACTOR SHALL TAKE ALL NECESSARY PRECAUTIONS (USE OF SILT FENCES, ETC.) TO KEEP DRAINAGE AND SILT FROM WASHING ONTO ADJACENT PROPERTY, STREETS, OR DRAINAGE WAYS. CONTRACTOR SHALL IMMEDIATELY REMOVE SILT/DEBRIS WHICH WASHES OFFSITE OR INTO EXISTING STORM DRAIN SYSTEMS. (SEE SWPPP PLANS & TPDES BOOK).

11. THE CONTRACTOR SHALL OBTAIN GRADES SHOWN HEREON WITHIN +/– ONE-TENTH (0.10) FOOT.

12. IN PROPOSED PAVING AREAS, STREET DESIGN PLANS SHALL CONTROL. ALL EARTHEN SLOPES SHALL BE A MAXIMUM OF 3:1 AND A MINIMUM OF 1.0% UNLESS OTHERWISE SHOWN.

13. THE CONTRACTOR SHALL PROVIDE A SMOOTH TRANSITION BETWEEN EXISTING SITE AND PROPOSED IMPROVEMENTS.

14. THE CONTRACTOR SHALL BE RESPONSIBLE FOR RESTORING TO ITS ORIGINAL, OR BETTER, CONDITION ANY DAMAGE DONE TO EXISTING TREES, BUILDINGS, UTILITIES, FENCES, PAVEMENT, CURBS, OR DRIVEWAYS (NO SEPARATE PAY ITEMS).

15. THE CONTRACTOR SHALL EXERCISE EXTREME CAUTION IN WORKING NEAR UTILITIES, GAS LINES, SEWER, OR EXISTING APPURTENANCES. PRIOR TO PERFORMING ANY EXCAVATION, CONTRACTOR SHALL CONTACT ALL UTILITY COMPANIES AND ASSURE HIMSELF THAT ALL UTILITIES HAVE BEEN ADEQUATELY LOCATED AND IDENTIFIED. THE ENGINEER SHALL BE NOTIFIED IF ANY UTILITY CONFLICTS ARE DISCOVERED.

16. UTILITIES SHOWN ON THE PLANS ARE FROM INFORMATION SOURCES AVAILABLE AT THE TIME OF DESIGN BUT MAY NOT REPRESENT ALL EXISTING UTILITIES ON SITE. THE CONTRACTOR WILL BE RESPONSIBLE FOR DETERMINING EXACT LOCATION OF ALL UTILITIES WHETHER SHOWN ON THE PLANS OR NOT. THE CONTRACTOR SHALL UNCOVER EXISTING UTILITIES PRIOR TO CONSTRUCTION AND VERIFY SIZE, GRADE AND LOCATION. THE CONTRACTOR SHALL NOTIFY THE ENGINEER IMMEDIATELY OF ANY DEVIATIONS FROM PLANS PRIOR TO BEGINNING CONSTRUCTION. ANY DAMAGE TO EXISTING UTILITIES, WHETHER SHOWN ON THE PLANS OR NOT, SHALL BE THE CONTRACTORS RESPONSIBILITY TO REPAIR, AT HIS OWN EXPENSE.

17. POSITIVE DRAINAGE SHALL BE MAINTAINED THROUGHOUT THE SCOPE OF THE PROJECT. DRAINAGE SHALL BE DIRECTED AWAY FROM ALL BUILDING FOUNDATIONS. CONTRACTOR SHOULD TAKE PRECAUTIONS NOT TO ALLOW ANY PONDING OF WATER.

18. FOR FILL PLACEMENT ON HILL SIDES OR STEEP SLOPE AREAS, THE CONTRACTOR SHALL REFERENCE THE PROJECT SPECIFICATIONS AND GEOTECHNICAL REPORT FOR SPECIAL INSTRUCTIONS REGARDING BENCHING.

19. NO WORK SHALL BE PERFORMED IN A PUBLIC RIGHT-OF-WAY WITHOUT A PERMIT.

NO.	REVISION	DATE

BROOKE LINDHOLM
117104
5/30/25

PAPE-DAWSON ENGINEERS
2000 NW LOOP 410 I SAN ANTONIO, TX 78213 I 210.375.9000
TEXAS ENGINEERING FIRM #470 I TEXAS SURVEYING FIRM #10028800

STONEHILL UNITS 2B & 6A
SAN ANTONIO, TEXAS

OVERALL GRADING PLAN

PLAT NO. 24-11800312
JOB NO. 12456-13
DATE JULY 2024
DESIGNER RA
CHECKED BL DRAWN RA
SHEET C7.00

Date: May 30, 2025, 3:44pm User ID: ralvarez
File: P:\124\56\13\Design\Civil\GROA-1245613.dwg

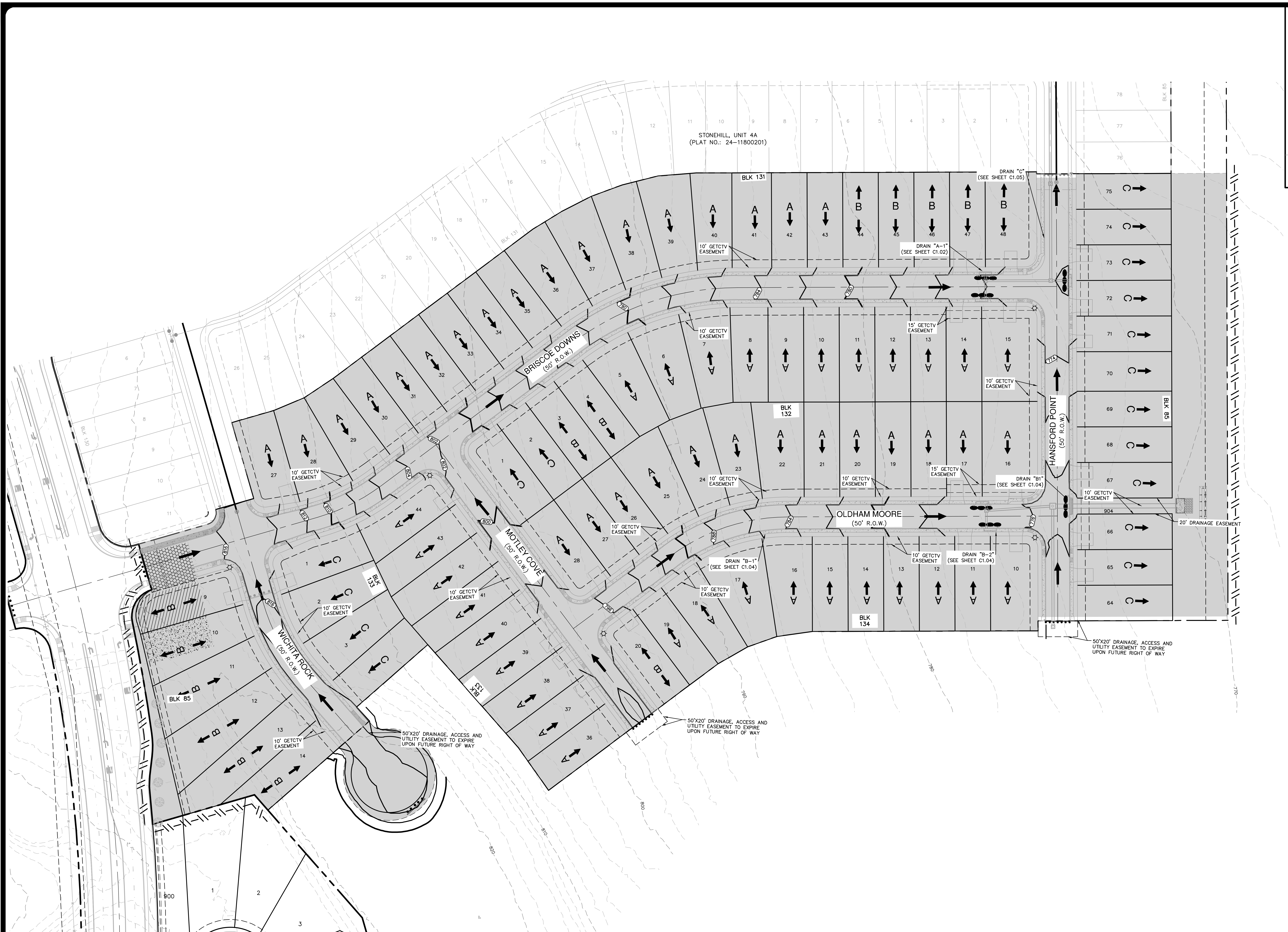
STONEHILL, UNIT 4A
(PLAT NO.: 24-11800201)
BLK 131
BLK 132
BLK 133
BLK 134
BLK 85
BRISCOE DOWNS (50' R.O.W.)
MOTLEY COVE (50' R.O.W.)
WICHITA ROCK (50' R.O.W.)
OLDHAM MOORE (50' R.O.W.)
HANSFORD POINT (50' R.O.W.)
DRAIN "C" (SEE SHEET C1.05)
DRAIN "A-1" (SEE SHEET C1.02)
DRAIN "B1" (SEE SHEET C1.04)
DRAIN "B-1" (SEE SHEET C1.04)
DRAIN "B-2" (SEE SHEET C1.04)
10' GETCTV EASEMENT
15' GETCTV EASEMENT
20' DRAINAGE EASEMENT
50'X20' DRAINAGE, ACCESS AND UTILITY EASEMENT TO EXPIRE UPON FUTURE RIGHT OF WAY
A
B
C

LOCATION MAP

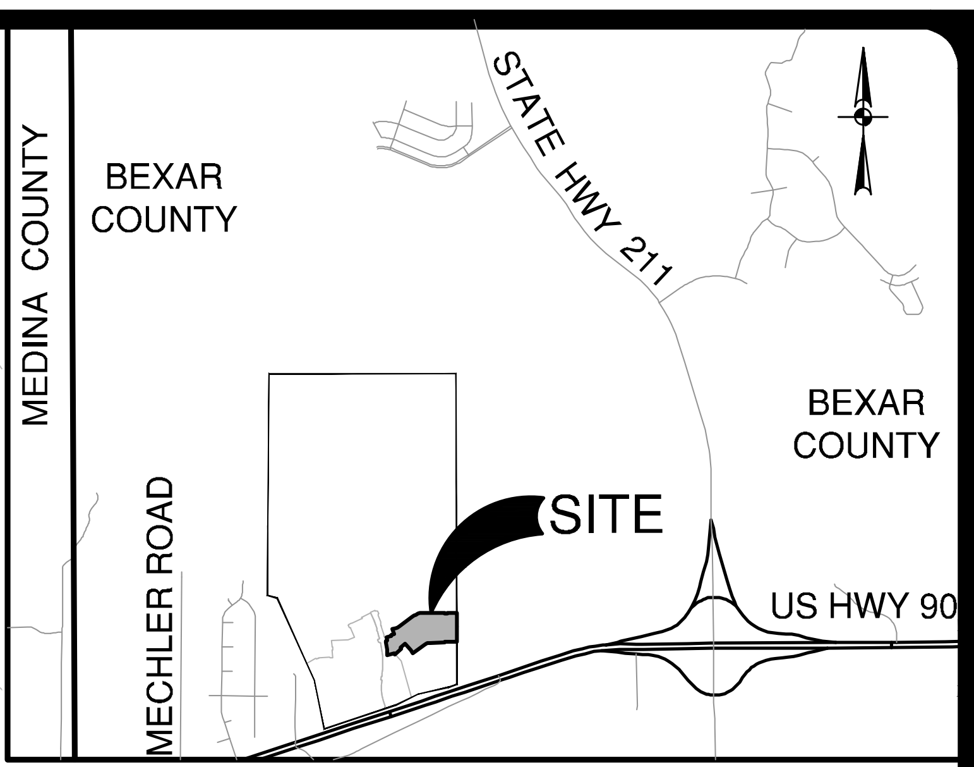
MEDINA COUNTY
BEXAR COUNTY
STATE HWY 211
BEXAR COUNTY
SITE
MECHLER ROAD
US HWY 90

NOT–TO–SCALE

SCALE: 1"= 60'

0' 60' 120' 180'

SWPPP LEGEND

PROJECT LIMITS	——— – – ———
EXISTING CONTOUR	– – –976– – –
PROPOSED CONTOUR	——(970)——
FLOW ARROW (EXISTING)	→
FLOW ARROW (PROPOSED)	→
SILT FENCE	—\\—\\—\\—\\—\\—
ROCK BERM	◆◆◆
GRAVEL FILTER BAGS	●●●
GRATE INLET PROTECTION	⁘
SEDIMENT CONTROL ROLLS	▩
LIMITS OF DISTURBED AREA	▭
STABILIZED CONSTRUCTION ENTRANCE/EXIT (FIELD LOCATE)	▦
CONSTRUCTION EQUIPMENT, VEHICLE & MATERIALS STORAGE AREA (FIELD LOCATE)	▨
CONCRETE TRUCK WASH–OUT PIT (FIELD LOCATE)	░

GENERAL NOTES

1. DO NOT DISTURB VEGETATED AREAS (TREES, GRASS, WEEDS, BRUSH, ETC.) ANY MORE THAN NECESSARY FOR CONSTRUCTION.

2. CONSTRUCTION ENTRANCE/EXIT LOCATION, CONCRETE WASH–OUT PIT, AND CONSTRUCTION EQUIPMENT AND MATERIAL STORAGE YARD TO BE DETERMINED IN THE FIELD.

3. STORM WATER POLLUTION PREVENTION CONTROLS MAY NEED TO BE MODIFIED IN THE FIELD TO ACCOMPLISH THE DESIRED EFFECT. ALL MODIFICATIONS ARE TO BE NOTED ON THIS EXHIBIT AND SIGNED AND DATED BY THE RESPONSIBLE PARTY.

4. RESTRICT ENTRY/EXIT TO THE PROJECT SITE TO DESIGNATED LOCATIONS BY USE OF ADEQUATE FENCING, IF NECESSARY.

5. ALL STORM WATER POLLUTION PREVENTION CONTROLS ARE TO BE MAINTAINED AND IN WORKING CONDITIONS AT ALL TIMES.

6. FOR A COMPLETE LISTING OF TEMPORARY STORM WATER POLLUTION PREVENTION CONTROLS REFER TO THE TPDES STORM WATER POLLUTION PREVENTION PLAN.

7. STORM WATER POLLUTION PREVENTION STRUCTURES SHOULD BE CONSTRUCTED WITHIN THE SITE BOUNDARIES. SOME OF THESE FEATURES MAY BE SHOWN OUTSIDE THE SITE BOUNDARIES ON THIS PLAN FOR VISUAL CLARITY.

8. AS SOON AS PRACTICAL, ALL DISTURBED SOIL THAT WILL NOT BE COVERED BY IMPERVIOUS COVER SUCH AS PARKWAY AREAS, EASEMENT AREAS, EMBANKMENT SLOPES, ETC. WILL BE STABILIZED PER APPLICABLE PROJECT SPECIFICATIONS.

9. BEST MANAGEMENT PRACTICES MAY BE INSTALLED IN STAGES TO COINCIDE WITH THE DISTURBANCE OF UPGRADIENT AREAS.

10. BEST MANAGEMENT PRACTICES MAY BE REMOVED IN STAGES ONCE THE WATERSHED FOR THAT PORTION CONTROLLED BY THE BEST MANAGEMENT PRACTICES HAS BEEN STABILIZED IN ACCORDANCE WITH TPDES REQUIREMENTS.

11. UPON COMPLETION OF THE PROJECT, INCLUDING SITE STABILIZATION, AND BEFORE FINAL PAYMENT IS ISSUED, CONTRACTOR SHALL REMOVE ALL SEDIMENT AND EROSION CONTROL MEASURES, PAYING SPECIAL ATTENTION TO ROCK BERMS IN DRAINAGE FEATURES.

12. WHERE VEGETATED FILTER STRIPS ARE INDICATED, CONTRACTOR SHALL VERIFY THAT SUFFICIENT VEGETATION EXISTS, OTHERWISE CONTRACTOR SHALL PLACE SILT FENCING IN LIEU OF VEGETATED FILTER STRIP.

13. SHADED AREA ▭ DENOTES LIMITS OF DISTURBED AREAS. OTHER AREAS WITHIN THE PROJECT LIMITS, WITH THE EXCEPTION OF A CONSTRUCTION EQUIPMENT AND MATERIAL STORAGE YARD, ARE NOT A PART OF THIS TPDES STORM WATER POLLUTION PREVENTION PLAN (SWP3) AND WILL NOT BE DISTURBED BY CIVIL CONSTRUCTION ACTIVITIES. HOUSE CONSTRUCTION ACTIVITIES WILL REQUIRE A SEPARATE STORM WATER POLLUTION PREVENTION PLAN.

14. PRIOR TO BEGINNING CONSTRUCTION, CONTRACTOR SHALL COORDINATE PLACEMENT OF TEMPORARY BEST MANAGEMENT PRACTICES WITHIN TXDOT RIGHT–OF–WAY WITH TXDOT.

15. CPS ENERGY WILL FUNCTION AS A SECONDARY OPERATOR ON THIS PROJECT AND WILL BE INSTALLING ELECTRIC UTILITIES FOR ON–SITE CONSTRUCTION AND OFF–SITE FEED TO THE PROJECT.

16. A BEXAR COUNTY ROW PERMIT MUST BE OBTAINED BEFORE WORKING IN ANY BEXAR COUNTY ROW.

SWP3 MODIFICATIONS

DATE	SIGNATURE	DESCRIPTION

THE ENGINEERING SEAL HAS BEEN AFFIXED TO THIS SHEET ONLY FOR THE PURPOSE OF DEMONSTRATING COMPLIANCE WITH THE TPDES–STORM WATER POLLUTION PREVENTION PLAN (SWP3) REGULATIONS.

THIS SHEET HAS BEEN PREPARED FOR PURPOSES OF THE SWP3 ONLY. ALL OTHER CIVIL ENGINEERING RELATED INFORMATION SHOULD BE ACQUIRED FROM THE APPROPRIATE SHEET IN THE CIVIL IMPROVEMENT PLANS.

EXHIBIT 2

NO.	REVISION	DATE

CALEB M. CHANCE
98401

Caleb 8/2/24

PAPE-DAWSON ENGINEERS

2000 NW LOOP 410 I SAN ANTONIO, TX 78213 I 210.375.9000
TEXAS ENGINEERING FIRM #470 I TEXAS SURVEYING FIRM #10028800

STONEHILL UNITS 2B & 6A
SAN ANTONIO, TEXAS

STORM WATER POLLUTION PREVENTION PLAN

PLAT NO. 24-11800312
JOB NO. 12456–13
DATE JULY 2024
DESIGNER RA
CHECKED BL DRAWN EG
SHEET C8.00

Date: Aug 13, 2024, 8:10am User ID: ralvarez
File: P:\124\56\13\Design\Civil\SWPP-1245613.dwg

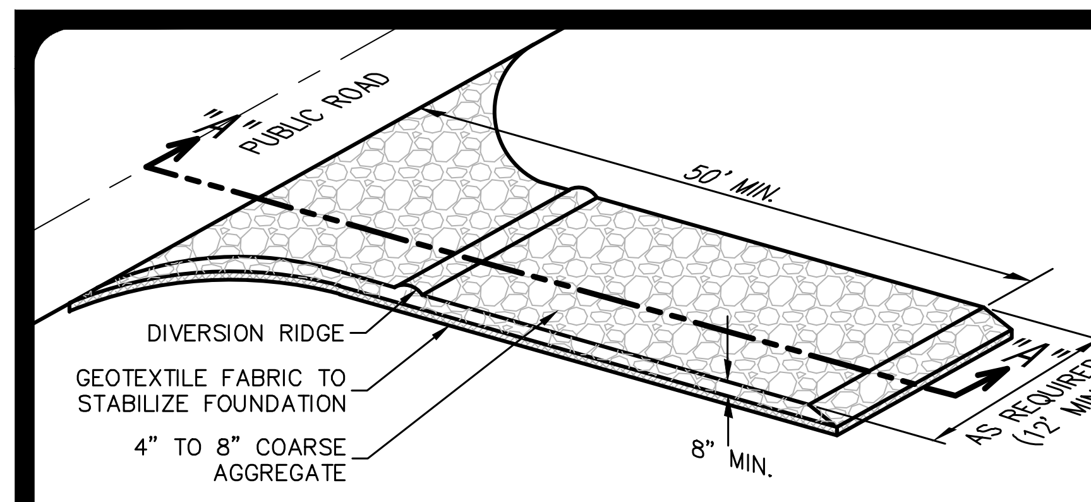

SCHEMATIC OF TEMPORARY CONSTRUCTION ENTRANCE/EXIT

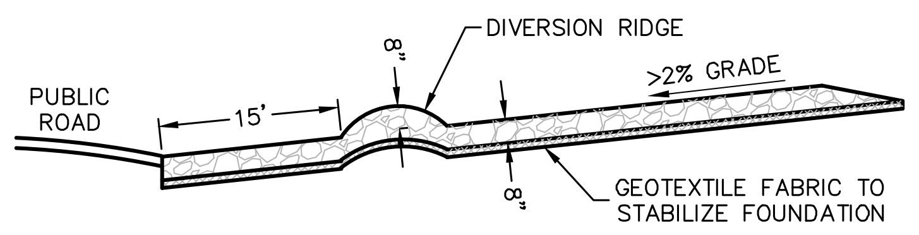

SECTION "A-A" OF A CONSTRUCTION ENTRANCE/EXIT

MATERIALS

1. THE AGGREGATE SHOULD CONSIST OF 4-INCH TO 8-INCH WASHED STONE OVER A STABLE FOUNDATION AS SPECIFIED IN THE PLAN.

2. THE AGGREGATE SHOULD BE PLACED WITH A MINIMUM THICKNESS OF 8-INCHES.

3. THE GEOTEXTILE FABRIC SHOULD BE DESIGNED SPECIFICALLY FOR USE AS A SOIL FILTRATION MEDIA WITH AN APPROXIMATE WEIGHT OF 6 OZ/YD², A MULLEN BURST RATING OF 140 LB/IN², AND AN EQUIVALENT OPENING SIZE GREATER THAN A NUMBER 50 SIEVE.

4. IF A WASHING FACILITY IS REQUIRED, A LEVEL AREA WITH A MINIMUM OF 4-INCH DIAMETER WASHED STONE OR COMMERCIAL ROCK SHOULD BE INCLUDED IN THE PLANS. DIVERT WASTEWATER TO A SEDIMENT TRAP OR BASIN.

INSTALLATION

1. AVOID CURVES ON PUBLIC ROADS AND STEEP SLOPES. REMOVE VEGETATION AND OTHER OBJECTIONABLE MATERIAL FROM THE FOUNDATION AREA. GRADE CROWN FOUNDATION FOR POSITIVE DRAINAGE.

2. THE MINIMUM WIDTH OF THE ENTRANCE/EXIT SHOULD BE 12 FEET OR THE FULL WIDTH OF EXIT ROADWAY, WHICHEVER IS GREATER.

3. THE CONSTRUCTION ENTRANCE SHOULD BE AT LEAST 50 FEET LONG.

4. IF THE SLOPE TOWARD THE ROAD EXCEEDS 2%, CONSTRUCT A RIDGE, 6-INCHES TO 8-INCHES HIGH WITH 3:1 (H:V) SIDE SLOPES, ACROSS THE FOUNDATION APPROXIMATELY 15 FEET FROM THE ENTRANCE TO DIVERT RUNOFF AWAY FROM THE PUBLIC ROAD.

5. PLACE GEOTEXTILE FABRIC AND GRADE FOUNDATION TO IMPROVE STABILITY, ESPECIALLY WHERE WET CONDITIONS ARE ANTICIPATED.

6. PLACE STONE TO DIMENSIONS AND GRADE SHOWN ON PLANS. LEAVE SURFACE SMOOTH AND SLOPE FOR DRAINAGE.

7. DIVERT ALL SURFACE RUNOFF AND DRAINAGE FROM THE STONE PAD TO A SEDIMENT TRAP OR BASIN.

8. INSTALL PIPE UNDER PAD AS NEEDED TO MAINTAIN PROPER PUBLIC ROAD DRAINAGE.

COMMON TROUBLE POINTS

1. INADEQUATE RUNOFF CONTROL-SEDIMENT WASHES ONTO PUBLIC ROAD.

2. STONE TOO SMALL OR GEOTEXTILE FABRIC ABSENT, RESULTS IN MUDDY CONDITION AS STONE IS PRESSED INTO SOIL.

3. PAD TOO SHORT FOR HEAVY CONSTRUCTION TRAFFIC-EXTEND PAD BEYOND THE MINIMUM 50-FOOT LENGTH AS NECESSARY.

4. PAD NOT FLARED SUFFICIENTLY AT ROAD SURFACE, RESULTS IN MUD BEING TRACKED ON TO ROAD AND POSSIBLE DAMAGE TO ROAD.

5. UNSTABLE FOUNDATION – USE GEOTEXTILE FABRIC UNDER PAD AND/OR IMPROVE FOUNDATION DRAINAGE.

INSPECTION AND MAINTENANCE GUIDELINES

1. THE ENTRANCE SHOULD BE MAINTAINED IN A CONDITION, WHICH WILL PREVENT TRACKING OR FLOWING OF SEDIMENT ONTO PUBLIC RIGHTS-OF-WAY. THIS MAY REQUIRE PERIODIC TOP DRESSING WITH ADDITIONAL STONE AS CONDITIONS DEMAND AND REPAIR AND/OR CLEANOUT OF ANY MEASURES USED TO TRAP SEDIMENT.

2. ALL SEDIMENT SPILLED, DROPPED, WASHED OR TRACKED ONTO PUBLIC RIGHTS-OF-WAY SHOULD BE REMOVED IMMEDIATELY BY CONTRACTOR.

3. WHEN NECESSARY, WHEELS SHOULD BE CLEANED TO REMOVE SEDIMENT PRIOR TO ENTRANCE ONTO PUBLIC RIGHT-OF-WAY.

4. WHEN WASHING IS REQUIRED, IT SHOULD BE DONE ON AN AREA STABILIZED WITH CRUSHED STONE THAT DRAINS INTO AN APPROVED SEDIMENT TRAP OR SEDIMENT BASIN.

5. ALL SEDIMENT SHOULD BE PREVENTED FROM ENTERING ANY STORM DRAIN, DITCH OR WATER COURSE BY USING APPROVED METHODS.

STABILIZED CONSTRUCTION ENTRANCE/EXIT DETAIL

NOT-TO-SCALE

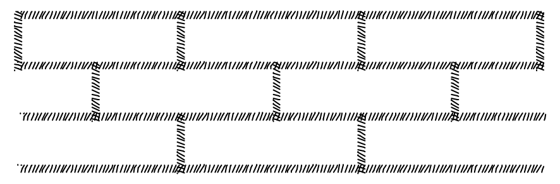

LAY SOD IN A STAGGERED PATTERN. BUTT THE STRIPS TIGHTLY AGAINST EACH OTHER. DO NOT LEAVE SPACES AND DO NOT OVERLAP. A SHARPENED MASON'S TROWEL IS A HANDY TOOL FOR TUCKING DOWN THE ENDS AND TRIMMING PIECES.

BUTTING – ANGLED ENDS CAUSED BY THE AUTOMATIC SOD CUTTER MUST BE MATCHED CORRECTLY.

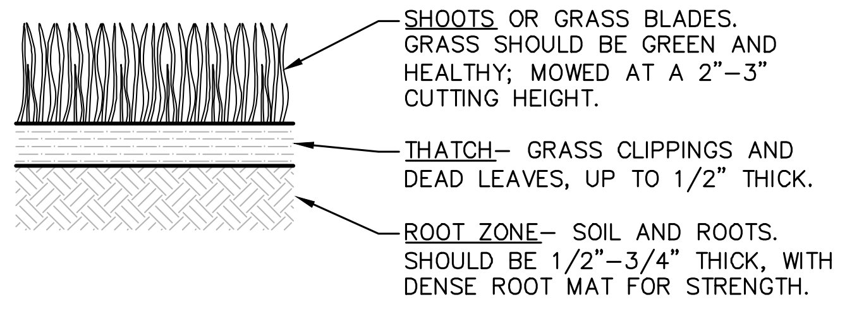
SHOOTS OR GRASS BLADES. GRASS SHOULD BE GREEN AND HEALTHY; MOWED AT A 2"–3" CUTTING HEIGHT.
THATCH– GRASS CLIPPINGS AND DEAD LEAVES, UP TO 1/2" THICK.
ROOT ZONE– SOIL AND ROOTS. SHOULD BE 1/2"–3/4" THICK, WITH DENSE ROOT MAT FOR STRENGTH.

APPEARANCE OF GOOD SOD

NOTES:

1. ROLL SOD IMMEDIATELY TO ACHIEVE FIRM CONTACT WITH THE SOIL.

2. WATER TO A DEPTH OF 4" AS NEEDED. WATER WELL AS SOON AS THE SOD IS LAID.

3. MOW WHEN THE SOD IS ESTABLISHED – IN 2–3 WEEKS. SET THE MOWER HIGH (2"–3").

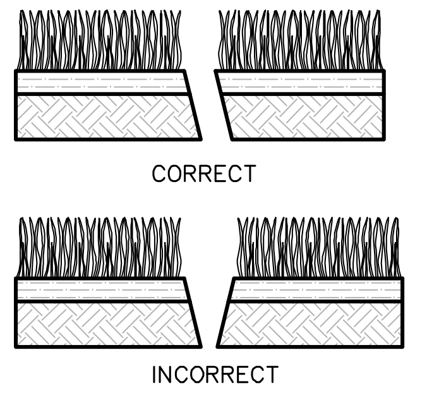

SOD INSTALLATION

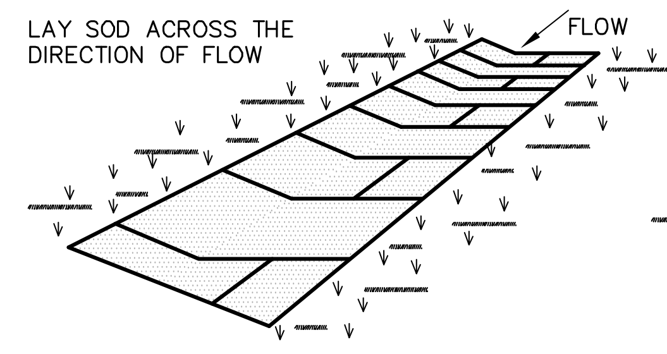

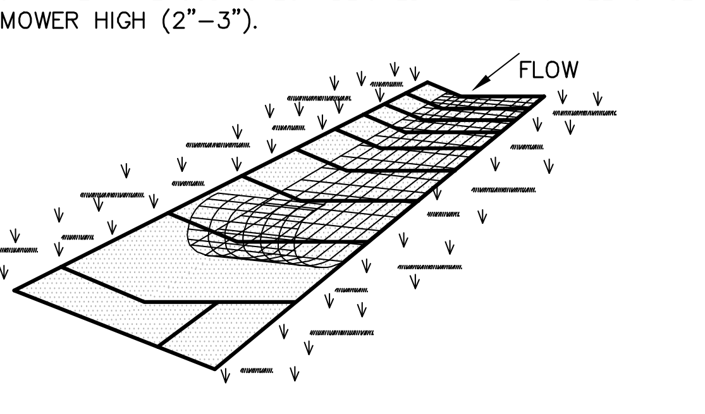

IN CRITICAL AREAS, SECURE SOD WITH NETTING. USE STAPLES.

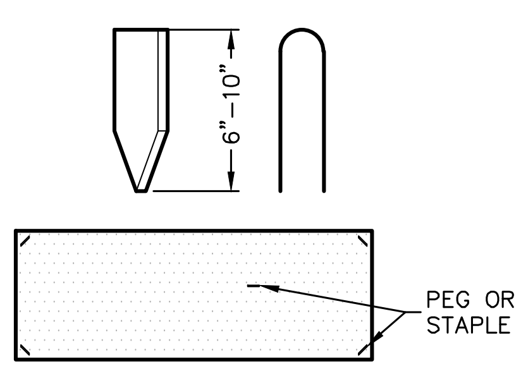

USE PEGS OR STAPLES TO FASTEN SOD FIRMLY – AT THE ENDS OF STRIPS AND IN THE CENTER, OR EVERY 3–4 FEET IF THE STRIPS ARE LONG. WHEN READY TO MOW, DRIVE PEGS OR STAPLES FLUSH WITH THE GROUND.

MATERIALS

1. SOD SHOULD BE MACHINE CUT AT A UNIFORM SOIL THICKNESS OF 3/4" INCH (± 1/4" INCH) AT THE TIME OF CUTTING. THIS THICKNESS SHOULD EXCLUDE SHOOT GROWTH AND THATCH.

2. PIECES OF SOD SHOULD BE CUT TO THE SUPPLIER'S STANDARD WIDTH AND LENGTH, WITH A MAXIMUM ALLOWABLE DEVIATION IN ANY DIMENSION OF 5%. TORN OR UNEVEN PADS SHOULD NOT BE ACCEPTABLE.

3. STANDARD SIZE SECTIONS OF SOD SHOULD BE STRONG ENOUGH TO SUPPORT THEIR OWN WEIGHT AND RETAIN THEIR SIZE AND SHAPE WHEN SUSPENDED FROM A FIRM GRASP ON ONE END OF THE SECTION.

4. SOD SHOULD BE HARVESTED, DELIVERED, AND INSTALLED WITHIN A PERIOD OF 36 HOURS.

SITE PREPARATION

1. PRIOR TO SOIL PREPARATION, AREAS TO BE SODDED SHOULD BE BROUGHT TO FINAL GRADE IN ACCORDANCE WITH THE APPROVED PLAN.

2. THE SURFACE SHOULD BE CLEARED OF ALL TRASH, DEBRIS AND OF ALL ROOTS, BRUSH, WIRE, GRADE STAKES AND OTHER OBJECTS THAT WOULD INTERFERE WITH PLANTING, FERTILIZING OR MAINTENANCE OPERATIONS.

3. FERTILIZE ACCORDING TO SOIL TESTS. FERTILIZER NEEDS CAN BE DETERMINED BY A SOIL TESTING LABORATORY OR REGIONAL RECOMMENDATIONS CAN BE MADE BY COUNTY AGRICULTURAL EXTENSION AGENTS. FERTILIZER SHOULD BE WORKED INTO THE SOIL TO A DEPTH OF 3 INCHES WITH A DISC, SPRINGTOOTH HARROW OR OTHER SUITABLE EQUIPMENT. ON SLOPING LAND, THE FINAL HARROWING OR DISCING OPERATION SHOULD BE ON THE CONTOUR.

INSTALLATION IN CHANNELS

1. SOD STRIPS IN WATERWAYS SHOULD BE LAID PERPENDICULAR TO THE DIRECTION OF FLOW. CARE SHOULD BE TAKEN TO BUTT ENDS OF STRIPS TIGHTLY (SEE FIGURE ABOVE).

2. AFTER ROLLING OR TAMPING, SOD SHOULD BE PEGGED OR STAPLED TO RESIST WASHOUT DURING THE ESTABLISHMENT PERIOD. MESH OR OTHER NETTING MAY BE PEGGED OVER THE SOD FOR EXTRA PROTECTION IN CRITICAL AREAS.

GENERAL INSTALLATION (VA. DEPT. OF CONSERVATION, 1992)

1. SOD SHOULD NOT BE CUT OR LAID IN EXCESSIVELY WET OR DRY WEATHER. SOD ALSO SHOULD NOT BE LAID ON SOIL SURFACES THAT ARE FROZEN.

2. DURING PERIODS OF HIGH TEMPERATURE, THE SOIL SHOULD BE LIGHTLY IRRIGATED IMMEDIATELY PRIOR TO LAYING THE SOD, TO COOL THE SOIL AND REDUCE ROOT BURNING AND DIEBACK.

3. THE FIRST ROW OF SOD SHOULD BE LAID IN A STRAIGHT LINE WITH SUBSEQUENT ROWS PLACED PARALLEL TO AND BUTTING TIGHTLY AGAINST EACH OTHER. LATERAL JOINTS SHOULD BE STAGGERED TO PROMOTE MORE UNIFORM GROWTH AND STRENGTH. CARE SHOULD BE EXERCISED TO ENSURE THAT SOD IS NOT STRETCHED OR OVERLAPPED AND THAT ALL JOINTS ARE BUTTED TIGHT IN ORDER TO PREVENT VOIDS WHICH WOULD CAUSE DRYING OF THE ROOTS (SEE FIGURE ABOVE).

4. ON SLOPES 3:1 OR GREATER, OR WHEREVER EROSION MAY BE A PROBLEM, SOD SHOULD BE LAID WITH STAGGERED JOINTS AND SECURED BY STAPLING OR OTHER APPROVED METHODS. SOD SHOULD BE INSTALLED WITH THE LENGTH PERPENDICULAR TO THE SLOPE (ON CONTOUR).

5. AS SODDING OF CLEARLY DEFINED AREAS IS COMPLETED, SOD SHOULD BE ROLLED OR TAMPED TO PROVIDE FIRM CONTACT BETWEEN ROOTS AND SOIL.

6. AFTER ROLLING, SOD SHOULD BE IRRIGATED TO A DEPTH SUFFICIENT THAT THE UNDERSIDE OF THE SOD PAD AND THE SOIL 4 INCHES BELOW THE SOD IS THOROUGHLY WET.

7. UNTIL SUCH TIME A GOOD ROOT SYSTEM BECOMES DEVELOPED, IN THE ABSENCE OF ADEQUATE RAINFALL, WATERING SHOULD BE PERFORMED AS OFTEN AS NECESSARY TO MAINTAIN MOIST SOIL TO A DEPTH OF AT LEAST 4 INCHES.

8. THE FIRST MOWING SHOULD NOT BE ATTEMPTED UNTIL THE SOD IS FIRMLY ROOTED, USUALLY 2–3 WEEKS. NOT MORE THAN ONE THIRD OF THE GRASS LEAF SHOULD BE REMOVED AT ANY ONE CUTTING.

INSPECTION AND MAINTENANCE GUIDELINES

1. SOD SHOULD BE INSPECTED WEEKLY AND AFTER EACH RAIN EVENT TO LOCATE AND REPAIR ANY DAMAGE.

2. DAMAGE FROM STORMS OR NORMAL CONSTRUCTION ACTIVITIES SUCH AS TIRE RUTS OR DISTURBANCE OF SWALE STABILIZATION SHOULD BE REPAIRED AS SOON AS PRACTICAL.

SOD INSTALLATION DETAIL

NOT-TO-SCALE

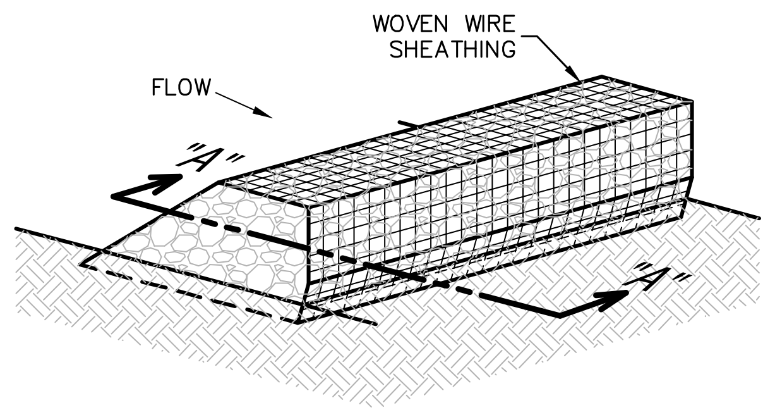

ISOMETRIC PLAN VIEW

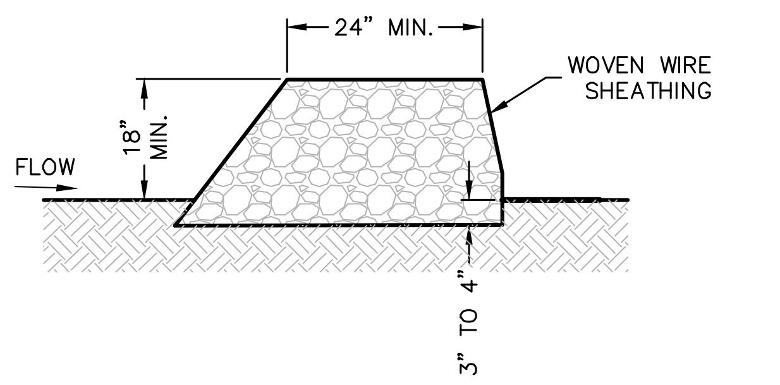

SECTION "A-A"

ROCK BERMS

THE PURPOSE OF A ROCK BERM IS TO SERVE AS A CHECK DAM IN AREAS OF CONCENTRATED FLOW, TO INTERCEPT SEDIMENT-LADEN RUNOFF, DETAIN THE SEDIMENT AND RELEASE THE WATER IN SHEET FLOW. THE ROCK BERM SHOULD BE USED WHEN THE CONTRIBUTING DRAINAGE AREA IS LESS THAN 5 ACRES. ROCK BERMS ARE USED IN AREAS WHERE THE VOLUME OF RUNOFF IS TOO GREAT FOR A SILT FENCE TO CONTAIN. THEY ARE LESS EFFECTIVE FOR SEDIMENT REMOVAL THAN SILT FENCES, PARTICULARLY FOR FINE PARTICLES, BUT ARE ABLE TO WITHSTAND HIGHER FLOWS THAN A SILT FENCE. AS SUCH, ROCK BERMS ARE OFTEN USED IN AREAS OF CHANNEL FLOWS (DITCHES, GULLIES, ETC.). ROCK BERMS ARE MOST EFFECTIVE AT REDUCING BED LOAD IN CHANNELS AND SHOULD NOT BE SUBSTITUTED FOR OTHER EROSION AND SEDIMENT CONTROL MEASURES FARTHER UP THE WATERSHED.

INSPECTION AND MAINTENANCE GUIDELINES

1. INSPECTION SHOULD BE MADE WEEKLY AND AFTER EACH RAINFALL BY THE RESPONSIBLE PARTY. FOR INSTALLATIONS IN STREAMBEDS, ADDITIONAL DAILY INSPECTIONS SHOULD BE MADE.

2. REMOVE SEDIMENT AND OTHER DEBRIS WHEN BUILDUP REACHES 6 INCHES AND DISPOSE OF THE ACCUMULATED SILT IN AN APPROVED MANNER THAT WILL NOT CAUSE ANY ADDITIONAL SILTATION.

3. REPAIR ANY LOOSE WIRE SHEATHING.

4. THE BERM SHOULD BE RESHAPED AS NEEDED DURING INSPECTION.

5. THE BERM SHOULD BE REPLACED WHEN THE STRUCTURE CEASES TO FUNCTION AS INTENDED DUE TO SILT ACCUMULATION AMONG THE ROCKS, WASHOUT, CONSTRUCTION TRAFFIC DAMAGE, ETC.

6. THE ROCK BERM SHOULD BE LEFT IN PLACE UNTIL ALL UPSTREAM AREAS ARE STABILIZED AND ACCUMULATED SILT REMOVED.

MATERIALS

1. THE BERM STRUCTURE SHOULD BE SECURED WITH A WOVEN WIRE SHEATHING HAVING MAXIMUM OPENING OF 1 INCH AND A MINIMUM WIRE DIAMETER OF 20 GAUGE GALVANIZED AND SHOULD BE SECURED WITH SHOAT RINGS.

2. CLEAN, OPEN GRADED 3-INCH TO 5-INCH DIAMETER ROCK SHOULD BE USED, EXCEPT IN AREAS WHERE HIGH VELOCITIES OR LARGE VOLUMES OF FLOW ARE EXPECTED, WHERE 5-INCH TO 8-INCH DIAMETER ROCKS MAY BE USED.

INSTALLATION

1. LAY OUT THE WOVEN WIRE SHEATHING PERPENDICULAR TO THE FLOW LINE. THE SHEATHING SHOULD BE 20 GAUGE WOVEN WIRE MESH WITH 1 INCH OPENINGS.

2. BERM SHOULD HAVE A TOP WIDTH OF 2 FEET MINIMUM WITH SIDE SLOPES BEING 2:1 (H:V) OR FLATTER.

3. PLACE THE ROCK ALONG THE SHEATHING AS SHOWN IN THE DIAGRAM TO A HEIGHT NOT LESS THAN 18".

4. WRAP THE WIRE SHEATHING AROUND THE ROCK AND SECURE WITH TIE WIRE SO THAT THE ENDS OF THE SHEATHING OVERLAP AT LEAST 2 INCHES, AND THE BERM RETAINS ITS SHAPE WHEN WALKED UPON.

5. BERM SHOULD BE BUILT ALONG THE CONTOUR AT ZERO PERCENT GRADE OR AS NEAR AS POSSIBLE.

6. THE ENDS OF THE BERM SHOULD BE TIED INTO EXISTING UPSLOPE GRADE AND THE BERM SHOULD BE BURIED IN A TRENCH APPROXIMATELY 3 TO 4 INCHES DEEP TO PREVENT FAILURE OF THE CONTROL.

COMMON TROUBLE POINTS

1. INSUFFICIENT BERM HEIGHT OR LENGTH (RUNOFF QUICKLY ESCAPES OVER THE TOP OR AROUND THE SIDES OF BERM).

2. BERM NOT INSTALLED PERPENDICULAR TO FLOW LINE (RUNOFF ESCAPING AROUND ONE SIDE).

ROCK BERM DETAIL

NOT-TO-SCALE

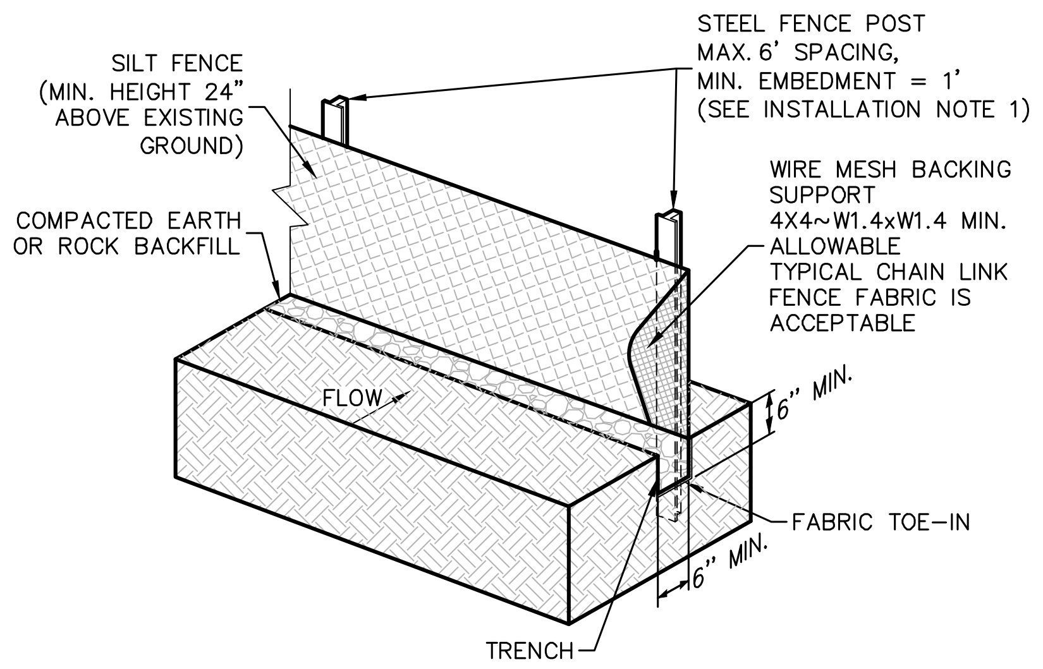
SILT FENCE (MIN. HEIGHT 24" ABOVE EXISTING GROUND)
STEEL FENCE POST MAX. 6' SPACING, MIN. EMBEDMENT = 1' (SEE INSTALLATION NOTE 1)
WIRE MESH BACKING SUPPORT 4X4~W1.4xW1.4 MIN. ALLOWABLE TYPICAL CHAIN LINK FENCE FABRIC IS ACCEPTABLE
COMPACTED EARTH OR ROCK BACKFILL
FLOW
6" MIN.
FABRIC TOE–IN
6" MIN.
TRENCH

ISOMETRIC PLAN VIEW

SILT FENCE

A SILT FENCE IS A BARRIER CONSISTING OF GEOTEXTILE FABRIC SUPPORTED BY METAL POSTS TO PREVENT SOIL AND SEDIMENT LOSS FROM A SITE. WHEN PROPERLY USED, SILT FENCES CAN BE HIGHLY EFFECTIVE AT CONTROLLING SEDIMENT FROM DISTURBED AREAS. THEY CAUSE RUNOFF TO POND, ALLOWING HEAVIER SOLIDS TO SETTLE OUT. IF NOT PROPERLY INSTALLED, SILT FENCES ARE NOT LIKELY TO BE EFFECTIVE.

THE PURPOSE OF A SILT FENCE IS TO INTERCEPT AND DETAIN WATER-BORN SEDIMENT FROM UNPROTECTED AREAS OF A LIMITED EXTENT. SILT FENCE IS USED DURING THE PERIOD OF CONSTRUCTION NEAR THE PERIMETER OF A DISTURBED AREA TO INTERCEPT SEDIMENT WHILE ALLOWING WATER TO PERCOLATE THROUGH. THIS FENCE SHOULD REMAIN IN PLACE UNTIL THE DISTURBED AREA IS PERMANENTLY STABILIZED. SILT FENCE SHOULD NOT BE USED WHERE THERE IS A CONCENTRATION OF WATER IN A CHANNEL OR DRAINAGE WAY. IF CONCENTRATED FLOW OCCURS AFTER INSTALLATION, CORRECTIVE ACTION MUST BE TAKEN SUCH AS PLACING A ROCK BERM IN THE AREAS OF CONCENTRATED FLOW.

SILT FENCING WITHIN THE SITE MAY BE TEMPORARILY MOVED DURING THE DAY TO ALLOW CONSTRUCTION ACTIVITY PROVIDED IT IS REPLACED AND PROPERLY ANCHORED TO THE GROUND AT THE END OF THE DAY. SILT FENCES ON THE PERIMETER OF THE SITE OR AROUND DRAINAGE WAYS SHOULD NOT BE MOVED AT ANY TIME.

MATERIALS

1. SILT FENCE MATERIAL SHOULD BE POLYPROPYLENE, POLYETHYLENE, OR POLYAMIDE WOVEN OR NONWOVEN FABRIC. THE FABRIC SHOULD BE 36 INCHES, WITH A MINIMUM UNIT WEIGHT OF 4.5 OZ/YD, MULLEN BURST STRENGTH EXCEEDING 190 LB/IN2, ULTRAVIOLET STABILITY EXCEEDING 70%, AND MINIMUM APPARENT OPENING SIZE OF U.S. SIEVE NUMBER 30.

2. FENCE POSTS SHOULD BE MADE OF HOT ROLLED STEEL, AT LEAST 4 FEET LONG WITH TEE OR Y-BAR CROSS SECTION, SURFACE PAINTED OR GALVANIZED, MINIMUM WEIGHT 1.25 LB/FT, AND BRINDELL HARDNESS EXCEEDING 140.

3. WOVEN WIRE BACKING TO SUPPORT THE FABRIC SHOULD BE GALVANIZED 2" X 4" WELDED WIRE, 12 GAUGE MINIMUM.

INSTALLATION

1. STEEL POSTS, WHICH SUPPORT THE SILT FENCE, SHOULD BE INSTALLED ON A SLIGHT ANGLE TOWARD THE ANTICIPATED RUNOFF SOURCE. POSTS MUST BE EMBEDDED A MINIMUM OF 1-FOOT DEEP AND SPACED NOT MORE THAN 8 FEET ON CENTER. WHERE WATER CONCENTRATES, THE MAXIMUM SPACING SHOULD BE 6 FEET.

2. LAY OUT FENCING DOWN-SLOPE OF DISTURBED AREA, FOLLOWING THE CONTOUR AS CLOSELY AS POSSIBLE. THE FENCE SHOULD BE SITED SO THAT THE MAXIMUM DRAINAGE AREA IS ¼ ACRE/100 FEET OF FENCE.

3. THE TOE OF THE SILT FENCE SHOULD BE TRENCHED IN WITH A SPADE OR MECHANICAL TRENCHER, SO THAT THE DOWN-SLOPE FACE OF THE TRENCH IS FLAT AND PERPENDICULAR TO THE LINE OF FLOW. WHERE FENCE CANNOT BE TRENCHED IN (E.G., PAVEMENT OR ROCK OUTCROP), WEIGHT FABRIC FLAP WITH 3 INCHES OF PEA GRAVEL ON UPHILL SIDE TO PREVENT FLOW FROM SEEPING UNDER FENCE.

4. THE TRENCH MUST BE A MINIMUM OF 6 INCHES DEEP AND 6 INCHES WIDE TO ALLOW FOR THE SILT FENCE FABRIC TO BE LAID IN THE GROUND AND BACKFILLED WITH COMPACTED MATERIAL.

5. SILT FENCE SHOULD BE SECURELY FASTENED TO EACH STEEL SUPPORT POST OR TO WOVEN WIRE, WHICH IS IN TURN ATTACHED TO THE STEEL FENCE POST. THERE SHOULD BE A 3-FOOT OVERLAP, SECURELY FASTENED WHERE ENDS OF FABRIC MEET.

6. SILT FENCE SHOULD BE REMOVED WHEN THE SITE IS COMPLETELY STABILIZED SO AS NOT TO BLOCK OR IMPEDE STORM FLOW OR DRAINAGE.

COMMON TROUBLE POINTS

1. FENCE NOT INSTALLED ALONG THE CONTOUR CAUSING WATER TO CONCENTRATE AND FLOW OVER THE FENCE.

2. FABRIC NOT SEATED SECURELY TO GROUND (RUNOFF PASSING UNDER FENCE).

3. FENCE NOT INSTALLED PERPENDICULAR TO FLOW LINE (RUNOFF ESCAPING AROUND SIDES).

4. FENCE TREATING TOO LARGE AN AREA, OR EXCESSIVE CHANNEL FLOW (RUNOFF OVERTOPS OR COLLAPSES FENCE).

INSPECTION AND MAINTENANCE GUIDELINES

1. INSPECT ALL FENCING WEEKLY, AND AFTER RAINFALL.

2. REMOVE SEDIMENT WHEN BUILDUP REACHES 6 INCHES.

3. REPLACE TORN FABRIC OR INSTALL A SECOND LINE OF FENCING PARALLEL TO THE TORN SECTION.

4. REPLACE OR REPAIR SECTIONS CRUSHED OR COLLAPSED IN THE COURSE OF CONSTRUCTION ACTIVITY. IF A SECTION OF FENCE IS OBSTRUCTING VEHICULAR ACCESS, CONSIDER RELOCATING IT TO A SPOT WHERE IT WILL PROVIDE EQUAL PROTECTION, BUT WILL NOT OBSTRUCT VEHICLES. A TRIANGULAR FILTER DIKE MAY BE PREFERABLE TO A SILT FENCE AT COMMON VEHICLE ACCESS POINTS.

5. WHEN CONSTRUCTION IS COMPLETE, THE SEDIMENT SHOULD BE DISPOSED OF IN A MANNER THAT WILL NOT CAUSE ADDITIONAL SILTATION AND THE PRIOR LOCATION OF THE SILT FENCE SHOULD BE REVEGETATED. THE FENCE ITSELF SHOULD BE DISPOSED OF IN AN APPROVED LANDFILL.

SILT FENCE DETAIL

NOT-TO-SCALE

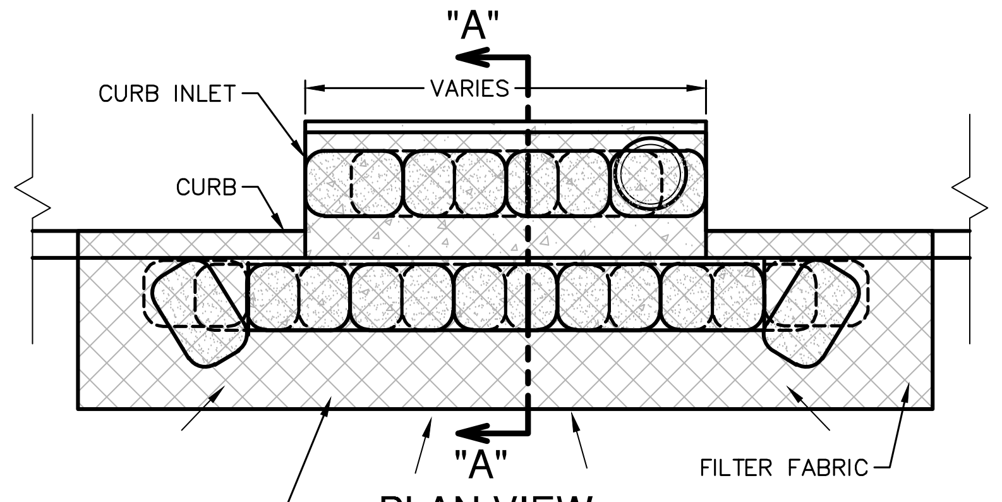

PLAN VIEW

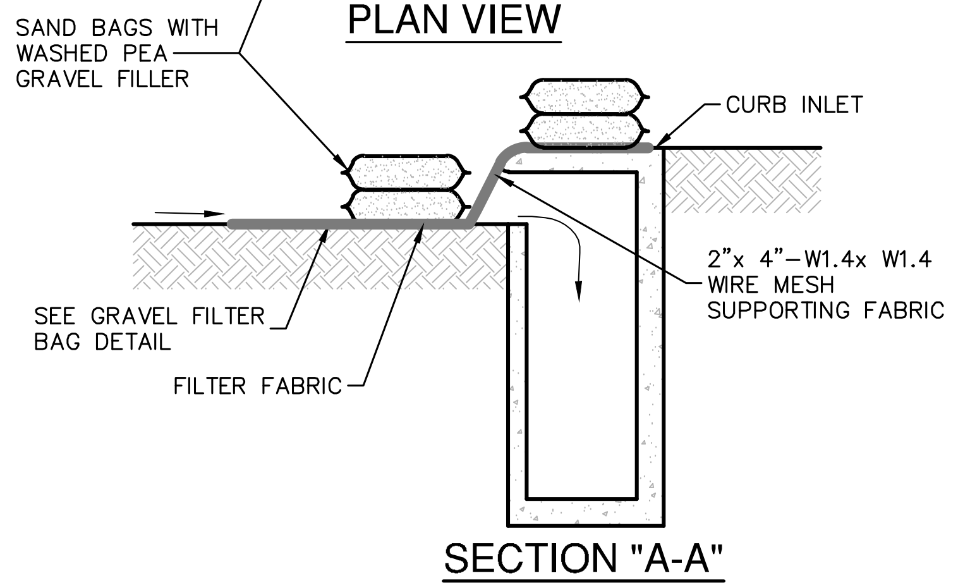
SAND BAGS WITH WASHED PEA GRAVEL FILLER
CURB INLET
2"x 4"–W1.4x W1.4 WIRE MESH SUPPORTING FABRIC
SEE GRAVEL FILTER BAG DETAIL
FILTER FABRIC

SECTION "A-A"

GENERAL NOTES

1. CONTRACTOR TO INSTALL 2"x4"–W1.4xW1.4 WIRE MESH SUPPORTING FILTER FABRIC OVER THE INLET OPENING. FABRIC MUST BE SECURED TO WIRE BACKING WITH CLIPS OR WIRE TIES AT THIS LOCATION. SAND BAGS FILLED WITH WASHED PEA GRAVEL SHOULD BE PLACED ON TOP OF WIRE MESH ON TOP OF THE INLET AS SHOWN ON THIS DETAIL TO HOLD WIRE MESH IN PLACE. SANDBAGS FILLED WITH WASHED PEA GRAVEL SHOULD ALSO BE PLACED ALONG THE GUTTER AS SHOWN ON THIS DETAIL TO HOLD WIRE MESH IN PLACE. SAND BAGS TO BE STACKED TO FORM A CONTINUOUS BARRIER AROUND INLETS.

2. THE BAGS SHOULD BE TIGHTLY ABUTTED AGAINST EACH OTHER TO PREVENT RUNOFF FROM FLOWING BETWEEN THE BAGS.

INSPECTION AND MAINTENANCE GUIDELINES

1. INSPECTION SHOULD BE MADE WEEKLY AND AFTER EACH RAINFALL. REPAIR OR REPLACEMENT SHOULD BE MADE PROMPTLY AS NEEDED BY THE CONTRACTOR.

2. REMOVE SEDIMENT WHEN BUILDUP REACHES A DEPTH OF 3 INCHES. REMOVED SEDIMENT SHOULD BE DEPOSITED IN A SUITABLE AREA AND IN SUCH A MANNER THAT IT WILL NOT ERODE.

3. CHECK PLACEMENT OF DEVICE TO PREVENT GAPS BETWEEN DEVICE AND CURB.

4. INSPECT FILTER FABRIC AND PATCH OR REPLACE IF TORN OR MISSING.

5. STRUCTURES SHOULD BE REMOVED AND THE AREA STABILIZED ONLY AFTER THE REMAINING DRAINAGE AREA HAS BEEN PROPERLY STABILIZED.

BAGGED GRAVEL CURB INLET PROTECTION DETAIL

NOT-TO-SCALE

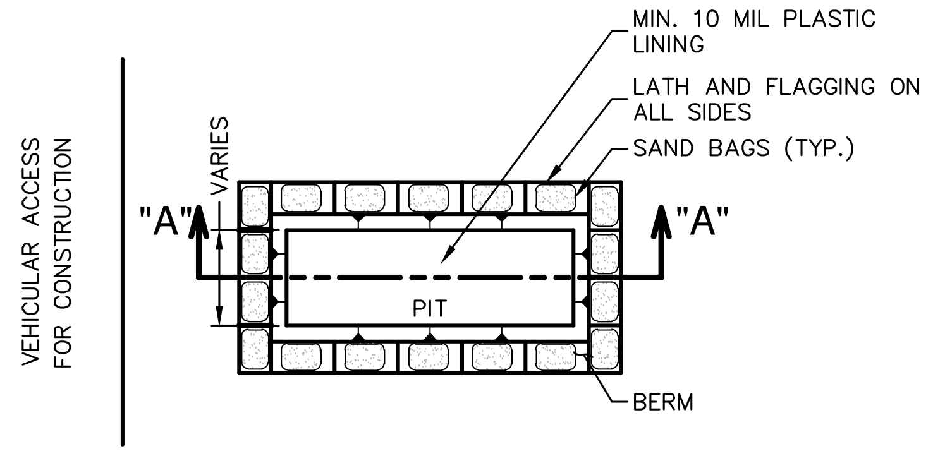
MIN. 10 MIL PLASTIC LINING
LATH AND FLAGGING ON ALL SIDES
SAND BAGS (TYP.)
VEHICULAR ACCESS FOR CONSTRUCTION
VARIES
"A"
"A"
PIT
BERM

PLAN VIEW

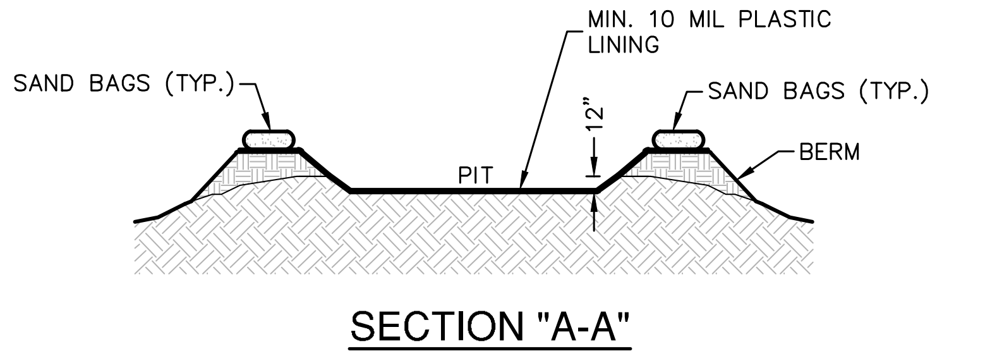

SECTION "A-A"

GENERAL NOTES

1. DETAIL ABOVE ILLUSTRATES MINIMUM DIMENSIONS. PIT CAN BE INCREASED IN SIZE DEPENDING ON EXPECTED FREQUENCY OF USE.

2. WASHOUT PIT SHALL BE LOCATED IN AN AREA EASILY ACCESSIBLE TO CONSTRUCTION TRAFFIC.

3. WASHOUT PIT SHALL NOT BE LOCATED IN AREAS SUBJECT TO INUNDATION FROM STORM WATER RUNOFF.

4. LOCATE WASHOUT AREA AT LEAST 50 FEET FROM SENSITIVE FEATURES, STORM DRAINS, OPEN DITCHES OR WATER BODIES.

5. TEMPORARY CONCRETE WASHOUT FACILITY SHOULD BE CONSTRUCTED WITH SUFFICIENT QUANTITY AND VOLUME TO CONTAIN ALL LIQUID AND CONCRETE WASTE GENERATED BY WASHOUT OPERATIONS.

MATERIALS

PLASTIC LINING MATERIAL SHOULD BE A MINIMUM OF 10 MIL IN POLYETHYLENE SHEETING AND SHOULD BE FREE OF HOLES, TEARS, OR OTHER DEFECTS THAT COMPROMISE THE IMPERMEABILITY OF THE MATERIAL.

MAINTENANCE

1. WHEN TEMPORARY CONCRETE WASHOUT FACILITIES ARE NO LONGER REQUIRED FOR THE WORK, THE HARDENED CONCRETE SHOULD BE REMOVED AND DISPOSED OF.

2. MATERIALS USED TO CONSTRUCT TEMPORARY CONCRETE WASHOUT FACILITIES SHOULD BE REMOVED FROM THE SITE OF THE WORK AND DISPOSED OF.

3. HOLES, DEPRESSIONS OR OTHER GROUND DISTURBANCES CAUSED BY THE REMOVAL OF THE TEMPORARY CONCRETE WASHOUT FACILITIES SHOULD BE BACKFILLED AND REPAIRED.

CONCRETE TRUCK WASHOUT PIT DETAIL

NOT-TO-SCALE

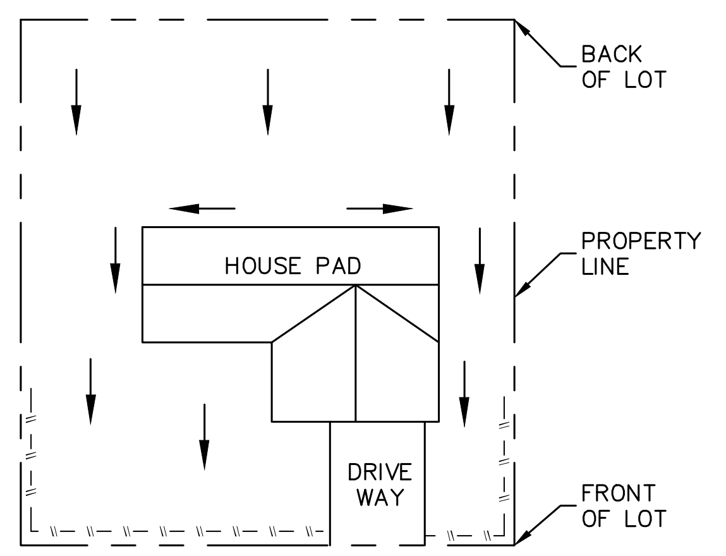

LOT TYPE-A

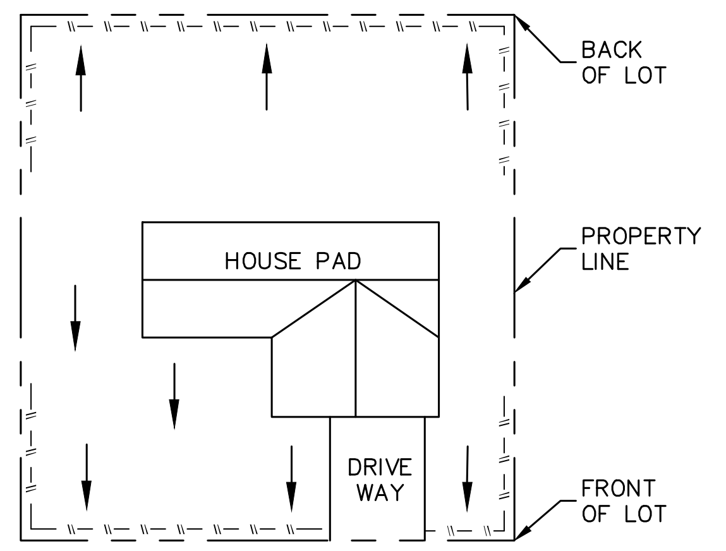

LOT TYPE-B

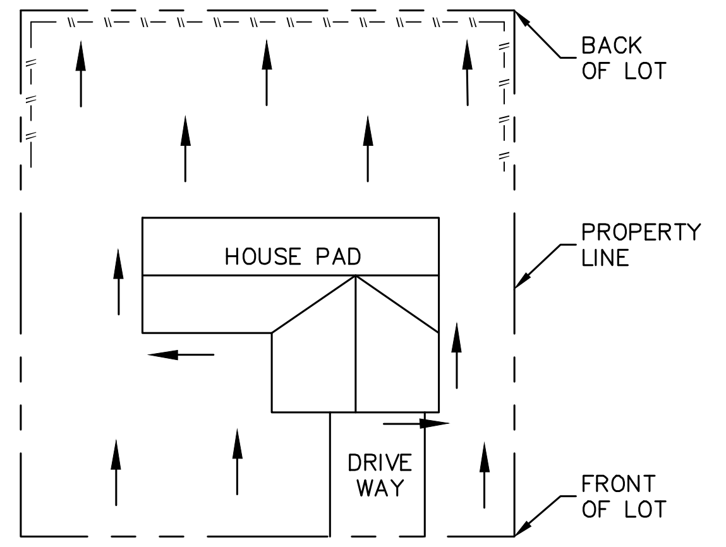

LOT TYPE-C

NOTE: SILT FENCE TO BE INSTALLED PER THESE DETAILS AND LOCATED ON THE DOWNGRADIENT SIDE OF EACH LOT LINE OR LIMITS OF CLEARING AS GENERALLY SHOWN ON THE OVERALL SITE PLAN.

LEGEND

—\\ —\\ —\\ —	SILT FENCE
←	DRAINAGE FLOW

TYPICAL HOUSE LOT LAYOUTS

NOT-TO-SCALE

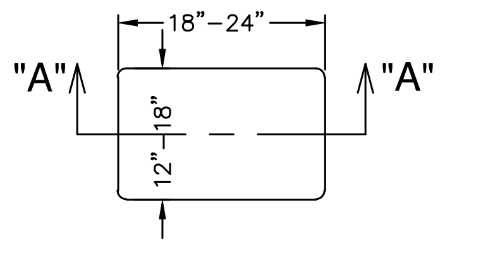

PLAN VIEW

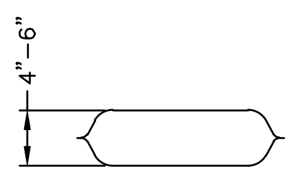

SECTION "A-A"

NOTES:

1. THE FILTER BAG MATERIAL SHALL BE MADE OF POLYPROPYLENE, POLYETHYLENE OR POLYAMIDE WOVEN FABRIC, MIN. UNIT WEIGHT OF 4 OUNCES/SY, HAVE A MULLEN BURST STRENGTH EXCEEDING 300 PSI AND ULTRAVIOLET STABILITY EXCEEDING 70%.

2. THE FILTER BAG SHALL BE FILLED WITH CLEAN, MEDIUM WASHED PEA GRAVEL TO COARSE GRAVEL (0.31 TO 0.75 INCH DIAMETER).

3. SAND SHALL NOT BE USED TO FILL THE FILTER BAGS.

GRAVEL FILTER BAG DETAIL

NOT-TO-SCALE

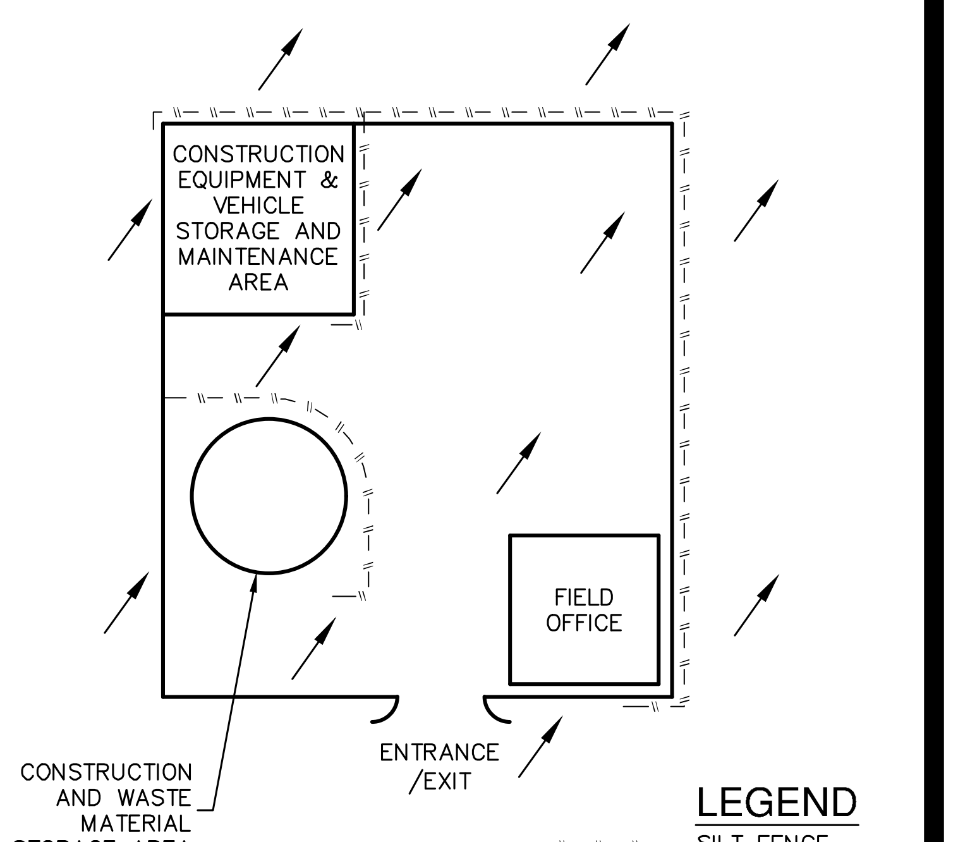
CONSTRUCTION EQUIPMENT & VEHICLE STORAGE AND MAINTENANCE AREA
FIELD OFFICE
CONSTRUCTION AND WASTE MATERIAL STORAGE AREA
ENTRANCE /EXIT

LEGEND

—\\ —\\ —\\ —	SILT FENCE
←	FLOW ARROWS

CONSTRUCTION STAGING AREA

NOT-TO-SCALE

THE ENGINEERING SEAL HAS BEEN AFFIXED TO THIS SHEET ONLY FOR THE PURPOSE OF DEMONSTRATING COMPLIANCE WITH THE TPDES-STORM WATER POLLUTION PREVENTION PLAN (SWP3) REGULATIONS.

THIS SHEET HAS BEEN PREPARED FOR PURPOSES OF THE SWP3 ONLY. ALL OTHER CIVIL ENGINEERING RELATED INFORMATION SHOULD BE ACQUIRED FROM THE APPROPRIATE SHEET IN THE CIVIL IMPROVEMENT PLANS.

EXHIBIT 3

NO.	REVISION	DATE

CALEB M. CHANCE
98401

Caleb
8/2/24

PAPE-DAWSON ENGINEERS

2000 NW LOOP 410 I SAN ANTONIO, TX 78213 I 210.375.9000
TEXAS ENGINEERING FIRM #470 I TEXAS SURVEYING FIRM #10028800

STONEHILL UNITS 2B & 6A

SAN ANTONIO, TEXAS

STORM WATER POLLUTION PREVENTION PLAN DETAILS

PLAT NO. 24-11800312
JOB NO. 12456–13
DATE JULY 2024
DESIGNER RA
CHECKED BL DRAWN RA
SHEET C8.10

Date: Aug 13, 2024, 8:10am User ID: ralvarez
File: P:\124\56\13\Design\Civil\SWDT-1245613.dwg