SH 211 AT LAMBDA DRIVE

BEXAR COUNTY, TEXAS

TRAFFIC SIGNAL MODIFICATION

DESIGN SPEED: SH 211 = 55 MPH
LAMBDA DRIVE = 30 MPH
YEAR 2021 TWO-WAY ADT = 18,408

INDEX OF SHEETS

SHEET NO.	DESCRIPTION
	GENERAL
1	TITLE SHEET
2-7	GENERAL NOTES
8	SUMMARY OF QUANTITIES
	TRAFFIC PLAN
9	EXISTING CONDITION & REMOVALS
10	TRAFFIC SIGNAL LAYOUT
11	TRAFFIC SIGNAL DETAILS
12	SIGNING AND PAVEMENT MARKING LAYOUT
	TRAFFIC STANDARDS
13	* ED (1)-14
14	* ED (3)-14
15	* ED (4)-14
16	* ED (8)-14
17	* TS-BP-20
18	* RADAR PLACEMENT (SAT)
19-21	* PM (1-3)-20
22-23	* TSR (3-4)-13
24	* SMD(GEN)-08
25-27	* SLIP (1-3)-08
	TRAFFIC CONTROL
28-39	* BC (1-12)-21
40-41	* WZ(BTS 1-2)-13
	ENVIRONMENTAL
42-43	* SWP3 (Less Than 1 Acre)
44-46	* EC(9)-16

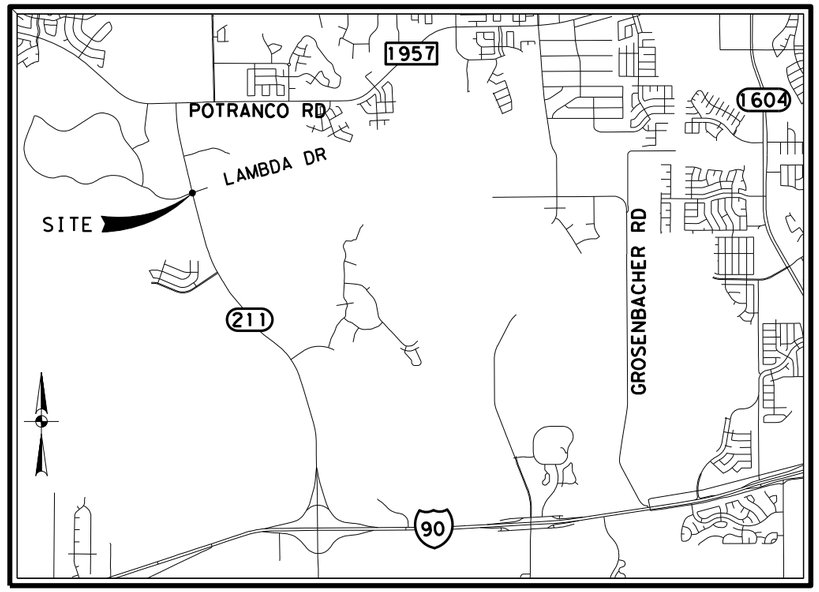

LOCATION MAP
NOT-TO-SCALE

THE STANDARD SHEETS SPECIFICALLY SHOWN WITH PRECEDING (*), HAVE BEEN SELECTED BY ME OR UNDER MY RESPONSIBLE SUPERVISION AS BEING APPLICABLE TO THIS PROJECT.

STATE OF TEXAS
GILMER D. GASTON
80472
LICENSED
PROFESSIONAL ENGINEER

GILMER D. GASTON, P.E. — 12/6/2022 DATE

KB HOME - SAN ANTONIO
4800 FREDERICKSBURG RD.
SAN ANTONIO, TEXAS 78229

DECEMBER 2022

PAPE-DAWSON ENGINEERS
SAN ANTONIO I AUSTIN I HOUSTON I FORT WORTH I DALLAS
2000 NW LOOP 410 I SAN ANTONIO, TX 78213 I 210.375.9000
TEXAS ENGINEERING FIRM #470 I TEXAS SURVEYING FIRM #10028800

SH 211 AT LAMBDA DRIVE

TITLE SHEET

DGN:	FED. RD. DIV. NO.	STATE	FEDERAL AID PROJECT NO.			HIGHWAY NO.
CHK DGN:	6	TEXAS				SH0211
DWG:	DIST.	COUNTY	CONT. NO.	SECT. NO.	JOB NO.	SHEET NO.
CHK DWG:	SAT	BEXAR	3544	04		1

Plotted on: 12/6/2022
Design Filename: P:\89\46\24\Design\Transpo\General\894624_TITLE.dgn

**********GENERAL NOTES**********
2014 Specification Book (Revised August 4, 2022)

The scope of this work assigned under this contract will include traffic signal modifications.

The quantities included in this project proposal are only to be used in the determination of the low bidder. They are not to be used in determining the quantity of materials to be ordered for work under this contract.

Prior to beginning activities required under each work order, the contractor shall attend a "pre-work meeting" with TxDOT representatives. This meeting will be arranged by TxDOT and is intended to provide the contractor with an outline of the proposed work procedures and discuss plans for performing the work in a manner that will provide for the safe passage of traffic at all times.

All work will be performed in accordance to the standards and specifications found in these plans or as directed by the Engineer.

The following list of some of the telephone numbers of the utility locators for various utilities that may be encountered.

City Public Service	978-3500
Southwestern Bell Telephone	1-800-828-5127
Time Warner Cable System	352-4672
San Antonio Water System	704-7297 or 227-6143
Bexar Metropolitan Water	354-6527
Valero Gas	349-7555
AT & T	1-800-252-1133
One Call Utility Locators	1-800-545-600

In preparing holes for posts and/or foundations, the contractor shall exercise care to not rupture existing drainage structures, electrical conduits, public utilities, etc.

Sign types for which details are not shown in the plans shall conform to the "Texas MUTCD".

Contractor shall submit daily work reports at the end of each day's operation.

The Contractor shall use materials from pre-qualified producers as indicated on the material producers list maintained by the Construction Division (CST) of the Texas Department of Transportation (TxDOT).

Control: 3544-04 **Sheet**

County: Bexar

Highway: SH0211

--General--

G-2 Contact the Engineer or the City when construction operations are within 400 feet of a signalized intersection to determine/verify the location of loop detectors, conduit, ground-boxes, etc. Repair or replace any signal equipment damaged by construction operations. The method of repair or replacement shall be pre-approved and inspected. Depending on the type and extent of the damage, the Engineer reserves the right to perform the repair or replacement work and the Contractor will be billed for this work.

City of San Antonio: (210) 207-8642
City of New Braunfels: (830) 221-4049

G-3 Any materials removed and not reused and determined to be salvageable shall be stored within the project limits at an approved location or delivered undamaged to the storage yard as directed. Deface traffic signs so that they will not reappear in public as signs.

G-4 Any sign panels that are adjusted or removed and replaced, shall be done the same workday unless otherwise approved. This work shall be considered subsidiary to Item 502.

G-5 Notify the Engineer at least two weeks prior to a proposed traffic pattern change(s) that will require a revision to traffic signals.

G-8 Hurricane Evacuation

Hurricane Season is from June 1 thru November 30. As the closest metropolitan city inland from the Texas Coast, the City of San Antonio is a major shelter destination during mandatory hurricane evacuations. As such, planned work zone lane or road closures may be restricted and/or suspended during mandatory hurricane evacuation operations. The District will coordinate these restrictions at a minimum H-120 from any projected impact to the Texas Coast.

No time charges will be made if the Engineer determines that work on the project was impacted by the hurricane.

The Engineer may order changes in the Traffic Control Plan to accommodate evacuation traffic, and may suspend the work, all or in part, to ensure timely completion of this work. All work to implement changes in the Traffic Control Plan will be paid through existing bid prices or through Item 9.5, Force Account. However, the Department will not entertain any request for delay damages, loss of efficiency that may be attributed to the restriction or suspension of road or lane closures, or to changes in the Traffic Control Plan.

G-12 Submit locate request for SAWS water and sewer to TXDOTlocates@saws.org.

REV. NO.	DATE	DESCRIPTION	BY

PAPE-DAWSON ENGINEERS
SAN ANTONIO I AUSTIN I HOUSTON I FORT WORTH I DALLAS
2000 NW LOOP 410 I SAN ANTONIO, TX 78213 I 210.375.9000
TEXAS ENGINEERING FIRM #470 I TEXAS SURVEYING FIRM #10028800

Texas Department of Transportation ©2022

SH 211 AT LAMBDA DRIVE

GENERAL NOTES

SHEET 1 OF 6

DGN:	FED. RD. DIV. NO.	STATE	FEDERAL AID PROJECT NO.			HIGHWAY NO.
CHK DGN:	6	TEXAS				SH0211
DWG:	DIST.	COUNTY	CONT. NO.	SECT. NO.	JOB NO.	SHEET NO.
CHK DWG:	SAT	BEXAR	3544	04		2

Plotted on: 12/6/2022
Design Filename: P:\89\46\24\Design\Transpo\General\894624_GEN_NOTES.dgn

G-13 In accordance with the Underground Facility Damage Prevention Act (One Call Bill) the phone number for a utility locator is 811. It is the Contractor's responsibility to plan for utility locators as needed.

G-14 Underground utilities owned by the Texas Department of Transportation may be present within the Right-Of-Way. Call or email the TxDOT offices listed below for locates a minimum of 48 hours in advance of excavation. If city or town owned irrigation facilities are present, call the appropriate department of the local city or town a minimum of 48 hours in advance of excavation. The Contractor is liable for all damages incurred to the above-mentioned utilities when working without having the utilities located prior to excavation.

For signal and ITS locates call TransGuide at 210-731-5136 or email sat_its_locates@txdot.gov for ITS locates and signal.request@txdot.gov for signal locates.

G-15 Contractor questions on this project are to be addressed to the following individual(s):
District Traffic Engineer, Eduardo L. Villalon, P.E., CFM
eduardo.villalon@txdot.gov

Contractor questions will be accepted through email, phone, and in person by the above individuals.

--Item 5—
When working near aerial electrical lines or utility poles, comply with Federal, State and local regulations.

5-3 Prevention of Migratory Bird Nesting

It is anticipated that migratory birds, a protected group of species, may try to nest on bridges, culverts, vegetation, or gravel substrate, at any time of the year. The preferred nesting season for migratory birds is from February 15 through October 1. When practicable, schedule construction operations outside of the preferred nesting season. Otherwise, nests containing migratory birds must be avoided and no work will be performed in the nesting areas until the young birds have fledged.

Structures

Bridge and culvert construction operations cannot begin until swallow nesting prevention is implemented, until after October 1 if it's determined that swallow nesting is actively occurring, or until it's determined swallow nests have been abandoned. If the State installed nesting deterrent on the bridges and culverts, maintain the existing nesting deterrent to prevent swallow nesting until October 1 or completion of the bridge and culvert work, whichever occurs earlier. If new nests are built and occupied after the beginning of the work, do not perform work that can

interfere with or discourage swallows from returning to their nests. Prevention of swallow nesting can be performed by one of the following methods:

1. By February 15 begin the removal of any existing mud nests and all other mud placed by swallows for the construction of nests on any portion of the bridge and culverts. The Engineer will inspect the bridges and culverts for nest building activity. If swallows begin nest building, scrape, or wash down all nest sites. Perform these activities daily unless the Engineer determines the need to do this work more frequently. Remove nests and mud through October 1 or until bridge and culvert construction operations are completed.

2. By February 15 place a nesting deterrent (which prevents access to the bridge and culvert by swallows) on the entire bridge (except deck and railing) and culverts. This work is subsidiary to the various bid items.

No extension of time or compensation payment will be granted for a delay or suspension of work caused by nesting swallows.

5-4 Provide a non-intrusive back-up alarm system on all heavy equipment used in close proximity to residential areas. This item is subsidiary to various bid items.

5-6 Excavation within 5 feet of an existing CPS Energy pole will require pole bracing. Contact CPS Energy utility coordination to request pole bracing (Customer Engineering 210-353-4050). The estimated duration for the pole bracing process is approximately 10 to 15 weeks.

--Item 6--
6-2 Steel Wrapped or Asbestos Utility Lines:

Existing steel wrapped natural gas and/or asbestos cement (AC) water lines that will no longer be in service are usually abandoned in place (AIP). However, if any of these lines have to be removed for whatever reason (in the way of other construction, to make tie-ins, etc.), comply with Item 6.

If removal of AC water lines is included in the construction contract, then notify the Engineer of proposed dates of removal of the AC water lines in accordance to Item 6. Excavate to the top of the AC water line to allow a separate contractor hired by the State to remove the AC water line. The excavation for the AC water line removal is subsidiary to the work that created the need for the removal (excavation for structures, roadway, a new line, tie-ins, etc.).

--Item 7--
7-1B The total disturbed area within the project is anticipated at less than one (1) acre. Due to this type of construction, the project qualifies for exclusion under the Construction General Permit (CGP) issued by the Texas Commission on Environmental Quality (TCEQ). However, should the sum of the Engineer's anticipated disturbances and the Contractor's (On ROW and off ROW)

REV. NO.	DATE	DESCRIPTION	BY

PAPE-DAWSON ENGINEERS
SAN ANTONIO I AUSTIN I HOUSTON I FORT WORTH I DALLAS
2000 NW LOOP 410 I SAN ANTONIO, TX 78213 I 210.375.9000
TEXAS ENGINEERING FIRM #470 I TEXAS SURVEYING FIRM #10028800

Texas Department of Transportation ©2022

SH 211 AT LAMBDA DRIVE

GENERAL NOTES

SHEET 2 OF 6

DGN:	FED. RD. DIV. NO.	STATE	FEDERAL AID PROJECT NO.			HIGHWAY NO.
CHK DGN:	6	TEXAS				SH0211
DWG:	DIST.	COUNTY	CONT. NO.	SECT. NO.	JOB NO.	SHEET NO.
CHK DWG:	SAT	BEXAR	3544	04		3

Plotted on: 12/6/2022
Design Filename: P:\89\46\24\Design\Transpo\General\894624_GEN_NOTES.dgn

PSL's equal or exceed the one (1) acre threshold; both TxDOT and the Contractor have project responsibilities under the CGP that reverts to non-exclusion status. Obtain approval for all non-depicted areas of disturbance that increases the initial soil and vegetation disturbed area estimates before work starts at these locations.

7-3A No significant traffic generators events identified.

--Item 8--

8-1 Working days will be computed and charged in accordance with Article 8.3.1. Standard Day work week.

8-3 Create and maintain a Bar Chart schedule.

--Item 9--

9-1 When approved, provide uniformed, off-duty law enforcement officers with marked vehicles during work that requires a lane closure. The officer in marked vehicles shall be located as approved to monitor or direct traffic during the closure. The method used to direct traffic at signalized intersections shall be as approved. Additional officers and vehicles may be provided when approved or directed.

Complete the daily tracking form provided by the department and submit invoices that agree with the tracking form for payment at the end of each month approved services were provided.

Show proof of certification by the Texas Commission on Law Enforcement Standards.

All law enforcement personnel used in Work Zone Traffic Control shall be trained for performing duties in work zones and are required to take "Safe and Effective Use of Law Enforcement Personnel in Work Zones" (Course #133119) which can be found online at the following site: www.nhi.fhwa.dot.gov

Certificates of completion should be available to all who finish the course. These should be kept by the officers to substantiate completion when reporting to the work site.

Minimums, scheduling fees, etc. will not be paid; Owner will consider paying cancellation fees on a case-by-case basis.

--Item 500--

500-1 "Materials on Hand" payments will not be considered in determining percentages for mobilization payments.

--Item 502--

502-1 General

502-1A In addition to providing a Contractor's Responsible Person and a phone number for emergency contact, have an employee available to respond on the project for emergencies and for taking corrective measures within 2 hours or within a reasonable time frame as specified by the Engineer.

502-1C Avoid placing stockpiles, equipment, and other construction materials within the roadway's horizontal clear zone or at any location that will constitute a hazard and will endanger traffic. If a stockpile is placed within the clear zone, address in accordance with the TMUTCD.

502-1D If Nighttime work is required and work is not behind positive barrier then full Class 3 reflective gear is required to be worn by all workers, hard hat halos are required to be worn by the flaggers at flagging stations, TY III barricades are required to be spaced at 500 ft, and a mandatory night work meeting is required.

502-1G Access to adjoining property must be maintained at all times.

502-2 Barricades, Signs, and Traffic Control Devices

502-2A When advanced warning flashing arrow panels and/or changeable message sign is specified, have one standby unit in good condition at the job site. Standby time shall be considered subsidiary to the bid item.

502-2B After written notification, the time frame is provided on the Form 599 to provide properly maintained signs and barricades before considered in non-compliance with this item.

502-3 Lane and Ramp Closures and Detours

502-3A Notify the Engineer in writing 10 business days in advance of any temporary or permanent lane, ramp, connector, etc. closures/detours, restrictions to lane widths, alterations to vertical clearances, or modifications to radii. Any other modifications to the roadway that may adversely affect the mobility of oversized/overweight trucks also require 10 business days advance written notice to the Engineer. At least one lane must always remain open.

502-3C At no time shall two consecutive intersecting roadways be closed at one time during construction.

502-3E Unless otherwise noted in the plans and/or as directed by the Engineer, daily lane closures shall be limited according to the following restrictions:

No lane closures will be permitted for the following dates and/or special events:
Between December 15 and January 1
Fiesta Week and Sales Tax Holidays (Bexar County Only)
Wednesday before Thanksgiving thru the Sunday after Thanksgiving

REV. NO.	DATE	DESCRIPTION	BY

PAPE-DAWSON ENGINEERS
SAN ANTONIO I AUSTIN I HOUSTON I FORT WORTH I DALLAS
2000 NW LOOP 410 I SAN ANTONIO, TX 78213 I 210.375.9000
TEXAS ENGINEERING FIRM #470 I TEXAS SURVEYING FIRM #10028800

Texas Department of Transportation ©2022

SH 211 AT LAMBDA DRIVE

GENERAL NOTES

SHEET 3 OF 6

DGN:	FED. RD. DIV. NO.	STATE	FEDERAL AID PROJECT NO.			HIGHWAY NO.
CHK DGN:	6	TEXAS				SH0211
DWG:	DIST.	COUNTY	CONT. NO.	SECT. NO.	JOB NO.	SHEET NO.
CHK DWG:	SAT	BEXAR	3544	04		4

Plotted on: 12/6/2022
Design Filename: P:\89\46\24\Design\Transpo\General\894624_GEN_NOTES.dgn

Saturday and Sunday before Memorial Day and Labor Day
Saturday or Sunday when July 4 falls on a Friday or Monday
Election days (Bexar County Only)
During major events at the AT&T Center (Spurs home games, Rodeo, concerts, etc.)
Alamodome, and/or Convention Center (Bexar County Only)
Good Friday thru Easter Monday

502-4 Traffic Signals

502-4A There are traffic signals at the intersection of SH 211 and Lambda Dr. Always keep the signals in operation except when necessary for specific installation operations, including any modifications to existing signal heads to always maintain clear visibility. Adjustment of any signal head will be subsidiary to Item 502. When it is necessary for a signal to be turned off, or when left-turn lanes are closed, hire off duty police officers to control the traffic until the signals are back in satisfactory condition.

502-4C Coordinate with the appropriate entity (City of San Antonio, City of New Braunfels, etc.) or TxDOT when left-turn lanes are closed and/or for signal timing revisions as necessary.

502-5 Hauling

502-5A The use of rubber-tired equipment will be required for moving dirt or other materials along or across pavement surfaces. Where the contractor desires to move any equipment not licensed for operation on public highways, on or across pavement, they shall protect the pavement from damage as directed/approved by the Engineer.

502-5C The Contractor shall keep the roadway clean and free of dirt or other materials during hauling operations. If the Contractor does not maintain a clean roadway, they shall cease all construction operations, when directed by the Engineer, to clean the roadway to the satisfaction of the Engineer.

--Item 506--

506-1B The Storm Water Pollution Prevention Plan (SWP3) consists of temporary erosion control measures needed and provided for under this Item. The disturbed area is less than one acre and use of erosion control measures is not anticipated. If physical conditions encountered at the job site require necessary controls, BMP installation, maintenance, and removal will be paid as extra work on a force account basis per Articles 4.4 and 9.7. An Inspector will perform a regularly scheduled SW3P inspection every 7 calendar days if erosion control measures are installed.

506-2 Failure to address items noted on the SW3P inspection report within two report cycles may result in the Department stopping all construction operations, exclusive of time charges, or withholding

that month's estimate until the SW3P deficiencies are corrected unless the Engineer determines that the area is too wet to correct SW3P deficiencies.

506-3 Failure to correctly maintain daily monitoring reports and submitting to TxDOT on a daily/weekly basis may result in the monthly estimate being withheld.

--Item 618--

618-1 It might be necessary to cut concrete for placement of conduit. Saw cut existing concrete, remove the concrete from the steel reinforcement (bars or fabric) and bend the steel to install the conduit. After the conduit has been placed, bend the steel back to its original position and back-fill the trench with an approved concrete. This work is subsidiary to this Item.

618-2 The conduit depth for illumination under the City of San Antonio streets is 36 inches.

--Item 644--

644-1 The wedge anchor system shown on State Standard Sheet SMD (TWT) is not allowed.

644-2 Triangular Slipbase Systems with set screws are not allowed.

--Item 666--

666-1 Use TY II markings (vs. an acrylic or epoxy) on asphalt surfaces as the sealer for the TY I markings, unless otherwise approved by the Engineer.

--Item 672--

672-1 Place all adhesive material directly from the heated dispenser to the pavement. Do not use portable or non-heated containers. Use adhesive of sufficient thickness so that when the marker is pressed into the adhesive, 1/8" or more adhesive will remain under 100% of the marker. The adhesive should extend not less than 1/2" but not more than 1 1/2" beyond the perimeter of the marker.

--Item 677--

677-1 Obtain approval before using the mechanical method for the elimination of existing thermoplastic pavement markings.

--Item 680--

680-1 Furnish and install all required materials and equipment necessary for the complete and operating traffic signal installation at the following intersections: SH 211 and Lambda Dr.

680-5 Connect all field wiring to the controller assembly into the polyphaser. The Signal Shop representative will assist in determining how the detection cables are to be connected, and will also program the controller for operation, hook up the malfunction management unit (MMU) or

REV. NO.	DATE	DESCRIPTION	BY

PAPE-DAWSON ENGINEERS
SAN ANTONIO I AUSTIN I HOUSTON I FORT WORTH I DALLAS
2000 NW LOOP 410 I SAN ANTONIO, TX 78213 I 210.375.9000
TEXAS ENGINEERING FIRM #470 I TEXAS SURVEYING FIRM #10028800

Texas Department of Transportation ©2022

SH 211 AT LAMBDA DRIVE

GENERAL NOTES

SHEET 4 OF 6

DGN:	FED. RD. DIV. NO.	STATE	FEDERAL AID PROJECT NO.			HIGHWAY NO.
CHK DGN:	6	TEXAS				SH0211
DWG:	DIST.	COUNTY	CONT. NO.	SECT. NO.	JOB NO.	SHEET NO.
CHK DWG:	SAT	BEXAR	3544	04		5

Plotted on: 12/6/2022
Design Filename: P:\89\46\24\Design\Transpo\General\894624_GEN_NOTES.dgn

conflict monitor, detector units, and other equipment, and turn on the controller. Have a qualified technician on the project site to place the traffic signals in operation.

680-7 Use LED lamps from the prequalified material producer lists as shown on the Texas Department of Transportation (TxDOT) – Construction Division's (CST) material producer list. Category is "Roadway Illumination and Electrical Supplies." under item 610. No substitutions will be allowed for materials found on this list.

680-8 Demonstrate that the field wiring is properly installed. Install the electrical equipment in a neat and workmanlike manner.

680-9 Use the following wiring sequence when connecting signal sections to the cabinet:

Conductor No.	Base Color	Tracer Color	Signal Face
1	Black		Yellow Ball
2	White		Neutral
3	Red		Red Ball
4	Green		Green Ball
5	Orange		Yellow Arrow
6	Blue		Green Arrow
7	White	Black	Spare

680-10 All existing signal equipment with the exception of the signal controller and related equipment become the property of the Contractor. Deliver the controller and related equipment to the Signal shop, located at 4615 NW Loop 410 (corner of IH 410 and Callaghan Road) in San Antonio, Texas or to the Area Office as directed.

680-11 Use qualified personnel to respond to and diagnose all trouble calls during the thirty-day test period. Repair any malfunction to Contractor-supplied signal equipment. Provide to the Engineer a local telephone number, not subject to frequent changes and available on a 24-hour basis, for reporting trouble calls. Response time to reported calls must be less than 2 hours. Make appropriate repairs within 24 hours. Place a logbook in the controller cabinet and keep a record of each trouble call reported. Notify the Engineer of each trouble call. Do not clear the error log in the conflict monitor or MMU during the thirty-day test period without approval.

680-12 Integrate the proposed traffic signal(s) into the existing Advanced Traffic Management System (ATMS) as shown on the plans. Centracs ATMS software, which utilizes Econolite controllers, is currently in use in the San Antonio District. Provide controllers on this project that fully communicate with the existing ATMS software.

680-13 This project includes the installation of at least one cellular modem at the location(s) specified in the plans. Cellular modem(s) and power supply(s) will be furnished by the department. Provide

Control: 3544-04 **Sheet**

County: Bexar

Highway: SH0211

all materials not supplied by the department necessary for the cellular modem installation. All materials provided by the contractor must be new unless otherwise shown on the plans. Equipment provided by the department shall be stored by the department for pick up at the TxDOT San Antonio TransGuide Office, 3500 NW Loop 410 San Antonio, TX 78229. Prevent damage to all cellular modem components supplied by the department. Replace any component that is damaged or lost during transportation or installation at the contractor's expense. Verify operation of the cellular modem(s) together with operation of its links; demonstrate that data can be transmitted at a satisfactory rate from the field location to the central location. Demonstrate that the cellular modem(s) data packets are being received at the central site via a networked computer. Transportation, installation and incidentals for installation of the cellular modem(s) shall be considered subsidiary to item 680.

680-14 Provide a submittal compliance matrix with all traffic signal submittals.

680-16 Ensure that all TMS (Traffic Management System) equipment furnished and installed is completely compatible with the existing hardware and software located within the TransGuide operations center (i.e. TransGuide central software). The contractor shall contact the traffic management engineer for details on the system network architecture.

680-17 Contractor shall be responsible for integrating and testing all new TMS equipment and any existing TMS equipment that is relocated into the existing network management system, subsidiary to the various bid items.

680-18 **Traffic signal communication package (Material and Installation subsidiary to item 680) Includes needed quantities of the following items:**

- CELLULAR MODEM (CISCO MODEL IR1101) EA
- ETHERNET SWITCH (MOXA MODEL EDR-810-VPN-2GSFP-T) EA
- IP CAMERA (AXIS M5525-E) EA
- IP CAMERA MOUNTING BRACKET (AXIS T94AO1D PENDANT KIT) EA
- POWER STRIP EA
- SWITCH POWER SUPPLY EA
- POE POWER SUPPLY – FOR CAMERA ONLY EA
- ETHERNET CABLE (COLOR CODED) LF

680-19 **Signal Timing Plan**:
The donor will prepare the traffic signal timing plan unless otherwise specified by the engineer. The traffic signal timing plan must be approved by the engineer prior to the programming and testing of the controller cabinet and assembly. Should traffic signal coordination be required, the donor will provide a coordination timing plan to enhance the operations of the system.

REV. NO.	DATE	DESCRIPTION	BY

PAPE-DAWSON ENGINEERS
SAN ANTONIO I AUSTIN I HOUSTON I FORT WORTH I DALLAS
2000 NW LOOP 410 I SAN ANTONIO, TX 78213 I 210.375.9000
TEXAS ENGINEERING FIRM #470 I TEXAS SURVEYING FIRM #10028800

Texas Department of Transportation ©2022

SH 211 AT LAMBDA DRIVE

GENERAL NOTES

SHEET 5 OF 6

DGN:	FED. RD. DIV. NO.	STATE	FEDERAL AID PROJECT NO.			HIGHWAY NO.
CHK DGN:	6	TEXAS				SH0211
DWG:	DIST.	COUNTY	CONT. NO.	SECT. NO.	JOB NO.	SHEET NO.
CHK DWG:	SAT	BEXAR	3544	04		6

Plotted on: 12/6/2022
Design Filename: P:\89\46\24\Design\Transpo\General\894624_GEN_NOTES.dgn

680-20 Security against theft and vandalism of all traffic signal equipment is the full responsibility of the contractor until the date of final acceptance of the project by the engineer.

680-21 Maintenance of all TMS equipment furnished and installed on this project is the full responsibility of the contractor until date of final acceptance of this project by the engineer. All required documentation must be turned in before TxDOT will accept project for maintenance.

680-22 Perform all electrical work in accordance with the National Electrical Code and Texas Department of Transportation Specifications.

680-23 In accordance with the Underground Facility Damage Prevention Act (One Call Bill) the phone number for a utility locator is 1-800-545-6005. It is the Contractor's responsibility to make arrangements for utility locators as needed.

680-24 Underground utilities owned by the Texas Department of Transportation may be present within the Right-Of-Way. Call the TxDOT offices listed below for locates a minimum of 48 hours in advance of excavation. If city or town owned irrigation facilities are present, call the appropriate department of the local city or town a minimum of 48 hours in advance of excavation. The Contractor is liable for all damages incurred to the above mentioned utilities when working without having the utilities located prior to excavation.

--Item 682--

682-2 Cover all signal faces until placed in operation. This work is subsidiary to various bid items.

682-3 All mounting attachments shall be constructed of steel pipe and mounted as shown on the plans.

--Item 684--

684-1 Provide an extra 10' for each cable terminating in the controller cabinet. All cables must be continuous without splices from terminal point to terminal point. All proposed signal cable must be #12 AWG stranded copper.

--Item 6185--

6185-1 1 shadow vehicles with TMA will be required for this project for 1 day. The TMA's will be measured and paid for by the DAY for each TMA/TA set up and operational on the worksite.

--Item 6292--

6292-1 Radar presence detection device must utilize true-presence detection. Systems using locking algorithms to attempt presence detection will not be accepted. In addition, radar systems will not be allowed to use extensions/delays or place the controller on locking detection to aid in presence detection.

6292-2 Radar presence detection device must be able to detect up to 10 lanes with a minimum offset of 6' and have at least 16 zones and channels per unit.

6292-3 Radar presence detection device must be mounted on the same side of the intersection as the lanes it is set to detect.

6292-4 Final placement of radar devices must be approved by the engineer.

6292-5 Furnish and install new Wavetronix SmartSensor Matrix, or approved equivalent, for radar presence detectors and Wavetronix SmartSensor Advance, or approved equivalent, for radar advanced detection devices.

REV. NO.	DATE	DESCRIPTION	BY

PAPE-DAWSON ENGINEERS
SAN ANTONIO I AUSTIN I HOUSTON I FORT WORTH I DALLAS
2000 NW LOOP 410 I SAN ANTONIO, TX 78213 I 210.375.9000
TEXAS ENGINEERING FIRM #470 I TEXAS SURVEYING FIRM #10028800

Texas Department of Transportation ©2022

SH 211 AT LAMBDA DRIVE

GENERAL NOTES

SHEET 6 OF 6

DGN:	FED. RD. DIV. NO.	STATE	FEDERAL AID PROJECT NO.			HIGHWAY NO.
CHK DGN:	6	TEXAS				SH0211
DWG:	DIST.	COUNTY	CONT. NO.	SECT. NO.	JOB NO.	SHEET NO.
CHK DWG:	SAT	BEXAR	3544	04		7

Plotted on: 12/6/2022
Design Filename: P:\89\46\24\Design\Transpo\General\894624_GEN_NOTES.dgn

ITEM	DESCRIPTION	UNIT	QTY
0500-6001	MOBILIZATION	LS	1.0
0502-6001	BARRICADES, SIGNS AND TRAFFIC HANDLING	MO	1
0636-6007	REPLACE EXISTING ALUMINUM SIGNS(TY A)	SF	28
0666-6030	REFL PAV MRK TY I (W)8"(DOT)(100MIL)	LF	48
0666-6036	REFL PAV MRK TY I (W)8"(SLD)(100MIL)	LF	105
0666-6048	REFL PAV MRK TY I (W)24"(SLD)(100MIL)	LF	106
0666-6054	REFL PAV MRK TY I (W)(ARROW)(100MIL)	EA	1
0666-6078	REFL PAV MRK TY I (W)(WORD)(100MIL)	EA	1
0666-6224	PAVEMENT SEALER 4"	LF	350
0666-6226	PAVEMENT SEALER 8"	LF	153
0666-6230	PAVEMENT SEALER 24"	LF	106
0666-6231	PAVEMENT SEALER (ARROW)	EA	1
0666-6232	PAVEMENT SEALER (WORD)	EA	1
0666-6315	RE PM W/RET REQ TY I (Y)4"(SLD)(100MIL)	LF	350
0672-6007	REFL PAV MRKR TY I-C	EA	6
0672-6009	REFL PAV MRKR TY II-A-A	EA	20
0677-6001	ELIM EXT PAV MRK & MRKS (4")	LF	768
0677-6003	ELIM EXT PAV MRK & MRKS (8")	LF	76
0677-6007	ELIM EXT PAV MRK & MRKS (24")	LF	228
0677-6020	ELIM EXT PAV MRK & MRKS (MED NOSE)	EA	1
0678-6001	PAV SURF PREP FOR MRK (4")	LF	350
0678-6004	PAV SURF PREP FOR MRK (8")	LF	153
0678-6008	PAV SURF PREP FOR MRK (24")	LF	106
0678-6009	PAV SURF PREP FOR MRK (ARROW)	EA	1
0678-6016	PAV SURF PREP FOR MRK (WORD)	EA	1
0680-6011	INSTALL HWY TRF SIG (UPGRADE)	EA	1
0680-XX05	*COMMUNICATION PACKAGE	EA	1
0682-6002	VEH SIG SEC (12")LED(GRN ARW)	EA	2
0682-6004	VEH SIG SEC (12")LED(YEL ARW)	EA	2
0682-6006	VEH SIG SEC (12")LED(RED ARW)	EA	2
0682-6057	RETROFIT REFL BRDR SHEETING (3 SEC)	EA	11
0682-6058	RETROFIT REFL BRDR SHEETING (4 SEC)	EA	1
0682-6060	BACKPLATE W/REFL BRDR(3 SEC)	EA	2
0684-6012	TRF SIG CBL (TY A)(12 AWG)(7 CONDR)	LF	465
6004-6031	ITS COM CBL (ETHERNET)	LF	135
6010-6001	CCTV FIELD EQUIPMENT (ANALOG)	EA	1
6010-6003	CCTV FIELD CONTROLLER	EA	1
6010-6004	CCTV MOUNT (POLE)	EA	1
6185-6002	TMA (STATIONARY)	DAY	1
6292-6007	RELOCATE RVDS	EA	1
6292-XXX1	*RVDS(PRESENCE DETECTION) COMM CABLE	LF	190

*SUBSIDIARY TO PERTINENT ITEMS (NO SEPARATE PAYMENT)

REV. NO.	DATE	DESCRIPTION	BY

PAPE-DAWSON ENGINEERS

SAN ANTONIO I AUSTIN I HOUSTON I FORT WORTH I DALLAS
2000 NW LOOP 410 I SAN ANTONIO, TX 78213 I 210.375.9000
TEXAS ENGINEERING FIRM #470 I TEXAS SURVEYING FIRM #10028800

Texas Department of Transportation ©2022

SH 211 AT LAMBDA DRIVE

QUANTITY SUMMARY

DGN:	FED. RD. DIV. NO.	STATE	FEDERAL AID PROJECT NO.			HIGHWAY NO.
CHK DGN:	6	TEXAS				SH0211
DWG:	DIST.	COUNTY	CONT. NO.	SECT. NO.	JOB NO.	SHEET NO.
CHK DWG:	SAT	BEXAR	3544	04		8

Plotted on: 12/6/2022
Design Filename: P:\89\46\24\Design\Transpo\General\894624_QTY_SUMMARY.dgn

TRAFFIC SIGNAL HEADS

12" LED VEHICLE SIGNAL SECTIONS WITH BACKPLATES

SIGNAL FACES			
QTY KEY	1	2	3
	9	2	2

PHASE DIAGRAM

Ø1 Ø2 Ø3 Ø4
Ø5 Ø6 Ø7 Ø8

CONFLICT FLASH: RED ALL PHASES
STARTUP FLASH: YELLOW 2+6, RED ALL OTHERS

LEGEND

- EQUIPMENT ID
- CABLE RUN ID
- SIGNAL POLE
- VEHICLE SIGNAL HEAD
- MAST ARM SIGN
- RPDD
- RADD
- LUMINAIRE
- ELECTRIC SERVICE
- CABLE RUN (TRENCH)
- CABLE RUN (BORE)
- GROUND BOX
- GROUND MOUNTED SIGN

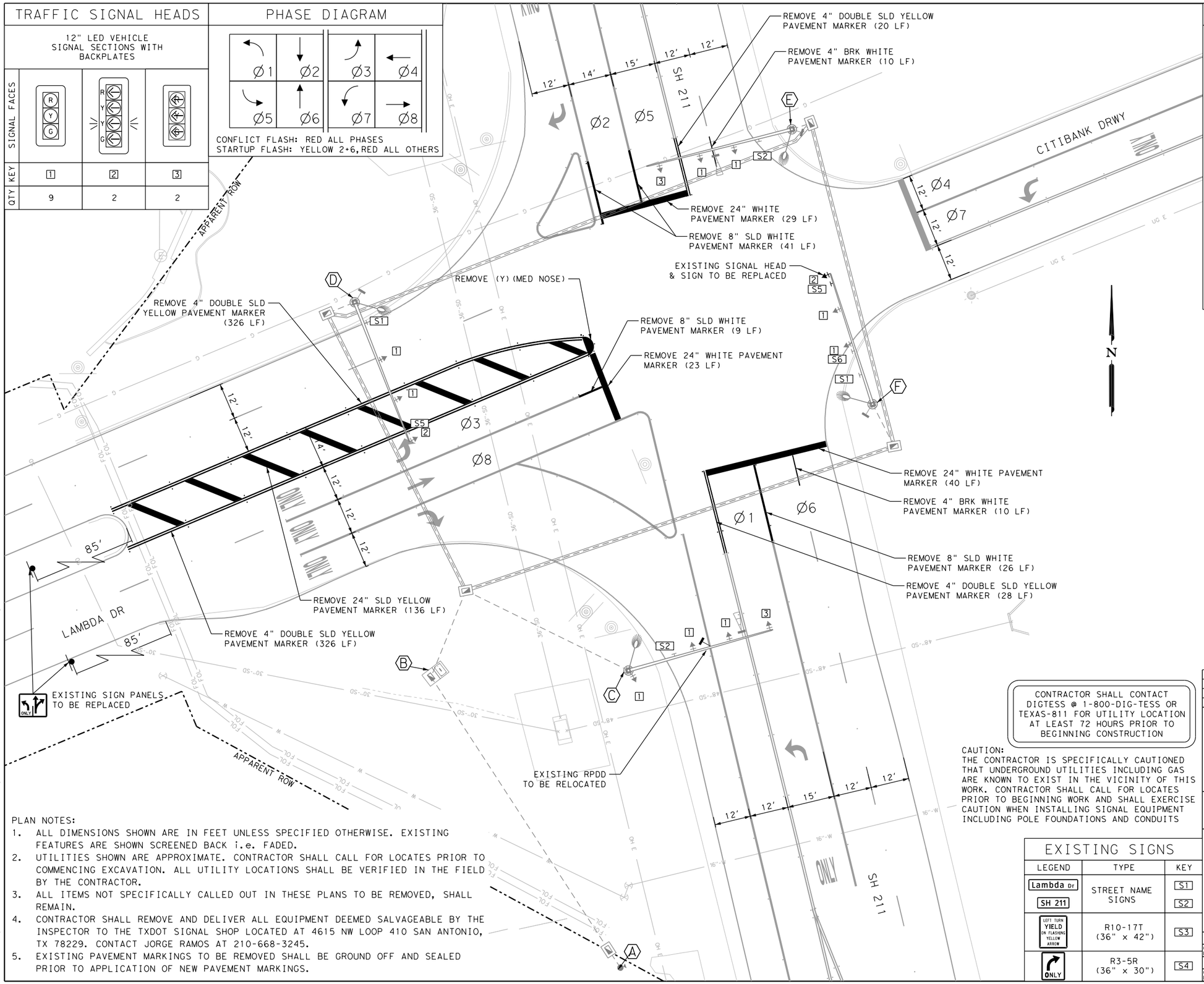

PLAN NOTES:

1. ALL DIMENSIONS SHOWN ARE IN FEET UNLESS SPECIFIED OTHERWISE. EXISTING FEATURES ARE SHOWN SCREENED BACK i.e. FADED.
2. UTILITIES SHOWN ARE APPROXIMATE. CONTRACTOR SHALL CALL FOR LOCATES PRIOR TO COMMENCING EXCAVATION. ALL UTILITY LOCATIONS SHALL BE VERIFIED IN THE FIELD BY THE CONTRACTOR.
3. ALL ITEMS NOT SPECIFICALLY CALLED OUT IN THESE PLANS TO BE REMOVED, SHALL REMAIN.
4. CONTRACTOR SHALL REMOVE AND DELIVER ALL EQUIPMENT DEEMED SALVAGEABLE BY THE INSPECTOR TO THE TXDOT SIGNAL SHOP LOCATED AT 4615 NW LOOP 410 SAN ANTONIO, TX 78229. CONTACT JORGE RAMOS AT 210-668-3245.
5. EXISTING PAVEMENT MARKINGS TO BE REMOVED SHALL BE GROUND OFF AND SEALED PRIOR TO APPLICATION OF NEW PAVEMENT MARKINGS.

CONTRACTOR SHALL CONTACT DIGTESS @ 1-800-DIG-TESS OR TEXAS-811 FOR UTILITY LOCATION AT LEAST 72 HOURS PRIOR TO BEGINNING CONSTRUCTION

CAUTION:
THE CONTRACTOR IS SPECIFICALLY CAUTIONED THAT UNDERGROUND UTILITIES INCLUDING GAS ARE KNOWN TO EXIST IN THE VICINITY OF THIS WORK. CONTRACTOR SHALL CALL FOR LOCATES PRIOR TO BEGINNING WORK AND SHALL EXERCISE CAUTION WHEN INSTALLING SIGNAL EQUIPMENT INCLUDING POLE FOUNDATIONS AND CONDUITS

EXISTING SIGNS

LEGEND	TYPE	KEY
Lambda Dr / SH 211	STREET NAME SIGNS	S1 / S2
LEFT TURN YIELD ON FLASHING YELLOW ARROW	R10-17T (36" x 42")	S3
ONLY	R3-5R (36" x 30")	S4

DESIGN

STATE OF TEXAS — COURTNEY B. CLARK — 131754 — LICENSED PROFESSIONAL ENGINEER

Courtney Clark — 12/6/2022
COURTNEY B. CLARK, P.E. — DATE

APPROVAL

STATE OF TEXAS — GILMER D. GASTON — 80472 — LICENSED PROFESSIONAL ENGINEER

Gilmer D. Gaston — 12/6/2022
GILMER D. GASTON, P.E. — DATE

0 15 30 45
SCALE: 1" = 30'

REV. NO.	DATE	DESCRIPTION	BY

PAPE-DAWSON ENGINEERS
SAN ANTONIO I AUSTIN I HOUSTON I FORT WORTH I DALLAS
2000 NW LOOP 410 I SAN ANTONIO, TX 78213 I 210.375.9000
TEXAS ENGINEERING FIRM #470 I TEXAS SURVEYING FIRM #10028800

Texas Department of Transportation ©2022

SH 211 AT LAMBDA DRIVE

EXISTING CONDITIONS AND REMOVALS

DGN:	FED. RD. DIV. NO.	STATE	FEDERAL AID PROJECT NO.			HIGHWAY NO.
CHK DGN:	6	TEXAS				SH0211
DWG:	DIST.	COUNTY	CONT. NO.	SECT. NO.	JOB NO.	SHEET NO.
CHK DWG:	SAT	BEXAR	3544	04		9

Plotted on: 12/6/2022

Design Filename: P:\89\46\24\Design\Transpo\Traffic\894624_EXIST.dgn

PROPOSED SIGNAL HEADS

12" LED VEHICLE SIGNAL SECTIONS WITH REFLECTIVE BACKPLATES

SIGNAL FACES	
KEY	3
QTY	2

PHASE DIAGRAM

CONFLICT FLASH: RED ALL PHASES
STARTUP FLASH: YELLOW 2+6, RED ALL OTHERS

PROPOSED SIGNS

LEGEND	TYPE	KEY
ONLY	R3-5L (36" x 30")	S5

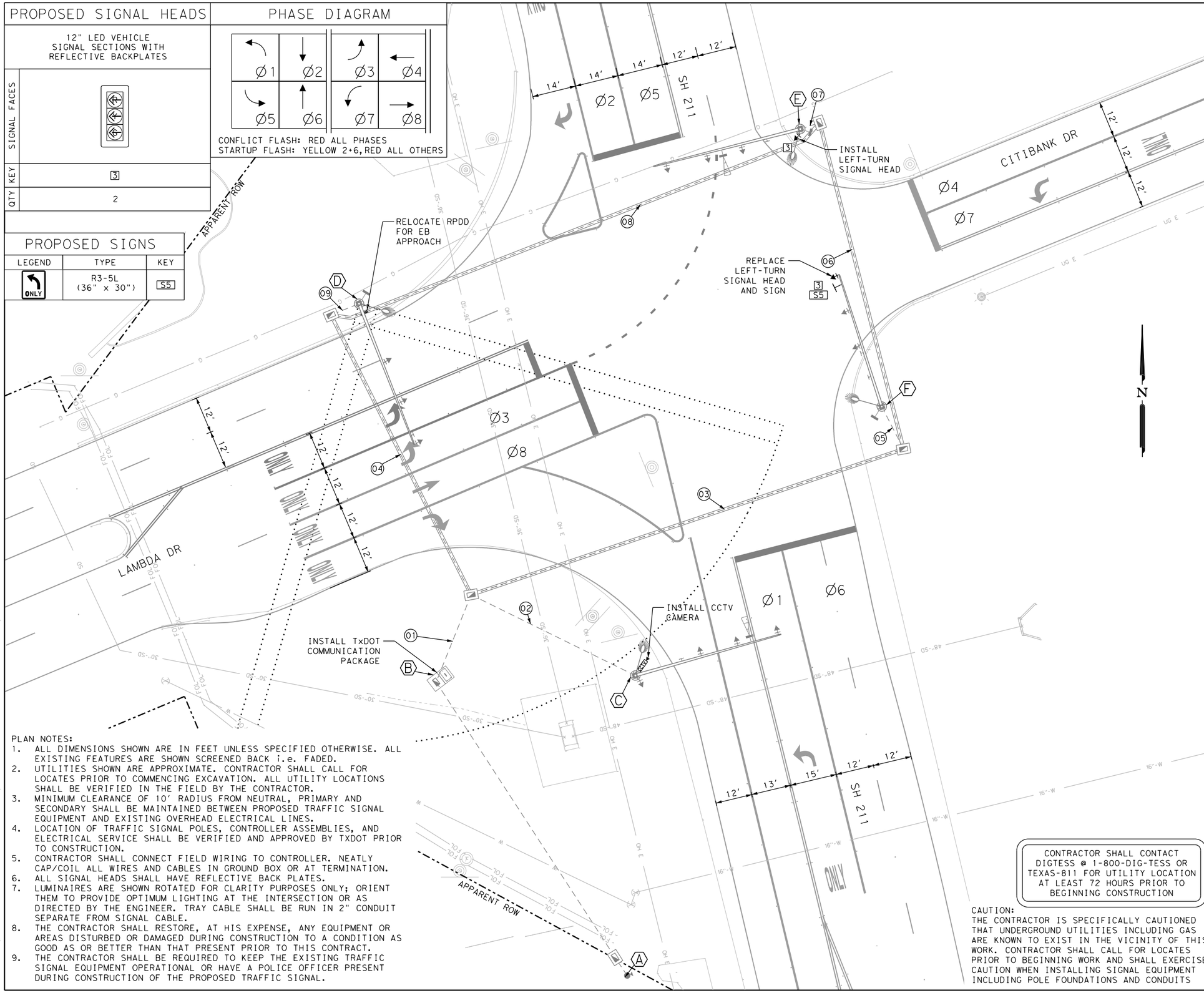

LEGEND

A	EQUIPMENT ID
01	CABLE RUN ID
	SIGNAL POLE
	VEHICLE SIGNAL HEAD
	MAST ARM SIGN
CCTV	CCTV CAMERA
	RPDD
	RADD
	LUMINAIRE
	ELECTRIC SERVICE
	CABLE RUN (TRENCH)
	CABLE RUN (BORE)
	GROUND BOX
	GROUND MOUNTED SIGN

PLAN NOTES:

1. ALL DIMENSIONS SHOWN ARE IN FEET UNLESS SPECIFIED OTHERWISE. ALL EXISTING FEATURES ARE SHOWN SCREENED BACK i.e. FADED.
2. UTILITIES SHOWN ARE APPROXIMATE. CONTRACTOR SHALL CALL FOR LOCATES PRIOR TO COMMENCING EXCAVATION. ALL UTILITY LOCATIONS SHALL BE VERIFIED IN THE FIELD BY THE CONTRACTOR.
3. MINIMUM CLEARANCE OF 10' RADIUS FROM NEUTRAL, PRIMARY AND SECONDARY SHALL BE MAINTAINED BETWEEN PROPOSED TRAFFIC SIGNAL EQUIPMENT AND EXISTING OVERHEAD ELECTRICAL LINES.
4. LOCATION OF TRAFFIC SIGNAL POLES, CONTROLLER ASSEMBLIES, AND ELECTRICAL SERVICE SHALL BE VERIFIED AND APPROVED BY TXDOT PRIOR TO CONSTRUCTION.
5. CONTRACTOR SHALL CONNECT FIELD WIRING TO CONTROLLER. NEATLY CAP/COIL ALL WIRES AND CABLES IN GROUND BOX OR AT TERMINATION.
6. ALL SIGNAL HEADS SHALL HAVE REFLECTIVE BACK PLATES.
7. LUMINAIRES ARE SHOWN ROTATED FOR CLARITY PURPOSES ONLY; ORIENT THEM TO PROVIDE OPTIMUM LIGHTING AT THE INTERSECTION OR AS DIRECTED BY THE ENGINEER. TRAY CABLE SHALL BE RUN IN 2" CONDUIT SEPARATE FROM SIGNAL CABLE.
8. THE CONTRACTOR SHALL RESTORE, AT HIS EXPENSE, ANY EQUIPMENT OR AREAS DISTURBED OR DAMAGED DURING CONSTRUCTION TO A CONDITION AS GOOD AS OR BETTER THAN THAT PRESENT PRIOR TO THIS CONTRACT.
9. THE CONTRACTOR SHALL BE REQUIRED TO KEEP THE EXISTING TRAFFIC SIGNAL EQUIPMENT OPERATIONAL OR HAVE A POLICE OFFICER PRESENT DURING CONSTRUCTION OF THE PROPOSED TRAFFIC SIGNAL.

CONTRACTOR SHALL CONTACT DIGTESS @ 1-800-DIG-TESS OR TEXAS-811 FOR UTILITY LOCATION AT LEAST 72 HOURS PRIOR TO BEGINNING CONSTRUCTION

CAUTION:
THE CONTRACTOR IS SPECIFICALLY CAUTIONED THAT UNDERGROUND UTILITIES INCLUDING GAS ARE KNOWN TO EXIST IN THE VICINITY OF THIS WORK. CONTRACTOR SHALL CALL FOR LOCATES PRIOR TO BEGINNING WORK AND SHALL EXERCISE CAUTION WHEN INSTALLING SIGNAL EQUIPMENT INCLUDING POLE FOUNDATIONS AND CONDUITS

DESIGN

STATE OF TEXAS — COURTNEY B. CLARK — 131754 — LICENSED PROFESSIONAL ENGINEER

Courtney Clark 12/6/2022
COURTNEY B. CLARK, P.E. — DATE

APPROVAL

STATE OF TEXAS — GILMER D. GASTON — 80472 — LICENSED PROFESSIONAL ENGINEER

Gilmer D. Gaston 12/6/2022
GILMER D. GASTON, P.E. — DATE

0 15 30 45
SCALE: 1" = 30'

REV. NO.	DATE	DESCRIPTION	BY

PAPE-DAWSON ENGINEERS
SAN ANTONIO I AUSTIN I HOUSTON I FORT WORTH I DALLAS
2000 NW LOOP 410 I SAN ANTONIO, TX 78213 I 210.375.9000
TEXAS ENGINEERING FIRM #470 I TEXAS SURVEYING FIRM #10028800

Texas Department of Transportation ©2022

SH 211 AT LAMBDA DRIVE

TRAFFIC SIGNAL LAYOUT

DGN:	FED. RD. DIV. NO.	STATE	FEDERAL AID PROJECT NO.			HIGHWAY NO.
CHK DGN:	6	TEXAS				SH0211
DWG:	DIST.	COUNTY	CONT. NO.	SECT. NO.	JOB NO.	SHEET NO.
CHK DWG:	SAT	BEXAR	3544	04		10

Plotted on: 12/6/2022

Design Filename: P:\89\46\24\Design\Transpo\Traffic\894624_TSIG.dgn

CONDUIT AND CONDUCTOR SCHEDULE

RUN NUMBER				01	02	03	04	05	06	07	08	09
CONDUIT SIZE (INCHES)				3	3	3	3	3	3	3	3	3
NUMBER OF CONDUITS				1	1	1	1	1	1	1	1	1
LENGTH OF RUN (FT)				30	60	145	100	20	110	10	170	10
TRENCH (T)/BORE (B)/EXISTING (E)/AERIAL (A)				E	E	E	E	E	E	E	E	E
CABLE	CIRCUIT			NUMBER OF CONDUCTORS								
7 COND. #12 AWG TYPE "A"	VEHICLE SIGNALS	ø	3	1			1			1	1	
ETHERNET	CCTV (PTZ) CAMERA	POLE	C	1	1							
6 COND. POWER & DATA	RPDD	POLE	D	1			1					1

POLE SCHEDULE

POLE				C	D	E	F
POLE TYPE (SMA/LMA/DMA/PED)				SMA	SMA	SMA	SMA
POLE HEIGHT (FEET)				30	30	30	30
MAST ARM LENGTH (FEET)				48	48	48	44
LUMINAIRE (YES/NO)				YES	YES	YES	YES
FOUNDATION TYPE				36-A	36-A	36-A	36-A
CABLE	CIRCUIT			NUMBER OF CONDUCTORS			
7 COND. #12 AWG TYPE "A"	VEHICLE SIGNALS	ø	3			1	1
ETHERNET	CCTV (PTZ) CAMERA	POLE	C	1			
6 COND. POWER & DATA	RPDD	POLE	D		1		

CONTRACTOR SHALL USE EXISTING CABLEING FOR POLE F SIGNAL HEAD REPLACEMENT

POLE & EQUIPMENT INFORMATION

ID	DESCRIPTION/ATTACHMENTS
A	EXISTING TIMBER POLE MOUNTED ELECTRIC SERVICE (TL-1) TO REMAIN.
B	EXISTING TxDOT CONTROLLER ASSEMBLY ON FOUNDATION TO REMAIN. INSTALL TxDOT COMMUNICATION PACKAGE.
C	EXISTING 30 FT SMA-80 ON DRILLED SHAFT FND. (36-A) WITH 48 FT MAST ARM, ONE LUMINAIRE (LED), ONE RADD, ONE RPDD, ONE WIND DAMPER ASSEMBLY, ONE STREET NAME SIGN, AND FOUR VEHICLE SIGNAL HEADS AS INDICATED ON LAYOUT. RELOCATE EXISTING RPDD TO POLE D. INSTALL CCTV CAMERA.
D	EXISTING 30 FT SMA-80 ON DRILLED SHAFT FND. (36-A) WITH 48 FT MAST ARM, ONE LUMINAIRE (LED), ONE RPDD, ONE WIND DAMPER ASSEMBLY, ONE STREET NAME SIGN, ONE R10-17T SIGN, AND THREE VEHICLE SIGNAL HEADS AS INDICATED ON LAYOUT. INSTALL EXISTING RPDD FROM POLE C.
E	EXISTING 30 FT SMA-80 ON DRILLED SHAFT FND. (36-A) WITH 48 FT MAST ARM, ONE LUMINAIRE (LED), ONE RADD, ONE RPDD, ONE WIND DAMPER ASSEMBLY, ONE STREET NAME SIGN, AND THREE VEHICLE SIGNAL HEADS AS INDICATED ON LAYOUT. INSTALL LEFT-TURN SIGNAL HEAD FOR EASTBOUND APPROACH ON POLE.
F	EXISTING 30 FT SMA-80 ON DRILLED SHAFT FND. (36-A) WITH 44 FT MAST ARM, ONE LUMINAIRE (LED), ONE RPDD, ONE WIND DAMPER ASSEMBLY, ONE STREET NAME SIGN, ONE R10-17T SIGN, ONE R3-5R SIGN, AND THREE VEHICLE SIGNAL HEADS AS INDICATED ON LAYOUT. REMOVE 4-SECTION FYA SIGNAL HEAD AND R10-17T SIGN. INSTALL 3-SECTION PROTECTED LEFT-TURN SIGNAL HEAD AND R3-5L SIGN.

EXISITNG ELECTRICAL SERVICE DATA

Elec. Service ID	Electrical Service Description (see ED (5) - 14)	Service Conduit Size	Service Conductors No./Size	Safety Switch Amps	Main Ckt. Bkr. Pole / Amp	Two - Pole Contactor Amps	Panelbd/ Load center Amp Rating	Circuit No.	Branch Ckt. Bkr. Pole / Amps	Branch Circuit Amps	KVA Load
TL-1	ELEC SERV TY D (120/240)070(NS)AL(E)TP(O)	3"	3/#6	N/A	2P/70	30	100	A(SIGNAL) B(LUM)	1P/50 1P/20	40 5	7.1

DESIGN

STATE OF TEXAS
COURTNEY B. CLARK
131754
LICENSED
PROFESSIONAL ENGINEER

Courtney Clark 12/6/2022
COURTNEY B. CLARK, P.E. DATE

APPROVAL

STATE OF TEXAS
GILMER D. GASTON
80472
LICENSED
PROFESSIONAL ENGINEER

Gilmer D. Gaston 12/6/2022
GILMER D. GASTON, P.E. DATE

REV. NO.	DATE	DESCRIPTION	BY

PAPE-DAWSON ENGINEERS
SAN ANTONIO I AUSTIN I HOUSTON I FORT WORTH I DALLAS
2000 NW LOOP 410 I SAN ANTONIO, TX 78213 I 210.375.9000
TEXAS ENGINEERING FIRM #470 I TEXAS SURVEYING FIRM #10028800

Texas Department of Transportation ©2022

SH 211 AT LAMBDA DRIVE

TRAFFIC SIGNAL DETAILS

DGN:	FED. RD. DIV. NO.	STATE	FEDERAL AID PROJECT NO.			HIGHWAY NO.
CHK DGN:	6	TEXAS				SH0211
DWG:	DIST.	COUNTY	CONT. NO.	SECT. NO.	JOB NO.	SHEET NO.
CHK DWG:	SAT	BEXAR	3544	04		11

Plotted on: 12/6/2022
Design Filename: P:\89\46\24\Design\Transpo\Traffic\894624_TSIG_DET.dgn

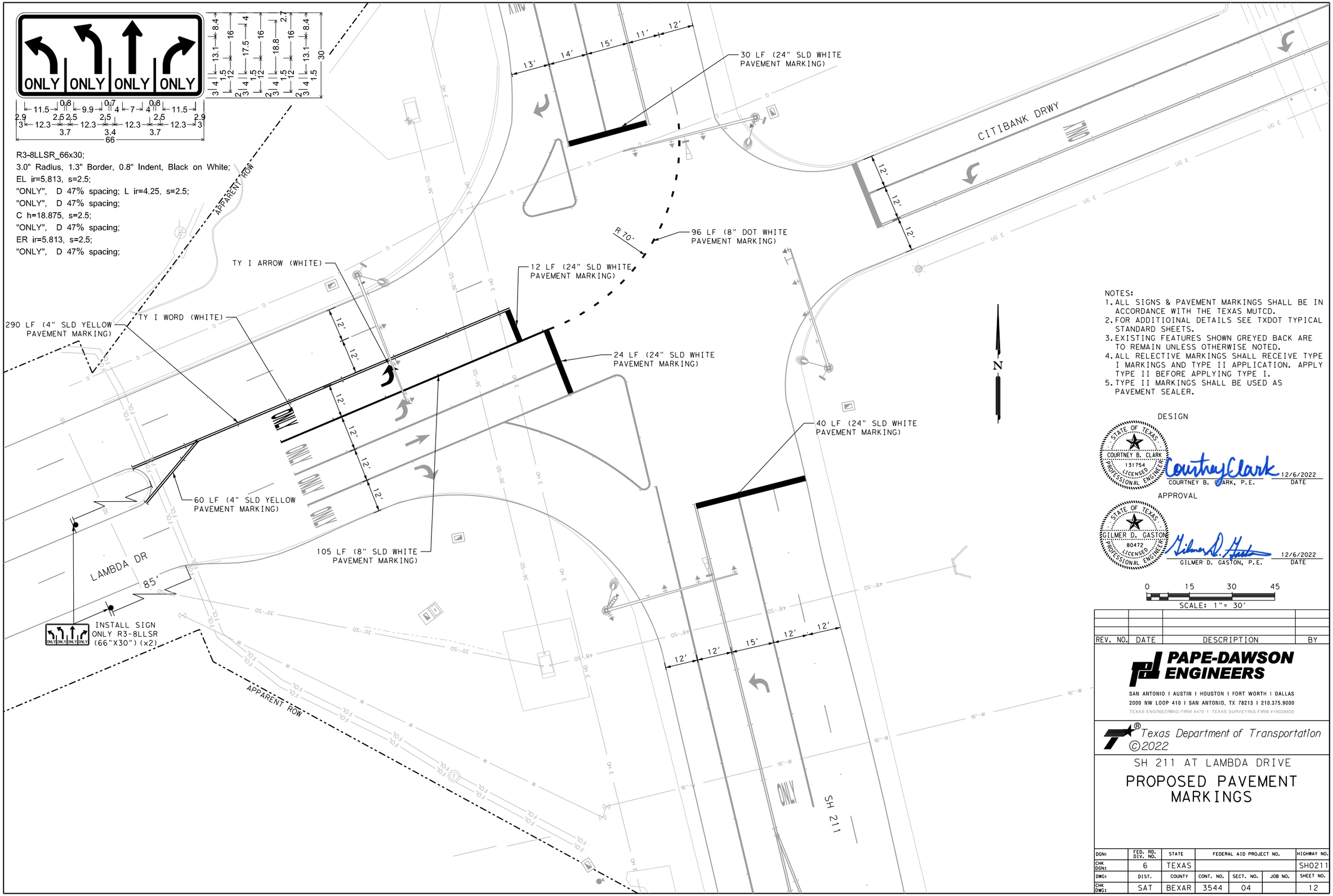

NOTES:
1. ALL SIGNS & PAVEMENT MARKINGS SHALL BE IN ACCORDANCE WITH THE TEXAS MUTCD.
2. FOR ADDITIOINAL DETAILS SEE TXDOT TYPICAL STANDARD SHEETS.
3. EXISTING FEATURES SHOWN GREYED BACK ARE TO REMAIN UNLESS OTHERWISE NOTED.
4. ALL RELECTIVE MARKINGS SHALL RECEIVE TYPE I MARKINGS AND TYPE II APPLICATION. APPLY TYPE II BEFORE APPLYING TYPE I.
5. TYPE II MARKINGS SHALL BE USED AS PAVEMENT SEALER.

DESIGN

STATE OF TEXAS
COURTNEY B. CLARK
131754
LICENSED PROFESSIONAL ENGINEER

Courtney Clark 12/6/2022
COURTNEY B. CLARK, P.E. DATE

APPROVAL

STATE OF TEXAS
GILMER D. GASTON
80472
LICENSED PROFESSIONAL ENGINEER

Gilmer D. Gaston 12/6/2022
GILMER D. GASTON, P.E. DATE

0 15 30 45
SCALE: 1"= 30'

REV. NO.	DATE	DESCRIPTION	BY

PAPE-DAWSON ENGINEERS
SAN ANTONIO I AUSTIN I HOUSTON I FORT WORTH I DALLAS
2000 NW LOOP 410 I SAN ANTONIO, TX 78213 I 210.375.9000
TEXAS ENGINEERING FIRM #470 I TEXAS SURVEYING FIRM #10028800

Texas Department of Transportation ©2022

SH 211 AT LAMBDA DRIVE

PROPOSED PAVEMENT MARKINGS

DGN:	FED. RD. DIV. NO.	STATE	FEDERAL AID PROJECT NO.			HIGHWAY NO.
CHK DGN:	6	TEXAS				SH0211
DWG:	DIST.	COUNTY	CONT. NO.	SECT. NO.	JOB NO.	SHEET NO.
CHK DWG:	SAT	BEXAR	3544	04		12

Plotted on: 12/6/2022

Design Filename: P:\89\46\24\Design\Transpo\Traffic\894624_PROP_PVMRK.dgn

DISCLAIMER:
The use of this standard is governed by the "Texas Engineering Practice Act". No warranty of any kind is made by TxDOT for any purpose whatsoever. TxDOT assumes no responsibility for the conversion of this standard to other formats or for incorrect results or damages resulting from its use.

DATE: 12/6/2022 5:50:00 PM
FILE: P:\89\46\24\Design\Transpo\Standards\ed1-14.dgn

GENERAL NOTES FOR ALL ELECTRICAL WORK

1. The location of all conduits, junction boxes, ground boxes, and electrical services is diagrammatic and may be shifted to accommodate field conditions.

2. Provide new and unused materials. Ensure that all materials and installations comply with the applicable articles of the National Electrical Code (NEC), TxDOT standards and specifications, National Electrical Manufacturers Association (NEMA), and are listed by Underwriters Laboratories (UL) or a Nationally Recognized Testing Lab (NRTL). NRTLs such as Canadian Standard Association (CSA), Intertek Testing Services NA Inc., or FM Approvals LLC can be considered equivalent to UL. Where reference is made to NEMA listed devices, International Electrotechnical Commission (IEC) listed devices will not be considered an acceptable equal to a NEMA listed device. Acceptable devices may have both a NEMA and IEC listing. Faulty fabrication or poor workmanship in any material, equipment, or installation is justification for rejection. Replace or reinstall rejected material or equipment at no additional cost to the Department.

3. Miscellaneous nuts, bolts and hardware, except for high strength bolts, may be stainless steel when plans specify galvanized, provided the bolt size is ½ in. or less in diameter.

4. Provide the following test equipment as required by the Engineer to confirm compliance with the contract and the NEC: voltmeter, ammeter, megohm meter (1000 volt DC), ground resistance tester, torque wrenches, and torque screwdrivers. Ensure all equipment has been properly calibrated within the last year. Provide calibration certification to the Engineer upon request. Operate test equipment during inspection as requested by the Engineer.

5. Install grounding as shown on the plans and in accordance with the NEC. Ensure all metallic conduits; metal poles; luminaires; and metal enclosures are bonded to the equipment grounding conductor. Provide stranded bare copper or green insulated grounding conductors. Ground rods, connectors, and bonding jumpers are subsidiary to the various bid items.

6. When required by the Engineer, notify the Department in writing of materials from the Material Producers List (MPL) intended for use on each project. Prequalified materials are listed on the MPL on TxDOT's website under "Roadway Illumination and Electrical Supplies." No substitutions will be allowed for materials on this list.

CONDUIT

A. MATERIALS

1. Provide conduit, junction boxes, fittings, and hardware as per TxDOT Departmental Material Specification (DMS) 11030 "Conduit" and Item 618 "Conduit" of TxDOT's "Standard Specifications For Construction And Maintenance Of Highways, Streets, And Bridges," latest edition. Provide conduits listed under Item 618 on the MPL under "Roadway Illumination and Electrical Supplies." Provide conduit types according to the descriptive code or as shown on the plans. Do not substitute other types of conduits for those shown. Provide liquidtight flexible metal conduit (LFMC) when flexible conduit is called for on galvanized steel rigid metallic conduit (RMC) systems. Provide liquidtight flexible nonmetallic conduit (LFNC) when flexible conduit is called for on polyvinyl chloride (PVC) systems.

2. Provide galvanized steel RMC for all exposed conduits, unless otherwise shown on the plans. Properly bond all metal conduits.

3. Unless otherwise shown on the plans, provide junction boxes with a minimum size as shown in the following table, which applies to the greatest number of conductors entering the box through one conduit with no more than four conduits per box. When a mixture of conductor sizes is present, count the conductors as if all are of the larger size. For situations not applicable to the table, size junction boxes in accordance with NEC.

AWG	3 CONDUCTORS	5 CONDUCTORS	7 CONDUCTORS
#1	10" x 10" x 4"	12" x 12" x 4"	16" x 16" x 4"
#2	8" x 8" x 4"	10" x 10" x 4"	12" x 12" x 4"
#4	8" x 8" x 4"	10" x 10" x 4"	10" x 10" x 4"
#6	8" x 8" x 4"	8" x 8" x 4"	10" x 10" x 4"
#8	8" x 8" x 4"	8" x 8" x 4"	8" x 8" x 4"

4. Junction boxes with an internal volume of less than 100 cu. in. and supported by entering raceways must have threaded entries or hubs identified for the intended purpose and supported by connection of two or more rigid metal conduits. Secure conduit within 3 ft. of the enclosure or within 18 in. of the enclosure if all conduit entries are on the same side. Mechanically secure all junction boxes with an internal volume greater than 100 cu. inches.

5. Provide hot dipped galvanized cast iron or sand cast aluminum outlet boxes for junction boxes containing only 10 AWG or 12 AWG conductors. Do not use die cast aluminum boxes. Size outlet boxes according to the NEC.

6. Do not use intermediate metal conduit (IMC) or electrical metallic tubing (EMT) unless specifically required by the plan sheets. When EMT is called for, provide junction boxes made from galvanized steel sheeting, listed and approved for outdoor use, unless otherwise noted on the plans. Size all galvanized steel junction boxes in accordance with the NEC. Provide junction boxes for IMC conduit systems that meet the same requirements for junction boxes used with RMC systems.

7. Provide PVC junction boxes intended for outdoor use on PVC conduit systems, unless otherwise noted on the plans.

8. Provide PVC elbows in PVC conduit systems, unless otherwise shown on the plans. Use only a flat, high tensile strength polyester fiber pull tape for pulling conductors through the PVC conduit system. When galvanized steel RMC elbows are specifically called for in the plans and any portion of the RMC elbow is buried less than 18 in., ground the RMC elbow by means of a grounding bushing on a rigid metal extension. Grounding of the rigid metal elbow is not required if the entire RMC elbow is encased in a minimum of 2 in. of concrete. PVC extensions are allowed on these concrete encased rigid metal elbows. RMC or PVC elbows are subsidiary to various bid items.

9. When required, provide High-Density Polyethylene (HDPE) conduit with factory installed internal conductors according to Item 622 "Duct Cable." At the Contractor's request and with approval by the Engineer, substitute HDPE conduit with no conductors for bored schedule 40 or schedule 80 PVC conduit bid under Item 618. Ensure bored HDPE substituted for PVC is schedule 40 and of the same size PVC called for in the plans. Ensure the substituted HDPE meets the requirements of Item 622, except that the conduit is supplied without factory-installed conductors. Make the transition of the HDPE conduit to PVC (or RMC elbow when required) at the bore pit. Provide conduit of the size and schedule as shown on the plans. Do not extend substituted conduit into ground boxes or foundations. Provide PVC or galvanized steel RMC elbows as called for at all ground boxes and foundations.

10. Use two-hole straps when supporting 2 in. and larger conduits. On electrical service poles, properly sized stainless steel or hot dipped galvanized one-hole standoff straps are allowed on the service riser conduit.

B. CONSTRUCTION METHODS

1. Provide and install expansion joint conduit fittings on all structure-mounted conduits at the structure's expansion joints to allow for movement of the conduit. In addition, provide and install expansion joint fittings on all continuous runs of galvanized steel RMC conduit externally exposed on structures such as bridges at maximum intervals of 150 ft. When requested by the project Engineer, supply manufacturer's specification sheet for expansion joint conduit fittings. Repair or replace expansion joint fittings that do not allow for movement at no additional cost to the Department. Provide the method of determining the amount of expansion to the Engineer upon request. Do not use LFMC or LFNC as a substitute for the required expansion conduit fittings.

2. Space all conduit supports at maximum intervals of 5 ft. Install conduit spacers when attaching metal conduit to surface of concrete structures. See "Conduit Mounting Options" on ED(2). Install conduit support within 3 ft. of all enclosures and conduit terminations.

3. Do not attach conduit supports directly to pre-stressed concrete beams except as shown specifically in the plans or as approved by the Engineer.

4. Unless otherwise shown on the plans, jack or bore conduit placed beneath existing roadways, driveways, sidewalks, or after the base or surfacing operation has begun. Backfill and compact the bore pits below the conduit per Item 476 "Jacking, Boring, or Tunneling Pipe or Box" prior to installing conduit or duct cable to prevent bending of the connections.

5. When placing conduit in the sub-grade of new roadways, backfill all trenches with excavated material unless otherwise noted on the plans. When placing conduit in the sub-base of new roadways, backfill all trenches with cement-stabilized base as per requirements of Items 110 "Excavation", 400 "Excavation and Backfill for Structures", 401 "Flowable Backfill", 402 "Trench Excavation Protection", and 403 "Temporary Special Shoring."

6. Provide and place warning tape approximately 10 in. above all trenched conduit as per Item 618.

7. During construction, temporarily cap or plug open ends of all conduit and raceways immediately after installation to prevent entry of dirt, debris and animals. Temporary caps constructed of durable duct tape are allowed. Tightly fix the tape to the conduit opening. Clean out the conduit and prove it clear in accordance with Item 618 prior to installing any conductors.

8. Ensure conduit entry into the top of any enclosure is waterproof by installing conduit sealing hubs or using boxes with threaded bosses. This includes surface mounted safety switches, meter cans, service enclosures, auxiliary enclosures and junction boxes. Grounding bushings on water tight sealing hubs are not required.

9. Fit the ends of all PVC conduit terminations with bushings or bell end fittings. Provide and install a grounding type bushing on all metal conduit terminations.

10. Install a bonding jumper from each grounding bushing to the nearest ground rod, grounding lug, or equipment grounding conductor. Ensure all bonding jumpers are the same size as the equipment grounding conductor. Bonding of conduit used as a casing under roadways for duct cable is not required, if the duct extends the full length through the casing.

11. At all electrical services, install a 6 AWG solid copper grounding electrode conductor.

12. Place conduits entering ground boxes so that the conduit openings are between 3 in. and 6 in. from the bottom of the box. See the ground box detail on sheet ED(4).

13. Seal ends of all conduits with duct seal, expandable foam, or by other methods approved by the Engineer. Seal conduit immediately after completion of conductor installation and pull tests. Do not use duct tape as a permanent conduit sealant. Do not use silicone caulk as a conduit sealant.

14. File smooth the cut ends of all mounting strut and conduit. Before installing, paint the field cut ends of all mounting strut and RMC (threaded or non-threaded) with zinc rich paint (94% or more zinc content) to alleviate overspray. Use zinc rich paint to touch up galvanized material as allowed under Item 445 "Galvanizing." Do not paint non-galvanized material with a zinc rich paint as an alternative for materials required to be galvanized.

Texas Department of Transportation

Traffic Operations Division Standard

ELECTRICAL DETAILS CONDUITS & NOTES

ED(1)-14

FILE: ed1-14.dgn	DN:	CK:	DW:	CK:
©TxDOT October 2014	CONT	SECT	JOB	HIGHWAY
REVISIONS	3544	04		SH0211
	DIST		COUNTY	SHEET NO.
	SAT		BEXAR	13

DISCLAIMER:
The use of this standard is governed by the "Texas Engineering Practice Act". No warranty of any kind is made by TxDOT for any purpose whatsoever. TxDOT assumes no responsibility for the conversion of this standard to other formats or for incorrect results or damages resulting from its use.

DATE: 12/6/2022 5:50:01 PM
FILE: P:\89\46\24\Design\Transpo\Standards\ed3-14.dgn

ELECTRICAL CONDUCTORS

A. MATERIAL INFORMATION

1. Provide Type XHHW insulated conductors in accordance with Departmental Material Specification (DMS)11040 "Conductors" and Item 620 "Electrical Conductors." Provide conductors as listed on the Material Producers List (MPL) on the Department web site under "Roadway Illumination and Electrical Supplies" Item 620. Color code insulated conductors in conformance with the NEC. Identify grounded (neutral) conductors with white insulation. Identify grounding conductors (ground wires) with green insulation or bare conductors. Identify ungrounded (hot) conductors with any color insulation except green, white, or gray. Keep color scheme consistent throughout the wiring system. Identify conductors 6 American Wire Gauge (AWG) and smaller by continuous color jacket. Identify electrical conductors 4 AWG and larger by continuous color jacket or by colored tape. When identifying conductors with colored tape, mark at least 6 in. of the conductor's insulation with half laps of tape.

2. Provide a solid copper 6 AWG grounding electrode conductor to bond the electrical service equipment to the concrete encased grounding electrode or the ground rod at the service location. Connect the grounding electrode conductor to the ground rod with a UL listed connector in accordance with DMS 11040. Connect the grounding electrode conductor to the concrete encased grounding electrode as shown in the plans.

3. Where two or more circuits are present in one conduit or enclosure, permanently identify the conductors of each branch circuit by attaching a non-metallic tag around both circuit conductors at each accessible location. Provide tags with two straps, large enough to indicate circuit number, letter, or other identification as shown in the plans. Print circuit identification on the tag with a permanent marker.

4. Use listed compression or screw type pressure connectors, terminal blocks, or split bolt connectors for splicing as specified in DMS 11040. Use hot melt adhesive tape to fill the gap and seal the ends of heat shrink tubing. Provide UL listed gel-filled insulating splice covers. Splicing materials, insulating materials, breakaway disconnects, splice covers, and fuse holders are subsidiary to various bid items.

B. CONSTRUCTION METHODS

1. Use only a flat, high tensile strength polyester fiber pull tape for pulling conductors through the conduit system. After installing conductors in conduit, perform conductor pull test. If a conductor cannot be freely pulled, make any needed alterations or repairs at no additional cost to the department. Perform insulation resistance tests in accordance with Item 620. Coordinate with the Engineer to witness the tests.

2. Leave 2 ft. minimum, 3 ft. maximum length for each conductor up to the splice in ground boxes. Leave 3 ft. minimum, 4 ft. maximum length of conductor in ground boxes when pulled through with no splice. Leave 1 ft. minimum, 1.5 ft. maximum length of conductor at enclosures, weatherheads and pole bases.

3. Make splices only in junction boxes, ground boxes, pole bases, or electrical enclosures and use only listed compression or screw type pressure connectors, terminal blocks, or split bolt connectors. Insulate splices with heavy wall heat shrink tubing or gel-filled insulating splice covers to provide a watertight splice. Overlap conductor insulation with heat shrink tubing a minimum of 2 in. past both sides of the splice. Where heat shrink tubing may not shrink sufficiently to provide a watertight seal around the individual conductors, prior to heating the tubing, increase the diameter of the conductor insulation using hot melt adhesive tape to provide a watertight seal between the individual conductors and the heat shrink tubing. Ensure the tape extends past the heat shrink tubing. Use hot melt adhesive tape to fill the gap and seal the ends of heat shrink tubing. Heat shrink tubing that appears to have been burned, or overheated, is considered defective and must be replaced.

4. Size and install gel-filled insulating splice covers according to manufacturer's specifications when used in place of heat shrink tubing.

5. Wire nuts with factory applied waterproof sealant may be used for 8 AWG or smaller conductors in above ground junction boxes, but not in pole bases or ground boxes. Install wire nuts in an upright position to prevent the accumulation of water.

6. Support conductors in illumination poles with a J-hook at the top of the pole.

7. When terminating conductors, remove the insulation and jacketing material without nicking the individual strands of the conductor. Conductors with nicked individual conductor strands or removed strands will be considered damaged.

8. Replace conductors and cables that are damaged beyond repair or that fail an insulation resistance test at no additional cost to the department.

9. Do not repair damaged conductors with duct tape, electrical tape, or wire nuts. Use only approved splicing methods.

10. Do not terminate more than one conductor under a single connector, unless the connector is rated for multiple conductors. Do not exceed the pressure connector's listing for maximum number and size of conductors allowed.

11. Install breakaway connectors on conductors bid under Item 620 whenever those conductors pass through a breakaway support device. Follow manufacturer's instructions when terminating conductors to breakaway connectors. Properly torque threaded connections. Proper terminations are critical to the safe operation of breakaway devices. Trim waterproofing boots on breakaway connectors to fit snugly around the conductor to ensure waterproof connection. Only one conductor may enter a single opening in a boot. Provide waterproof boots with the correct number of openings. Leave unused openings factory sealed. Use prequalified breakaway connectors as shown on the MPL.

12. Provide and install a separate stranded equipment grounding conductor (EGC) in all conduits that contain circuit wiring of 50 volts or more. Unless shown elsewhere, size the EGC to be the same size as the largest current carrying conductor contained in the conduit. Ensure all EGCs are bonded together at every accessible location. For traffic signal installations, provide a minimum size 8 AWG EGC. The EGC is paid for under Item 620.

C. TEMPORARY WIRING

1. Install temporary conductors and electrical equipment in accordance with the NEC article "Temporary Installations" and Department standard sheets.

2. Provide a ground fault circuit interrupter (GFCI) for power outlets for portable electrical equipment, power tools, ice machines, ice storage bins and refrigerators located outdoors at grade. GFCI may be any one of the following: molded cord and plug set, receptacle, or circuit breaker type.

3. Use listed wire nuts with factory applied sealant for temporary wiring where approved.

4. Enclose conductor splices within a listed enclosure or ground box, or ensure the splices are more than 10 ft. above grade vertically and more than 5 ft. horizontally from any metal structure. Where installing temporary conductors in areas subject to vehicle traffic or mobile construction equipment, ensure the vertical clearance to ground is at least 18 ft. when measured at the lowest point. Ground messenger wires that support power conductors in conformance with the NEC.

5. Protect and when necessary repair any existing electrical conduits uncovered during the construction process in a timely manner and in conformance with the NEC.

GROUND RODS & GROUNDING ELECTRODES

A. MATERIAL INFORMATION

1. Provide and install a grounding electrode at electrical services. Provide ground rods according to DMS 11040 and the plans. Larger diameter or longer length rods may be called for in some specific locations, see the individual plans sheets. Concrete encased grounding electrodes may be called for in specific locations including electrical service, see individual plan sheets.

B. CONSTRUCTION METHODS

1. Furnish auxiliary ground rods for lightning protection and install in soil, concrete, or both, as called for in the plans. For ground rods installed in concrete, ensure the connection of the conductor to the ground rod is readily accessible for inspection or repairs. For ground rods installed in soil, ensure that the upper end is between 2 to 4 in. below finished grade.

2. Do not place ground rods in the same drilled hole as a timber pole.

3. Install ground rods so the imprinted part number is at the upper end of the rod.

4. Remove all non-conductive coatings such as concrete splatter from the rod at the clamp location.

5. Route all conductors as short and straight as possible for connection to lightning protection ground rods. When a bend is required, ensure a minimum radius bend of four inches for these conductors.

6. Unless otherwise called for in the plans, protect grounding electrode conductors with non-metallic conduit. When protecting grounding electrode conductors with metal conduit, provide and install a grounding type bushing and properly sized bonding jumper on each end of the metal conduit.

7. Written authorization is required before installing a ground rod in a horizontal trench for rocky soil or a solid rock bottom.

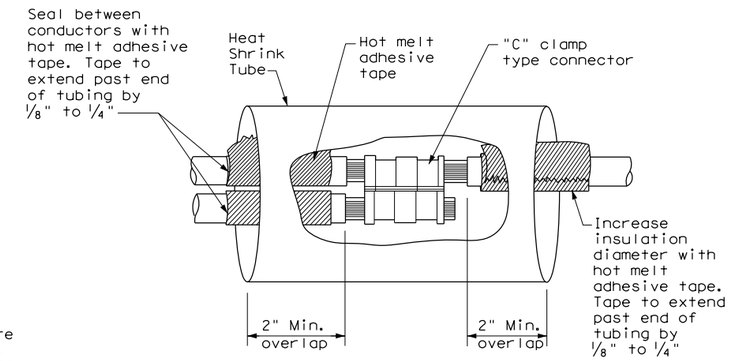

SPLICE OPTION 1
Compression Type

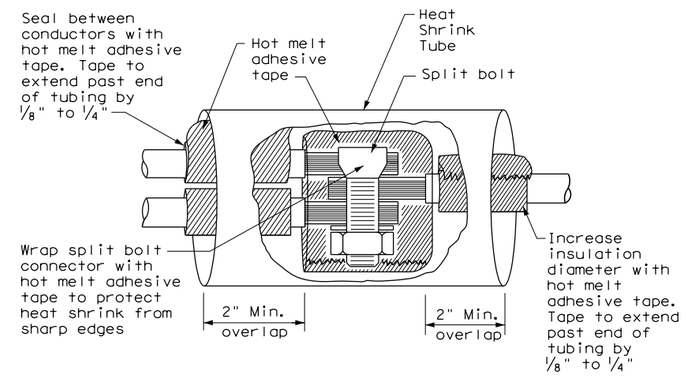

SPLICE OPTION 2
Split Bolt Type

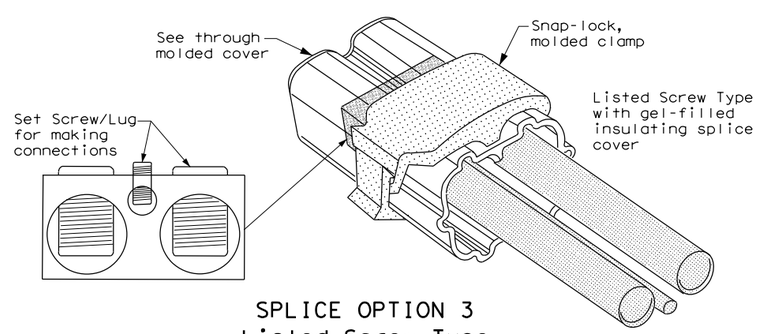

SPLICE OPTION 3
Listed Screw Type

Texas Department of Transportation
Traffic Operations Division Standard

ELECTRICAL DETAILS CONDUCTORS

ED(3)-14

FILE: ed3-14.dgn	DN: TxDOT	CK: TxDOT	DW: TxDOT	CK: TxDOT
© TxDOT October 2014	CONT	SECT	JOB	HIGHWAY
REVISIONS	3544	04		SH0211
	DIST		COUNTY	SHEET NO.
	SAT		BEXAR	14

71C

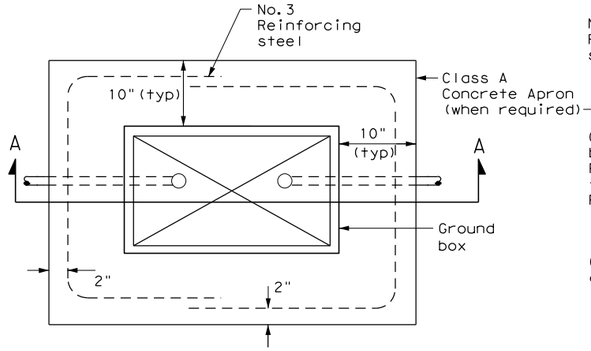

PLAN VIEW

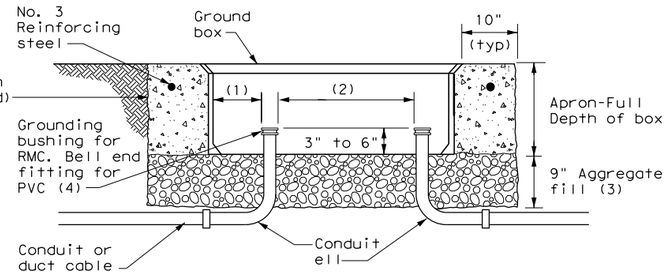

SECTION A - A

APRON FOR GROUND BOX

(1) Uniformly space ends of conduits within the ground box. Position ends of conduits so that ground box walls do not interfere with the installation of grounding bushings or bell end fittings.

(2) Maintain sufficient space between conduits to allow for proper installation of bushing.

(3) Place aggregate under the box, not in the box. Aggregate should not encroach on the interior volume of the box.

(4) Install a grounding bushing on the upper end of all RMC terminating in a ground box. Ground RMC elbows when any part of the elbow is less than 18 in. below the bottom of the ground box. Install a PVC bushing or bell end fitting on the upper end of all PVC conduits terminating in a ground box.

GROUND BOX DIMENSIONS	
TYPE	OUTSIDE DIMENSIONS (INCHES) (Width x Length X Depth)
A	12 X 23 X 11
B	12 X 23 X 22
C	16 X 29 X 11
D	16 X 29 X 22
E	12 X 23 X 17

GROUND BOX COVER DIMENSIONS								
TYPE	DIMENSIONS (INCHES)							
	H	I	J	K	L	M	N	P
A, B & E	23 1/4	23	13 3/4	13 1/2	9 7/8	5 1/8	1 3/8	2
C & D	30 1/2	30 1/4	17 1/2	17 1/4	13 1/4	6 3/4	1 3/8	2

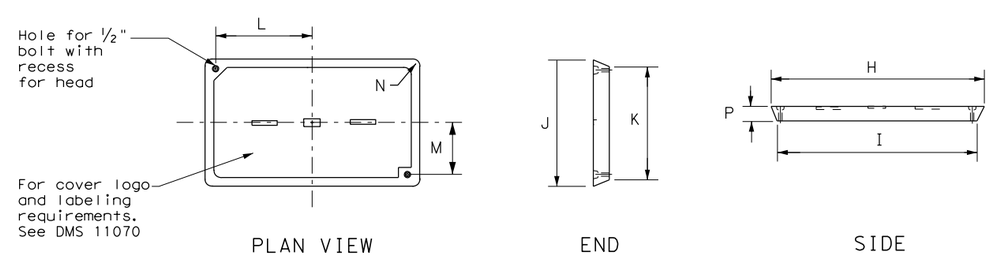

PLAN VIEW END SIDE

GROUND BOX COVER

GROUND BOXES

A. MATERIALS

1. Provide polymer concrete ground boxes measuring 16x30x24 in. (WxLxD) or smaller in accordance with Departmental Material Specification (DMS) 11070 "Ground Boxes" and Item 624 "Ground Boxes."

2. Provide Type A, B, C, D, and E ground boxes as shown in the plans, and as listed on the Material Producers List (MPL) on the Department web site under "Roadway Illumination and Electrical Supplies," Item 624.

3. Ensure ground box cover is correctly labeled in accordance with DMS 11070.

4. Provide larger ground boxes in accordance with Item 624 and as shown in the plans.

B. CONSTRUCTION METHODS

1. Remove all gravel and dirt from conduit. Cap all conduits prior to placing aggregate and setting ground box. Provide Grade 3 or 4 coarse aggregate as shown on Table 2 of Item 302 "Aggregates for Surface Treatments." Ensure aggregate bed is in place and at least 9 inches deep, prior to setting the ground box. Install ground box on top of aggregate.

2. Cast ground box aprons in place. Reinforcing steel may be field bent. Ensure the depth of concrete for the apron extends from finished grade to the top of the aggregate bed under the box. Ground box aprons, including concrete and reinforcing steel, are subsidiary to ground boxes when called for by descriptive code.

3. Keep bolt holes in the box clear of dirt. Bolt covers down when not working in ground boxes.

4. Install all conduits and ells in a neat and workmanlike manner. Uniformly space conduits so grounding bushings and bell end fittings can easily be installed.

5. Temporarily seal all conduits in the ground box until conductors are installed.

6. Permanently seal conduits immediately after the completion of conductor installation and pull tests. Permanently seal the ends of all conduits with duct seal, expandable foam, or other method as approved. Do not use duct tape as a permanent conduit sealant. Do not use silicone caulk as a sealant.

7. When a ground rod is present in a ground box, bond all equipment grounding conductors together and to the ground rod with listed connectors.

8. When a type B or D ground box is stacked to meet volume requirements, it is allowable to cut an appropriately sized hole for conduit entry in the side wall at least 18 inches below grade.

9. If an existing ground box in the contract has a metal cover, bond the cover to the equipment grounding conductor with a 3 ft. long stranded bonding jumper the same size as the grounding conductor. The bonding jumper is subsidiary to various bid items. Verify existing ground boxes with metal covers are shown on the plans, with notes fully describing the work required.

10. If other ground boxes with metal covers are within the project limits but are not part of the contract, the Engineer may direct the Contractor to bond the metal covers, identifying the specific boxes in writing. This work will be paid for separately.

11. Bond metal ground box covers to the grounding conductor with a tank ground type lug.

DISCLAIMER:
The use of this standard is governed by the "Texas Engineering Practice Act". No warranty of any kind is made by TxDOT for any purpose whatsoever. TxDOT assumes no responsibility for the conversion of this standard to other formats or for incorrect results or damages resulting from its use.

DATE: 12/6/2022 5:50:02 PM
FILE: P:\89\46\24\Design\Transpo\Standards\ed4-14.dgn

Texas Department of Transportation

Traffic Operations Division Standard

ELECTRICAL DETAILS GROUND BOXES

ED(4)-14

FILE: ed4-14.dgn	DN: TxDOT	CK: TxDOT	DW: TxDOT	CK: TxDOT
©TxDOT October 2014	CONT	SECT	JOB	HIGHWAY
REVISIONS	3544	04		SH0211
	DIST	COUNTY		SHEET NO.
	SAT	BEXAR		15

71D

TRAFFIC SIGNAL NOTES

1. Do not pass luminaire conductors through the signal controller cabinet.
2. Include an equipment grounding conductor in all conduits throughout the electrical system. Bond all exposed metal parts to the grounding conductor.
3. Provide roadway luminaires, when required, in accordance with the material and construction sections of Item 610, "Roadway Illumination Assemblies," except for performance testing of luminaires. Test installed roadway luminaires for proper operation as a part of the associated traffic signal system test.
4. If internally illuminated street name signs are approved for use, ground the fixture to the pole with a 12 AWG green XHHW conductor.
5. Bond anchor bolts to rebar cage in two locations using #3 bars or 6 AWG stranded copper conductors. Use listed mechanical connectors rated for embedment in concrete. See TXDOT standard TS-FD for further details.
6. Drill and tap signal poles for ½ in. X 13 UNC tank ground fitting. Provide and install tank ground fitting 4 in. to 6 in. directly below electrical service enclosure. Provide properly sized hole through the bottom of the enclosure for the service grounding electrode conductor. Connect the electrical service grounding electrode conductor to the tank ground fitting. Ensure electrical service grounding electrode conductor is as short and straight as possible from the enclosure to the tank ground fitting. See Inset A detail for further information. Size service entrance conduit and branch circuit conduit as shown in the plans.
7. Mount electrical service enclosure and meter to signal pole with stainless steel bands. Ensure bands are a minimum width of ¾ in. Secure enclosures to bands using two-bolt brackets. Install brackets near top and bottom of each enclosure. Install properly sized stainless steel washers on each bolt in the enclosure. Band or drill and tap properly sized stand-off straps to signal pole for attaching conduit.
8. Conduct pull tests and insulation resistance tests on all illumination and power conductors as required in Item 620 "Electrical Conductors" and ED(3). To prevent electronics damage, do not conduct insulation resistance tests on traffic signal cables after termination.
9. Lock all enclosures and bolt down all ground box covers before applying power to the signal installation.
10. Terminate conduits entering the top of enclosures with a conduit-sealing hub or threaded boss such as meter hub. Install a grounding bushing on all metal conduits not connected to conduit-sealing hub or threaded boss. Bond the grounding bushing to the ground bus with a bonding jumper. Seal all conduits entering enclosures with duct seal or expanding foam. Do not use silicone to seal conduit ends.
11. For all conduits, ensure the burial depth is a minimum of 18". Ensure the minimum burial depth for conduit placed under a roadway is 24".

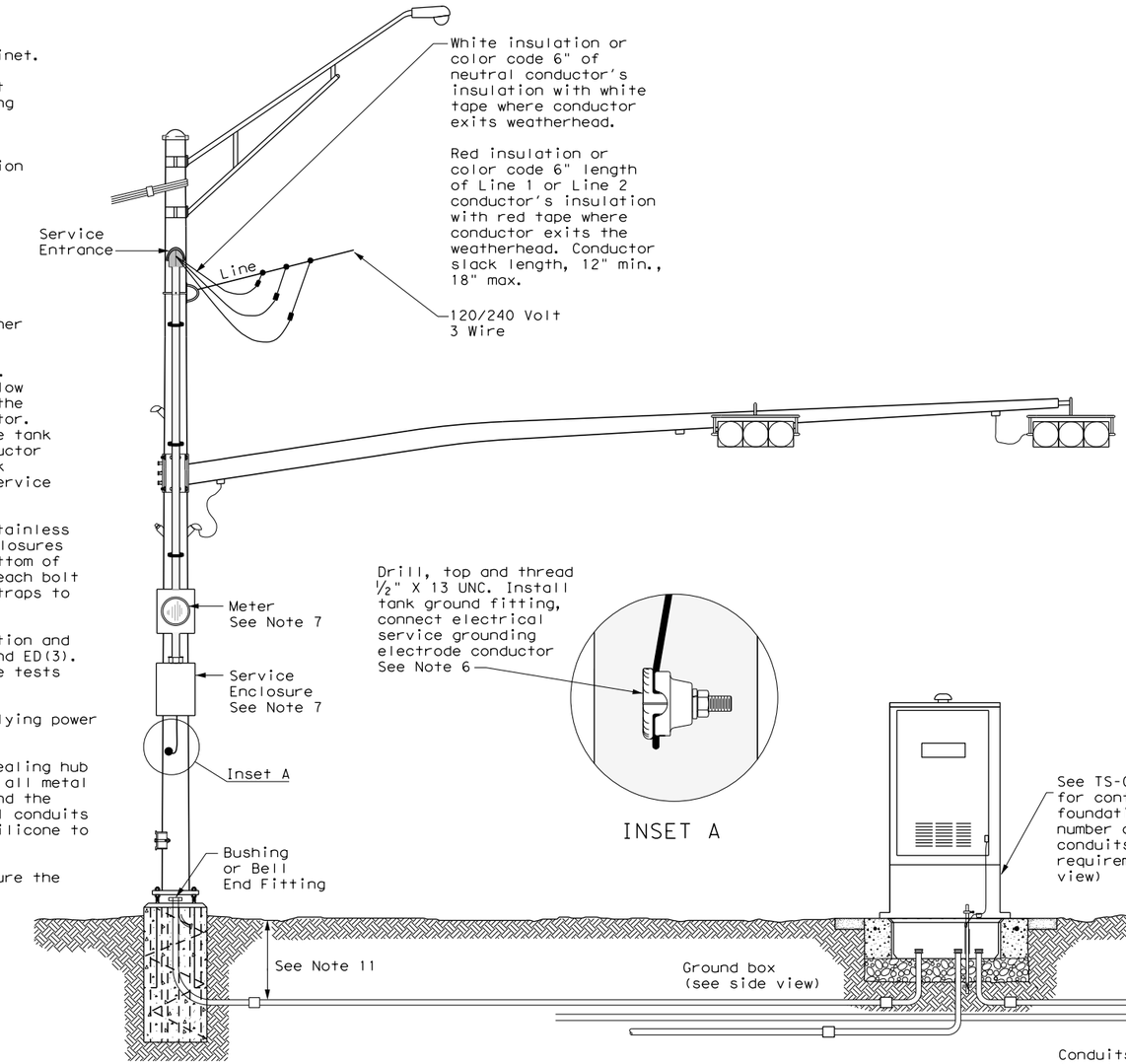

SIGNAL POLE WITH SERVICE

Type T electrical service mounted on signal pole shown as an example. See electrical details, layout sheets, and electrical service data chart for additional details.

INSET A

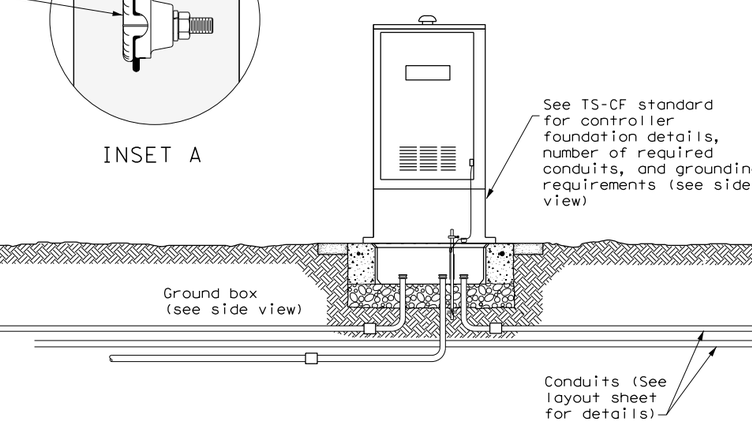

SIGNAL CONTROLLER FRONT VIEW

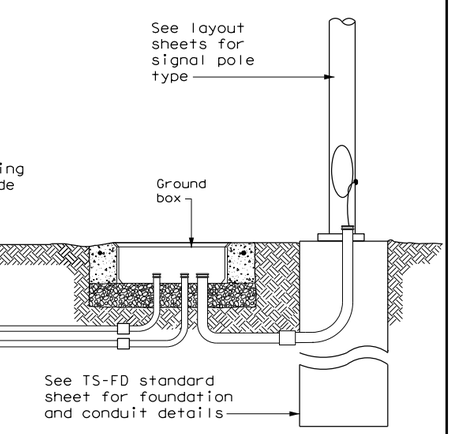

SIGNAL POLE

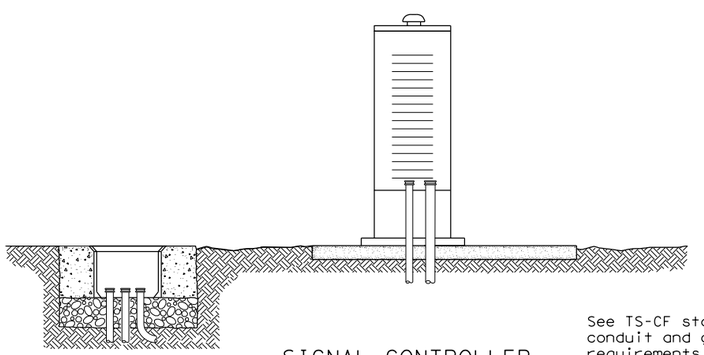

SIGNAL CONTROLLER SIDE VIEW

See TS-CF standard for conduit and grounding requirements. See layout sheets for ground box locations and any additional conduits that are required.

DISCLAIMER:
The use of this standard is governed by the "Texas Engineering Practice Act". No warranty of any kind is made by TxDOT for any purpose whatsoever. TxDOT assumes no responsibility for the conversion of this standard to other formats or for incorrect results or damages resulting from its use.

DATE: 12/6/2022 5:50:03 PM
FILE: P:\89461\24\Design\Transpo\Standards\ed8-14.dgn

Texas Department of Transportation — Traffic Operations Division Standard

ELECTRICAL DETAILS TYPICAL TRAFFIC SIGNAL SYSTEM DETAILS

ED(8)-14

FILE: ed8-14.dgn	DN: TxDOT	CK: TxDOT	DW: TxDOT	CK: TxDOT
© TxDOT October 2014	CONT	SECT	JOB	HIGHWAY
REVISIONS	3544	04		SH0211
	DIST		COUNTY	SHEET NO.
	SAT		BEXAR	16

71H

DISCLAIMER:
The use of this standard is governed by the "Texas Engineering Practice Act". No warranty of any kind is made by TxDOT for any purpose whatsoever. TxDOT assumes no responsibility for the conversion of this standard to other formats or for incorrect results or damages resulting from its use.

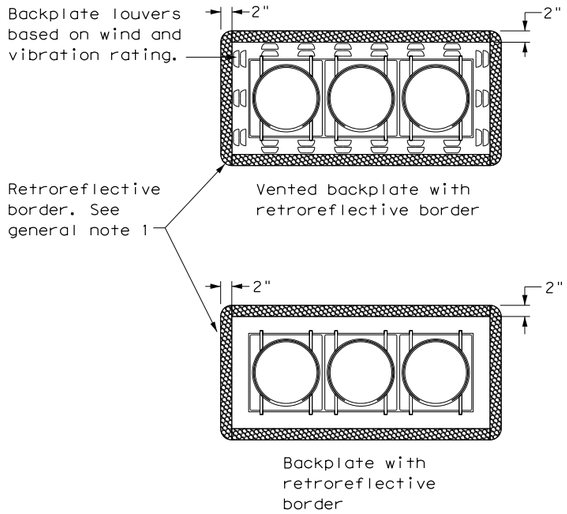

THREE-SECTION HEAD
HORIZONTAL OR VERTICAL

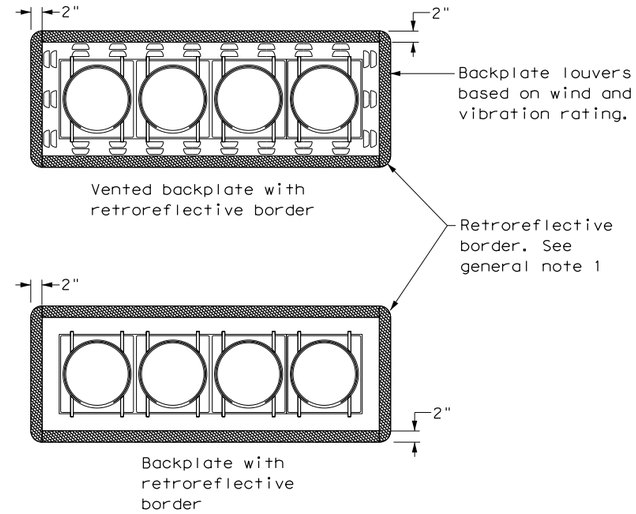

FOUR-SECTION HEAD
HORIZONTAL OR VERTICAL

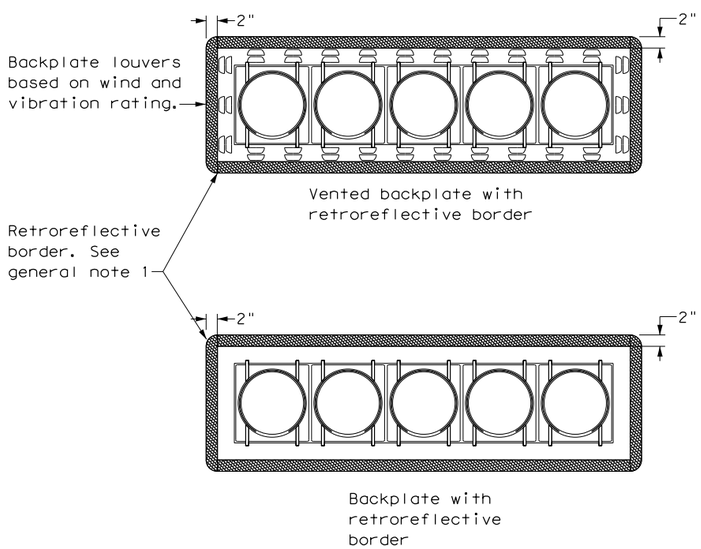

FIVE-SECTION HEAD
HORIZONTAL OR VERTICAL

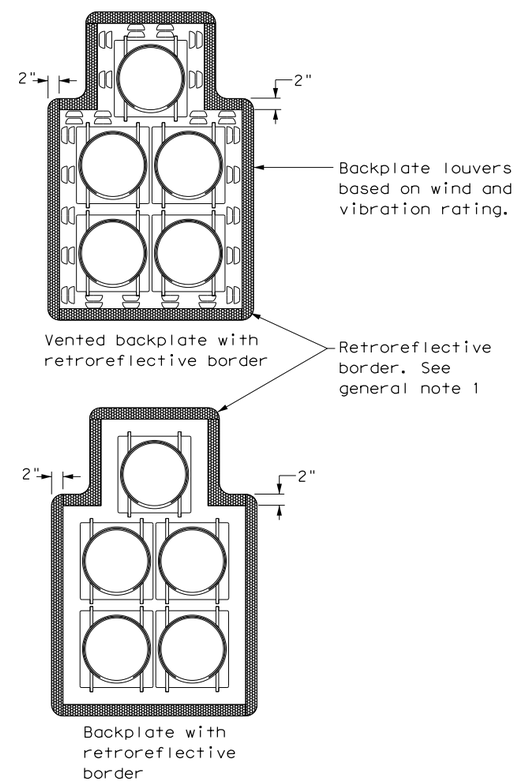

FIVE-SECTION HEAD
CLUSTER

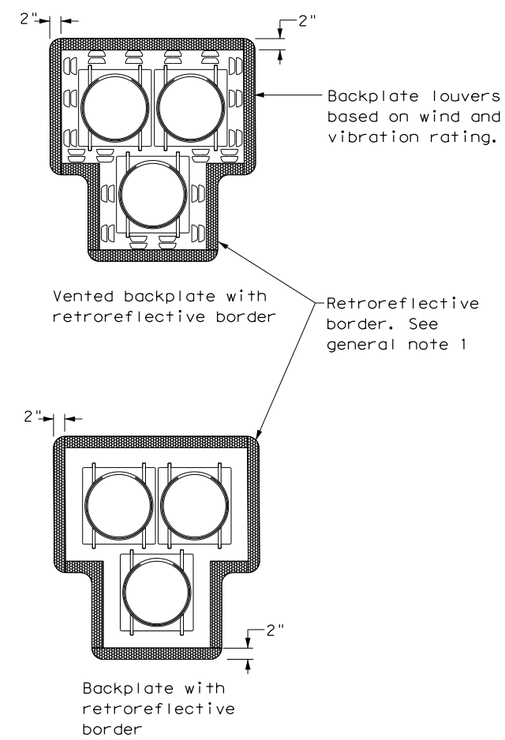

PEDESTRIAN HYBRID
BEACON

GENERAL NOTES:

1. Backplates are optional for traffic signals and pedestrian hybrid beacons. When backplates are used, a 2-inch wide fluorescent yellow AASHTO Type B_{FL} or C_{FL} retroreflective border conforming to TxDOT DMS-8300 is required. Place on all approaches when used.
2. Signal head and backplate compatability must be verified by the contractor prior to installation.
3. When using backplates on signal heads, venting is preferred to reduce cyclic vibration stress.
4. When a vented backplate is used, the retroreflective border must not be placed over the louvers.
5. This standard sheet applies to all signal heads with backplates, including but not limited to:
   - Pole mounted
   - Overhead mounted
   - Span wire mounted
   - Mast arm mounted
   - Vertical signal heads
   - Horizontal signal heads
   - Clustered signal heads
   - Pedestrian hybrid beacons

Texas Department of Transportation — Traffic Safety Division Standard

TRAFFIC SIGNAL HEAD WITH BACKPLATE
TS-BP-20

FILE: ts-bp-20.dgn	DN: TxDOT	CK: TxDOT	DW: TxDOT	CK: TxDOT	
© TxDOT June 2020	CONT	SECT	JOB	HIGHWAY	
REVISIONS	3544	04		SH0211	
	DIST		COUNTY		SHEET NO.
	SAT		BEXAR		17

DATE: 12/6/2022 5:50:04 PM
FILE: P:\89\46\24\Design\Transpo\Standards\ts-bp-20.dgn

MOUNTING LOCATIONS

PRESENCE (RPDD)

① PREFERRED PLACEMENT FOR MAST ARMS, STRAIN POLES AND TIMBER POLES. ON MAST ARM POLES, MOUNT BELOW CONNECTION OF MAST ARM TO A MINIMUM OF 15 FT., MOUNT AS HIGH AS POSSIBLE TO A MAXIMUM OF 30 FT ON STRAIN AND TIMBER POLES.

② PREFERRED PLACEMENT FOR MAST ARMS. MOUNT ON AND BELOW MAST ARM ON NEAR SIDE OF ARM.

③ ALTERNATE PLACEMENT LOCATION. MOUNT AS HIGH AS POSSIBLE TO A MAXIMUM OF 30 FT TO PREVENT OCCLUSION OF THE LEFT TURN LANES. THIS PLACEMENT TO BE USED ONLY IF RPDD CANNOT BE MOUNTED IN THE PREFERRED PLACEMENT LOCATIONS.

ADVANCE (RADD)

Ⓐ PREFERRED PLACEMENT FOR MAST ARMS. ALIGN RADD WITH CENTER OF TRAVEL LANES.

Ⓑ ALTERNATE PLACEMENT FOR MAST ARMS. MOUNT ON BACK SIDE OF OPPOSING MAST ARM.

Ⓒ STRAIN OR TIMBER POLE PLACEMENT. MOUNT ON NEAR SIDE POLE.

Ⓓ ALTERNATE STRAIN OR TIMBER POLE PLACEMENT. MOUNT LUMINAIRE ARM ON NEAR SIDE POLE WITH A MAXIMUM 40 FT MOUNTING HEIGHT.

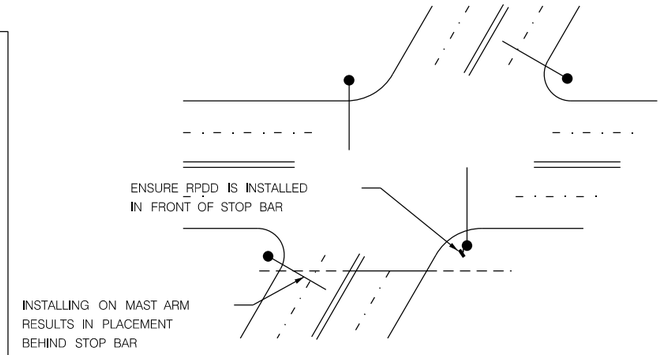

SKEWED INTERSECTION RPDD PLACEMENT

NTS

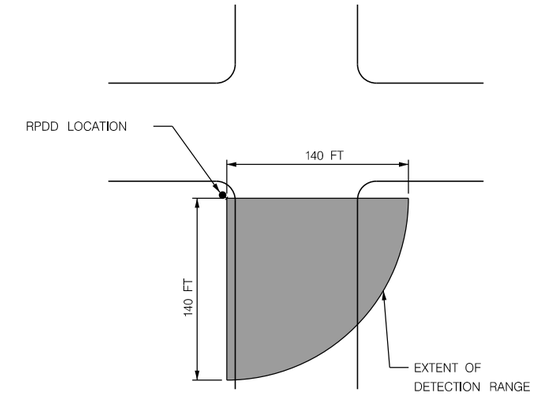

TYPICAL RPDD DETECTION RANGE

NTS

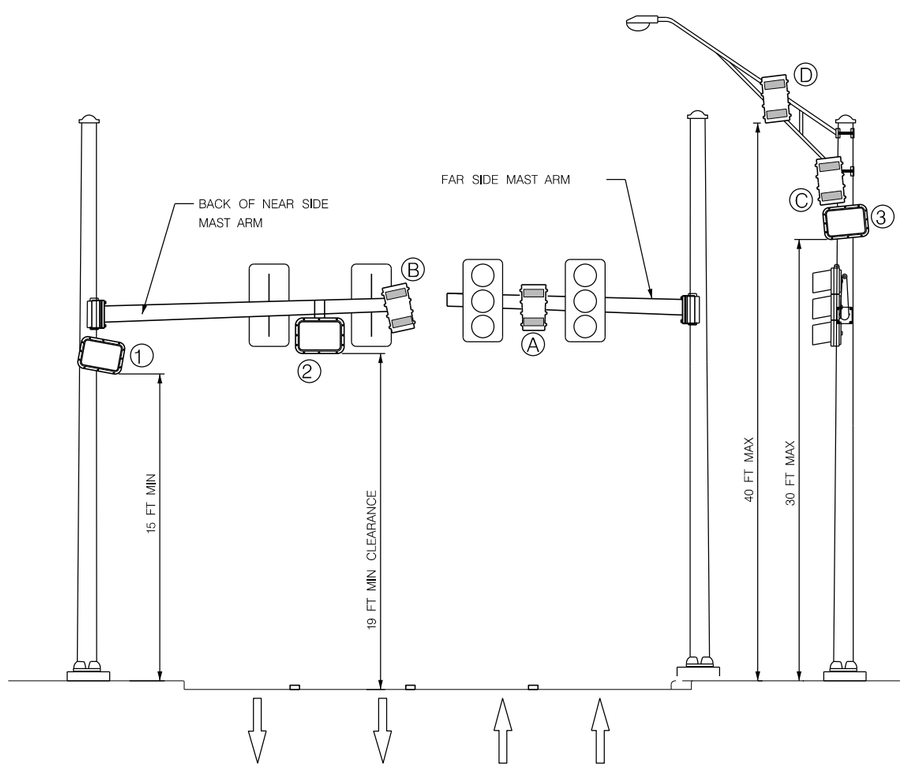

ELEVATION VIEW

NTS

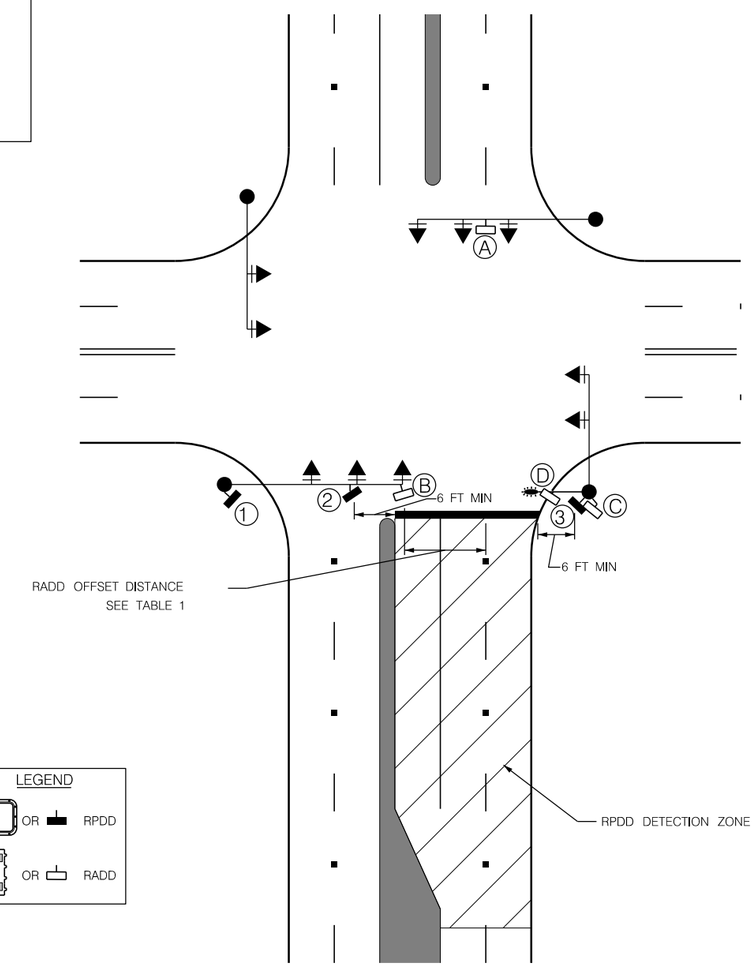

PLAN VIEW

NTS

LEGEND

OR RPDD

OR RADD

NOTES:

1) A MINIMUM 6 FT HORIZONTAL OFFSET MUST BE MAINTAINED BETWEEN THE RPDD AND THE DETECTION ZONE

2) THE RPDD SHALL BE MOUNTED SUCH THAT AT LEAST 20 FT ALONG THE FARTHEST LANE TO BE MONITORED IS WITHIN THE FIELD OF VIEW OF THE RPDD

3) AIM RPDD AT THE CENTER OF THE LANES TO BE MONITORED, APPROXIMATELY 50 FT FROM THE RPDD UNIT

4) MOUNT RPDD SO THAT ITS FIELD OF VIEW IS NOT OCCLUDED BY POLES, SIGNS, OR OTHER STRUCTURES

5) RADD MOUNTING HEIGHT SHALL NOT BE LESS THAN 17 FT OR GREATER THAN 40 FT. RADD MOUNTING LOCATION SHALL HAVE A MAXIMUM 50 FT LATERAL OFFSET FROM CENTER OF TRAVEL LANES TO BE MONITORED

Texas Department of Transportation © 2020

San Antonio District Standard

RADAR PRESENCE DETECTOR (RPDD)
RADAR ADVANCED DETECTION DEVICE (RADD)
PLACEMENT

SCALE: NS — RPDD-RADD-20

REVISIONS	FED. RD. DIV. NO.	PROJECT NO.		SHEET NO.
MAR 2020	6			18
	STATE	DIST.	COUNTY	
	TEXAS	SAT	BEXAR	
	CONT.	SECT.	JOB	HIGHWAY NO.
	3544	04		SH0211

5:50:05 PM
12/6/2022
P:\89\46\24\Design\Transpo\Standards\rpdd_radd-20.dgn

LEVELS DISPLAYED
1 2 3 4 5 6 7 8 9 10 11 12 31 41 51 61
17 18 19 20 21 22 32 42 52 62 72 82 92 303 313 23
33 34 35 36 37 38 39 40 41 42 43 44 45 46 47 48
49 50 51 52 53 54 55 56 57 58 59 60 61 62 63
ACC:

DISCLAIMER:
The use of this standard is governed by the "Texas Engineering Practice Act". No warranty of any kind is made by TxDOT for any purpose whatsoever. TxDOT assumes no responsibility for the conversion of this standard to other formats or for incorrect results or damages resulting from its use.

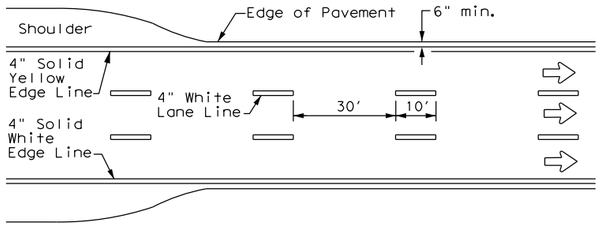

EDGE LINE AND LANE LINES ONE-WAY ROADWAY WITH OR WITHOUT SHOULDERS

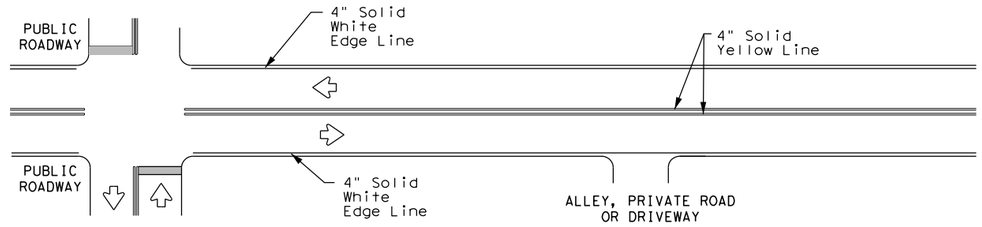

TYPICAL TWO-LANE, TWO-WAY PAVEMENT MARKINGS THROUGH INTERSECTIONS

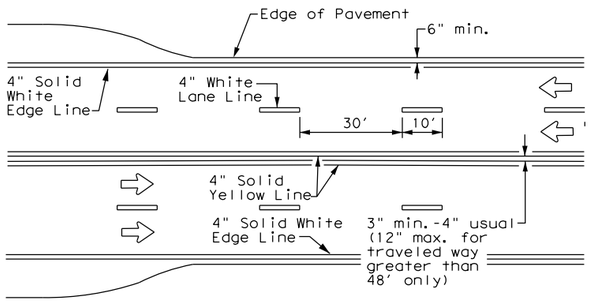

CENTERLINE AND LANE LINES FOUR LANE TWO-WAY ROADWAY WITH OR WITHOUT SHOULDERS

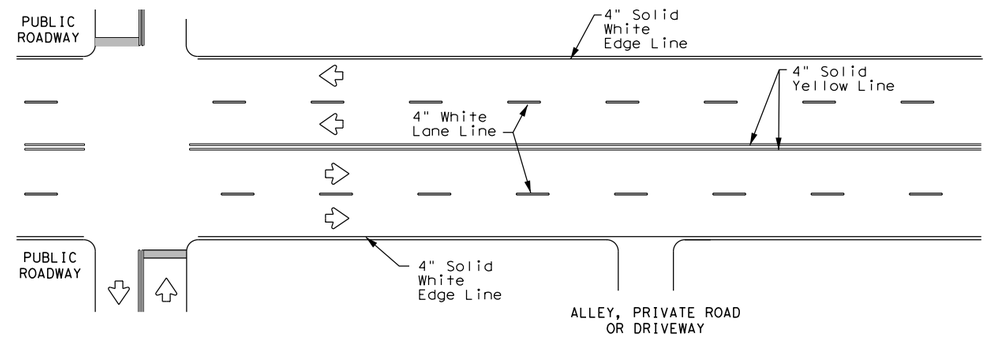

TYPICAL MULTI-LANE, TWO-WAY PAVEMENT MARKINGS THROUGH INTERSECTIONS

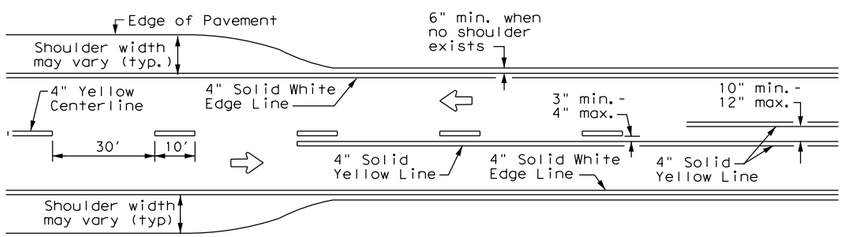

TWO LANE TWO-WAY ROADWAY WITH OR WITHOUT SHOULDERS

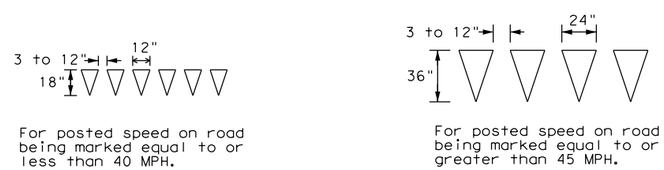

YIELD LINES

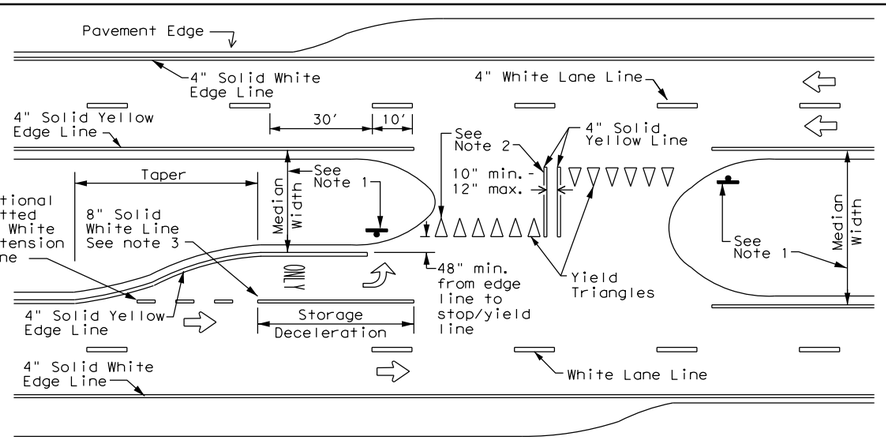

FOUR LANE DIVIDED ROADWAY CROSSOVERS

NOTES

1. Where divided highways are separated by median widths at the median opening itself of 30 feet or more, median openings shall be signed as two separate intersections. Each median opening has two width measurements, with one measurement for each approach. The narrow median width will be the controlling width to determine if signs are required. Yield signs are the typical intersection control. Stop signs are optional as determined by the Engineer.

2. Install median striping (double yellow centerlines and stop bars/yield triangles) when a 50' or greater median centerline can be placed. Stop bars shall only be used with stop signs. Yield traingles shall only be used with yield signs.

3. Length of turn bays, including taper, deceleration, and storage lengths shall be as shown on the plans or as directed by the Engineer.

GENERAL NOTES

1. Edgeline striping shall be as shown in the plans or as directed by the Engineer. The edgeline should not be placed less less than 6 inches from the edge of pavement. This distance may vary due to pavement raveling or other conditions. Edgelines are not required in curb and gutter sections of roadways.

2. The traveled way includes only that portion of the roadway used for vehicular travel. It does not include the parking lanes, sidewalks, berms and shoulders. The traveled ways shall be measured from the inside of edgeline to the inside of edgeline of a two lane roadway.

MATERIAL SPECIFICATIONS	
PAVEMENT MARKERS (REFLECTORIZED)	DMS-4200
EPOXY AND ADHESIVES	DMS-6100
BITUMINOUS ADHESIVE FOR PAVEMENT MARKERS	DMS-6130
TRAFFIC PAINT	DMS-8200
HOT APPLIED THERMOPLASTIC	DMS-8220
PERMANENT PREFABRICATED PAVEMENT MARKINGS	DMS-8240

All pavement marking materials shall meet the required Departmental Material Specifications as specified by the plans.

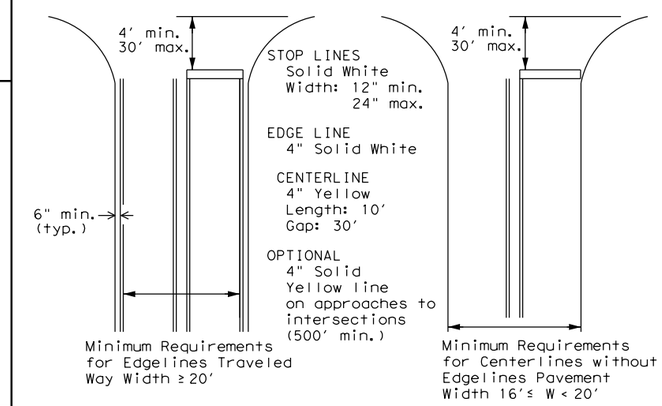

GUIDE FOR PLACEMENT OF STOP LINES, EDGE LINE & CENTERLINE

Based on Traveled Way and Pavement Widths for Undivided Highways

Texas Department of Transportation — Traffic Safety Division Standard

TYPICAL STANDARD PAVEMENT MARKINGS

PM(1)-20

FILE: pmi-20.dgn	DN:	CK:	DW:	CK:
©TxDOT November 1978	CONT	SECT	JOB	HIGHWAY
REVISIONS 8-95 3-03	3544	04		SH0211
5-00 2-12	DIST		COUNTY	SHEET NO.
8-00 6-20	SAT		BEXAR	19

22A

DATE: 12/6/2022 5:50:06 PM
FILE: P:\89\46\24\Design\Transpo\Standards\pmi-20.dgn

REFLECTIVE RAISED PAVEMENT MARKERS FOR VEHICLE POSITIONING GUIDANCE

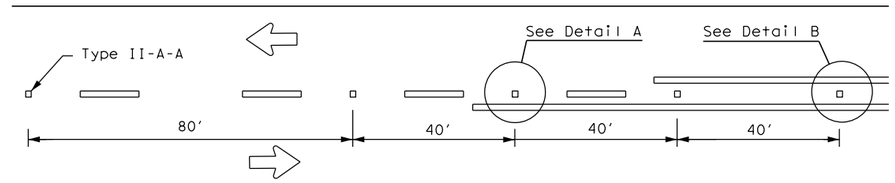

CENTERLINE FOR ALL TWO LANE ROADWAYS

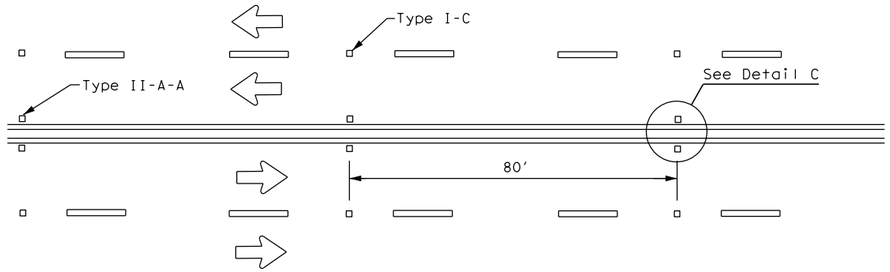

CENTERLINE & LANE LINES FOR FOUR LANE TWO-WAY HIGHWAYS

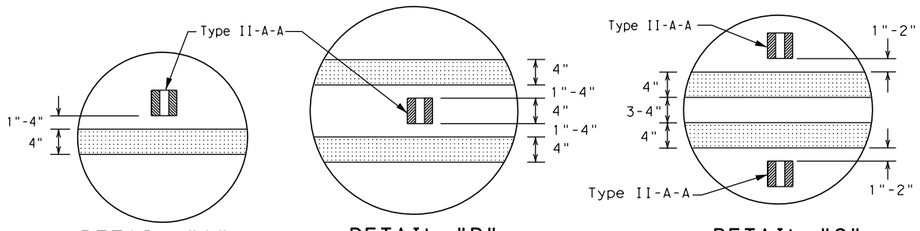

DETAIL "A" DETAIL "B" DETAIL "C"

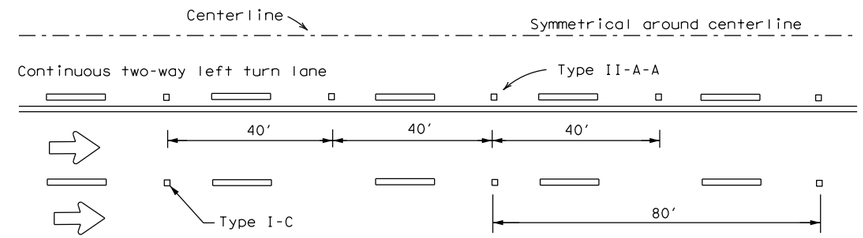

CENTERLINE AND LANE LINES FOR TWO-WAY LEFT TURN LANE

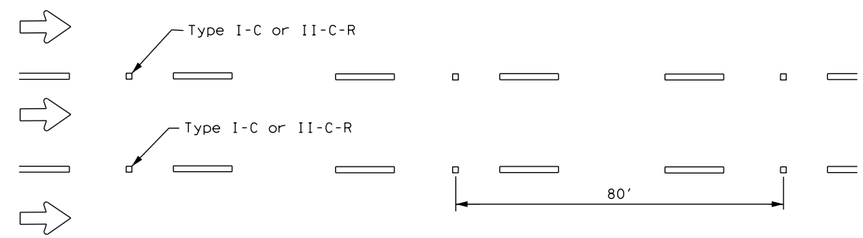

LANE LINES FOR ONE-WAY ROADWAY (NON-FREEWAY FACILITIES)

Raised pavement markers Type II-C-R shall have clear face toward normal traffic and red face toward wrong-way traffic.

MATERIAL SPECIFICATIONS	
PAVEMENT MARKERS (REFLECTORIZED)	DMS-4200
EPOXY AND ADHESIVES	DMS-6100
BITUMINOUS ADHESIVE FOR PAVEMENT MARKERS	DMS-6130
TRAFFIC PAINT	DMS-8200
HOT APPLIED THERMOPLASTIC	DMS-8220
PERMANENT PREFABRICATED PAVEMENT MARKINGS	DMS-8240

All pavement marking materials shall meet the required Departmental Material Specifications as specified by the plans.

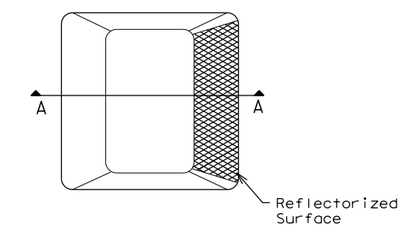

Type I (Top View)

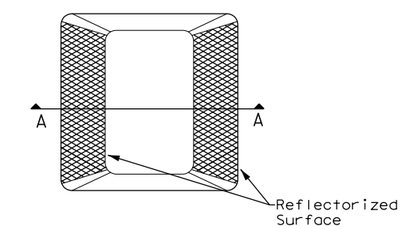

Type II (Top View)

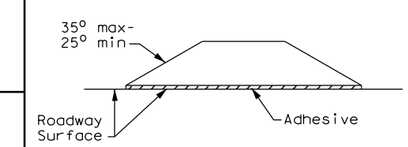

SECTION A

RAISED PAVEMENT MARKERS

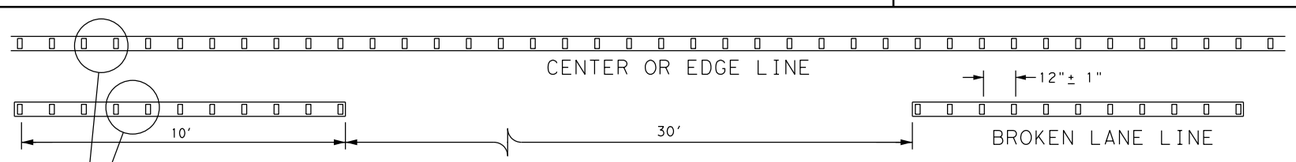

REFLECTORIZED PROFILE PATTERN DETAIL

USING REFLECTIVE PROFILE PAVEMENT MARKINGS

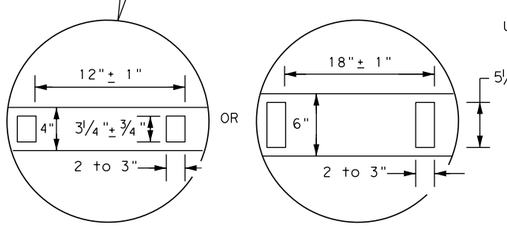

4" EDGE LINE, CENTER LINE OR LANE LINE

OPTIONAL 6" EDGE LINE, CENTER LINE OR LANE LINE

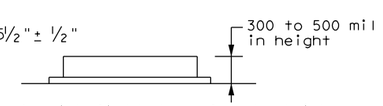

A quick field check for the thickness of base line and profile marking is approximately equal to a stack of 5 quarters to a maximum height of 7 quarters.

NOTE

Profile markings shall not be placed on roadways with a posted speed limit of 45 MPH or less.

GENERAL NOTES

1. All raised pavement markers placed in broken lines shall be placed in line with and midway between the stripes.
2. On concrete pavements the raised pavement markers should be placed to one side of the longitudinal joints.

Texas Department of Transportation — Traffic Safety Division Standard

POSITION GUIDANCE USING RAISED MARKERS RELECTORIZED PROFILE MARKINGS PM(2)-20

FILE: pm2-20.dgn	DN:	CK:	DW:	CK:
©TxDOT April 1977	CONT	SECT	JOB	HIGHWAY
REVISIONS 4-92 2-10, 5-00 2-12, 8-00 6-20	3544	04		SH0211
	DIST	COUNTY		SHEET NO.
	SAT	BEXAR		20

22B

DISCLAIMER: The use of this standard is governed by the "Texas Engineering Practice Act". No warranty of any kind is made by TxDOT for any purpose whatsoever. TxDOT assumes no responsibility for the conversion of this standard to other formats or for incorrect results or damages resulting from its use.

DATE: 12/6/2022 5:50:07 PM
FILE: P:\89\46\24\Design\Transpo\Standards\pm2-20.dgn

DISCLAIMER:
The use of this standard is governed by the "Texas Engineering Practice Act". No warranty of any kind is made by TxDOT for any purpose whatsoever. TxDOT assumes no responsibility for the conversion of this standard to other formats or for incorrect results or damages resulting from its use.

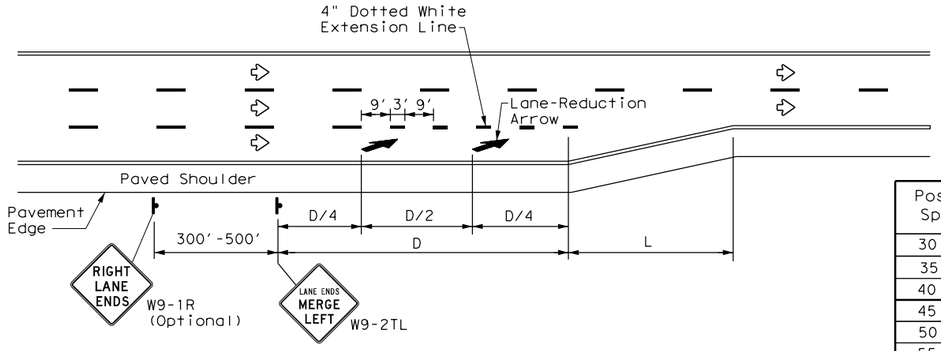

LANE REDUCTION

Posted Speed	D (ft)	L (ft)
30 MPH	460	$L=\frac{WS^2}{60}$
35 MPH	565	
40 MPH	670	
45 MPH	775	L=WS
50 MPH	885	
55 MPH	990	
60 MPH	1,100	
65 MPH	1,200	
70 MPH	1,250	
75 MPH	1,350	

NOTES

1. Lane reduction pavement markings are used where the number of through lanes is reduced because of narrowing of the roadway or because of a section of on-street parking in what would otherwise be a through lane. For Texas Super 2 Passing Lanes, see TS2(PL) standard sheets.
2. On divided highways, an additional W9-1R "RIGHT LANE ENDS" sign may be installed in the median aligned with the W9-1R sign on the right side of the highway.
3. Lane reduction arrows are required for speeds of 45 mph or greater. An optional third lane reduction arrow may be added based on engineering judgement. If used, the optional third lane reduction arrow should be centered between the first and last lane reduction arrows.
4. For lane reductions on Freeways and Expressways, signing shall conform to the TxDOT Freeway Signing Handbook.

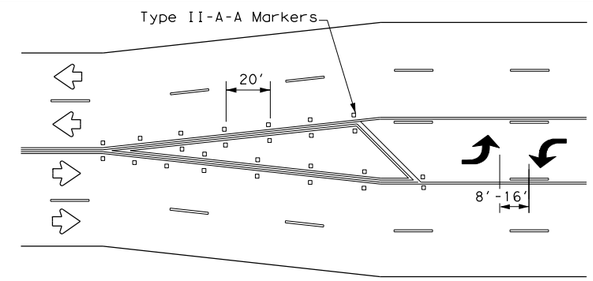

A two-way left-turn (TWLT) lane-use arrow pavement marking should be used at or just downstream from the beginning of a two-way left-turn lane within a corridor. Repeating the marking after each intersection or dedicated turn bay is not required unless stated elsewhere in the plans.

TYPICAL TRANSITION FOR TWLTL AND DIVIDED HIGHWAY

GENERAL NOTES

1. Lane use word and arrow markings shall be used where through lanes approaching an intersection become mandatory turn lanes. Lane use word and arrow markings should be used in auxiliary lanes of substantial length. Lane use arrow markings or word and arrow markings may be used in other lanes and turn bays for emphasis. Details for words and arrows are as shown in the Standard Highway Sign Designs for Texas.
2. When lane-use words and arrow markings are used, two sets of arrows should be used if the length of the bay is greater than 180 feet. When a single lane use arrow or word and arrow marking is used for a short turn lane, it should be located at or near the upstream end of the full-width turn lane.
3. Use raised pavement marker Type I-C with undivided highways, flush medians and two way left turn lanes. Use raised pavement marker Type II-C-R with divided highways and raised medians.
4. Length of turn bays, including taper, deceleration, and storage lengths shall be as shown on the plans or as directed by the Engineer.

MATERIAL SPECIFICATIONS	
PAVEMENT MARKERS (REFLECTORIZED)	DMS-4200
EPOXY AND ADHESIVES	DMS-6100
BITUMINOUS ADHESIVE FOR PAVEMENT MARKERS	DMS-6130
TRAFFIC PAINT	DMS-8200
HOT APPLIED THERMOPLASTIC	DMS-8220
PERMANENT PREFABRICATED PAVEMENT MARKINGS	DMS-8240

All pavement marking materials shall meet the required Departmental Material Specifications as specified by the plans.

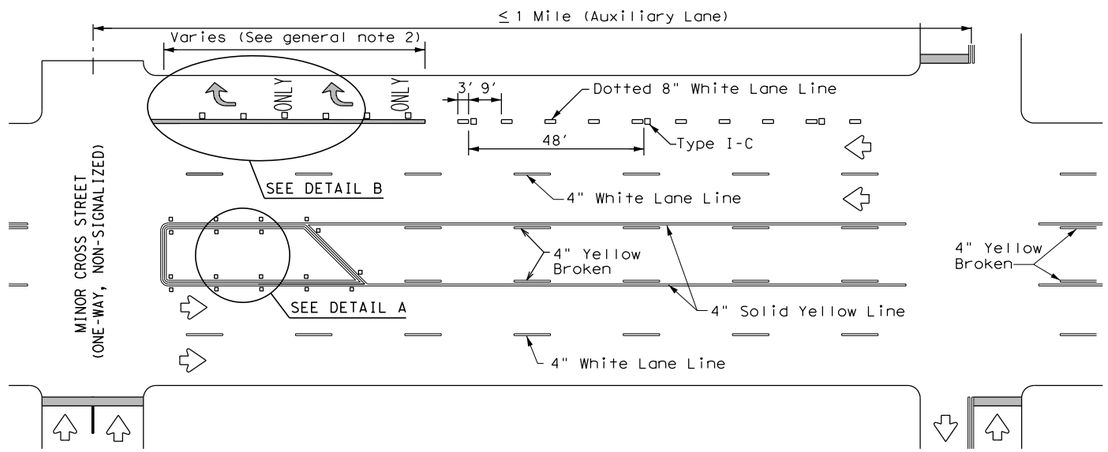

TYPICAL TWLTL AT ONE-WAY STREET AND RIGHT TURN AUXILIARY LANE

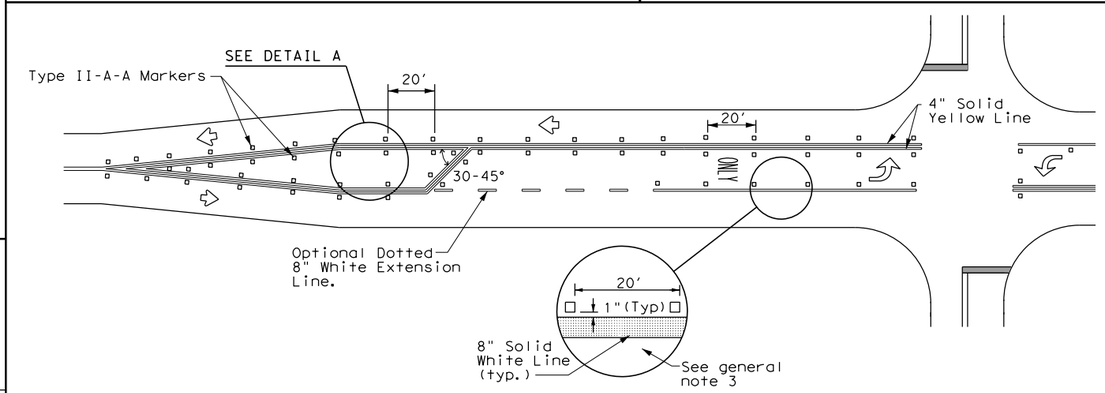

TYPICAL TWO-LANE HIGHWAY INTERSECTION WITH LEFT TURN BAYS

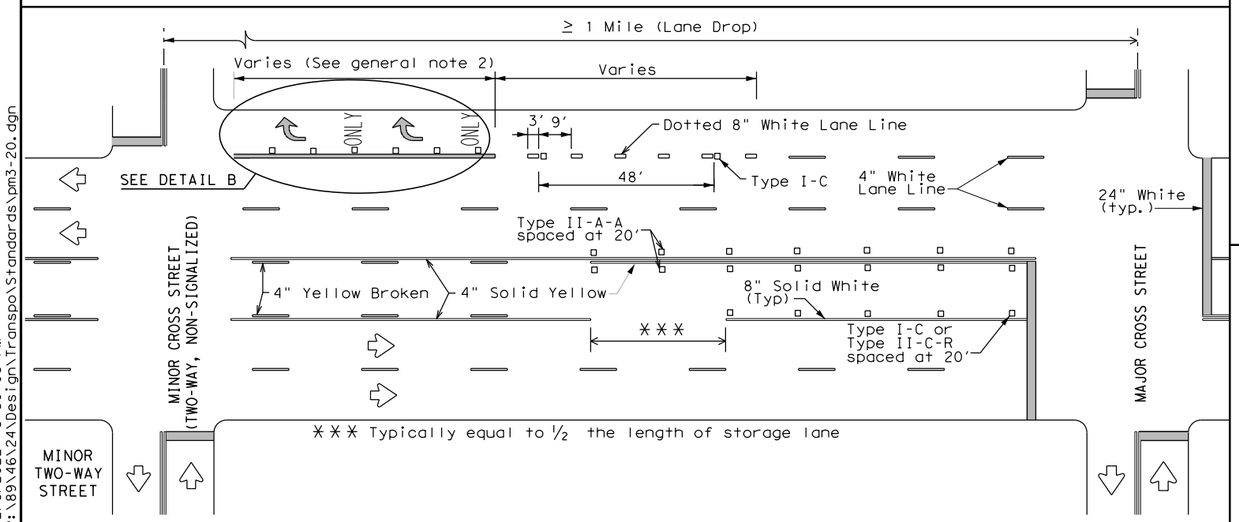

✱✱✱ Typically equal to ½ the length of storage lane

TYPICAL TWLTL AT TWO-WAY CROSS STREET AND RIGHT TURN LANE DROP

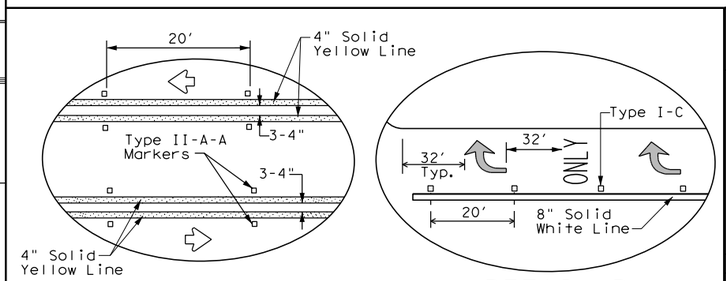

DETAIL A

DETAIL B

Texas Department of Transportation

Traffic Safety Division Standard

TWO-WAY LEFT TURN LANES, RURAL LEFT TURN BAYS, AND LANE REDUCTION PAVEMENT MARKINGS

PM(3)-20

FILE: pm3-20.dgn	DN:	CK:	DW:	CK:
©TxDOT April 1998	CONT	SECT	JOB	HIGHWAY
REVISIONS	3544	04		SH0211
5-00 2-10	DIST		COUNTY	SHEET NO.
8-00 2-12				
3-03 6-20	SAT		BEXAR	21

22C

DATE: 12/6/2022 5:50:08 PM
FILE: P:\89\46\24\Design\Transpo\Standards\pm3-20.dgn

DISCLAIMER:
The use of this standard is governed by the "Texas Engineering Practice Act". No warranty of any kind is made by TxDOT for any purpose whatsoever. TxDOT assumes no responsibility for the conversion of this standard to other formats or for incorrect results or damages resulting from its use.

DATE: 12/6/2022 5:50:09 PM
FILE: P:\89\46\24\Design\Transpo\Standards\tsr3-13.dgn

REQUIREMENTS FOR INDEPENDENT MOUNTED ROUTE SIGNS

SHEETING REQUIREMENTS		
USAGE	COLOR	SIGN FACE MATERIAL
BACKGROUND	WHITE	TYPE A SHEETING
BACKGROUND	ALL OTHERS	TYPE B OR C SHEETING
LEGEND & BORDERS	WHITE	TYPE A SHEETING
LEGEND & BORDERS	BLACK	ACRYLIC NON-REFLECTIVE FILM
LEGEND & BORDERS	ALL OTHERS	TYPE B or C SHEETING

TYPICAL EXAMPLES

REQUIREMENTS FOR BLUE, BROWN & GREEN D AND I SERIES GUIDE SIGNS

SHEETING REQUIREMENTS		
USAGE	COLOR	SIGN FACE MATERIAL
BACKGROUND	ALL	TYPE B OR C SHEETING
LEGEND & BORDERS	WHITE	TYPE D SHEETING
LEGEND, SYMBOLS & BORDERS	ALL OTHERS	TYPE B OR C SHEETING

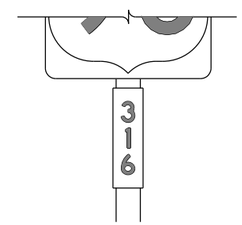

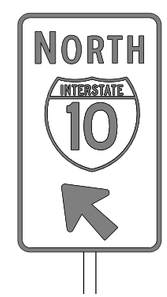

TYPICAL EXAMPLES

GENERAL NOTES

1. Signs to be furnished shall be as detailed elsewhere in the plans and/or as shown on sign tabulation sheet. Standard sign designs and arrow dimensions can be found in the "Standard Highway Sign Designs for Texas" (SHSD).
2. White legend shall use the Clearview Alphabet. The following Clearview fonts shall be used to replace the existing white Federal Highway Administration (FHWA) Standard Highway Alphabets, when not specified in the SHSD, or in the plans.

B	CV-1W
C	CV-2W
D	CV-3W
E	CV-4W
Emod	CV-5WR
F	CV-6W

3. Route sign legend (ie. IH, US, SH and FM shields) shall use the Federal Highway Administration (FHWA) Standard Highway Alphabets B, C, D, E, Emod or F).
4. Lateral spacing between letters and numerals shall conform with the SHSD, and any approved changes thereto. Lateral spacing of legend shall provide a balanced appearance when spacing is not shown.
5. Independent mounted route sign with white or colored legend and borders shall be applied by screening process with transparent color ink, transparent colored overlay film to white background sheeting or cut-out white sheeting to colored background sheeting, or combination thereof. White legend, symbols and borders on all other signs shall be cut-out white sheeting applied to colored background sheeting.
6. Information regarding borders and radii for signs is found in the "Standard Highway Sign Designs for Texas". Dimensions shown and described for borders and corner radii on parent sign are nominal. Borders may vary in width as much as 1/2 inch. Corner radii above 3 inches may vary in width as much as 1 inch. Borders and corner radii within a parent sign must be of matching widths. The sign area outside the corner radius should be trimmed or rounded.
7. Sign substrate shall be any material that meets the Departmental Material Specification requirements of DMS-7110 or approved alternative.
8. Mounting details of roadside signs are shown in the "SMD series" Standard Plan Sheets.

DEPARTMENTAL MATERIAL SPECIFICATIONS	
ALUMINUM SIGN BLANKS	DMS-7110
SIGN FACE MATERIALS	DMS-8300

ALUMINUM SIGN BLANKS THICKNESS	
Square Feet	Minimum Thickness
Less than 7.5	0.080
7.5 to 15	0.100
Greater than 15	0.125

The Standard Highway Sign Designs for Texas (SHSD) can be found at the following website.

http://www.txdot.gov/

Texas Department of Transportation

Traffic Operations Division Standard

TYPICAL SIGN REQUIREMENTS

TSR(3)-13

FILE: tsr3-13.dgn	DN: TxDOT	CK: TxDOT	DW: TxDOT	CK: TxDOT
©TxDOT October 2003	CONT	SECT	JOB	HIGHWAY
REVISIONS	3544	04		SH0211
12-03 7-13	DIST		COUNTY	SHEET NO.
9-08	SAT		BEXAR	22

3

DISCLAIMER:
The use of this standard is governed by the "Texas Engineering Practice Act". No warranty of any kind is made by TxDOT for any purpose whatsoever. TxDOT assumes no responsibility for the conversion of this standard to other formats or for incorrect results or damages resulting from its use.

DATE: 12/6/2022 5:50:10 PM
FILE: P:\89\46\24\Design\Transpo\Standards\tsr4-13.dgn

REQUIREMENTS FOR RED BACKGROUND REGULATORY SIGNS

(STOP, YIELD, DO NOT ENTER AND WRONG WAY SIGNS)

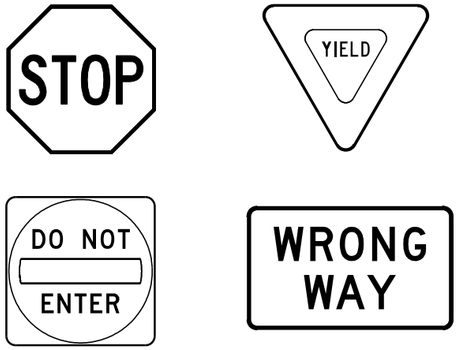

REQUIREMENTS FOR FOUR SPECIFIC SIGNS ONLY

SHEETING REQUIREMENTS		
USAGE	COLOR	SIGN FACE MATERIAL
BACKGROUND	RED	TYPE B OR C SHEETING
BACKGROUND	WHITE	TYPE B OR C SHEETING
LEGEND & BORDERS	WHITE	TYPE B OR C SHEETING
LEGEND	RED	TYPE B OR C SHEETING

REQUIREMENTS FOR WHITE BACKGROUND REGULATORY SIGNS

(EXCLUDING STOP, YIELD, DO NOT ENTER AND WRONG WAY SIGNS)

TYPICAL EXAMPLES

SHEETING REQUIREMENTS		
USAGE	COLOR	SIGN FACE MATERIAL
BACKGROUND	WHITE	TYPE A SHEETING
BACKGROUND	ALL OTHERS	TYPE B OR C SHEETING
LEGEND, BORDERS AND SYMBOLS	BLACK	ACRYLIC NON-REFLECTIVE FILM
LEGEND, BORDERS AND SYMBOLS	ALL OTHER	TYPE B OR C SHEETING

REQUIREMENTS FOR WARNING SIGNS

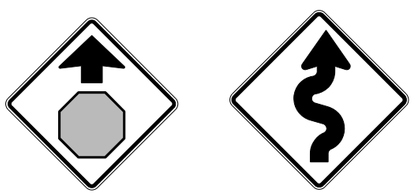

TYPICAL EXAMPLES

SHEETING REQUIREMENTS		
USAGE	COLOR	SIGN FACE MATERIAL
BACKGROUND	FLOURESCENT YELLOW	TYPE B_{FL} OR C_{FL} SHEETING
LEGEND & BORDERS	BLACK	ACRYLIC NON-REFLECTIVE FILM
LEGEND & SYMBOLS	ALL OTHER	TYPE B OR C SHEETING

REQUIREMENTS FOR SCHOOL SIGNS

TYPICAL EXAMPLES

SHEETING REQUIREMENTS		
USAGE	COLOR	SIGN FACE MATERIAL
BACKGROUND	WHITE	TYPE A SHEETING
BACKGROUND	FLOURESCENT YELLOW GREEN	TYPE B_{FL} OR C_{FL} SHEETING
LEGEND, BORDERS AND SYMBOLS	BLACK	ACRYLIC NON-REFLECTIVE FILM
SYMBOLS	RED	TYPE B OR C SHEETING

GENERAL NOTES

1. Signs to be furnished shall be as detailed elsewhere in the plans and/or as shown on sign tabulation sheet. Standard sign designs and arrow dimensions can be found in the "Standard Highway Sign Designs for Texas" (SHSD).
2. Sign legend shall use the Federal Highway Administration (FHWA) Standard Highway Alphabets (B, C, D, E, Emod or F).
3. Lateral spacing between letters and numerals shall conform with the SHSD, and any approved changes thereto. Lateral spacing of legend shall provide a balanced appearance when spacing is not shown.
4. Black legend and borders shall be applied by screening process or cut-out acrylic non-reflective black film to background sheeting, or combination thereof.
5. White legend and borders shall be applied by screening process with transparent colored ink, transparent colored overlay film to white background sheeting or cut-out white sheeting to colored background sheeting, or combination thereof.
6. Colored legend shall be applied by screening process with transparent colored ink, transparent colored overlay film or colored sheeting to background sheeting, or combination thereof.
7. Sign substrate shall be any material that meets the Departmental Material Specification requirements of DMS-7110 or approved alternative.
8. Mounting details for roadside mounted signs are shown in the "SMD series" Standard Plan Sheets.

ALUMINUM SIGN BLANKS THICKNESS	
Square Feet	Minimum Thickness
Less than 7.5	0.080
7.5 to 15	0.100
Greater than 15	0.125

DEPARTMENTAL MATERIAL SPECIFICATIONS	
ALUMINUM SIGN BLANKS	DMS-7110
SIGN FACE MATERIALS	DMS-8300

The Standard Highway Sign Designs for Texas (SHSD) can be found at the following website.

http://www.txdot.gov/

Texas Department of Transportation

Traffic Operations Division Standard

TYPICAL SIGN REQUIREMENTS

TSR(4)-13

FILE: tsr4-13.dgn	DN: TxDOT	CK: TxDOT	DW: TxDOT	CK: TxDOT
© TxDOT October 2003	CONT	SECT	JOB	HIGHWAY
REVISIONS 12-03 7-13 9-08	3544	04		SH0211
	DIST		COUNTY	SHEET NO.
	SAT		BEXAR	23

4

DISCLAIMER: The use of this standard is governed by the "Texas Engineering Practice Act". No warranty of any kind is made by TxDOT for any purpose whatsoever. TxDOT assumes no responsibility for the conversion of this standard to other formats or for incorrect results or damages resulting from its use.

SIGN SUPPORT DESCRIPTIVE CODES

(Descriptive Codes correspond to project estimate and quantities sheets)

SM RD SGN ASSM TY XXXXX(X)XX(X-XXXX)

Post Type

- FRP = Fiberglass Reinforced Plastic Pipe (see SMD(FRP))
- TWT = Thin-Walled Tubing (see SMD(TWT))
- 10BWG = 10 BWG Tubing (see SMD(SLIP-1) to (SLIP-3))
- S80 = Schedule 80 Pipe (see SMD(SLIP-1) to (SLIP-3))

Number of Posts (1 or 2)

Anchor Type

- UA = Universal Anchor - Concreted (see SMD(FRP) and (TWT))
- UB = Universal Anchor - Bolted down (see SMD(FRP) and (TWT))
- WS = Wedge Anchor Steel - (see SMD(TWT))
- WP = Wedge Anchor Plastic (see SMD(TWT))
- SA = Slipbase - Concreted (see SMD(SLIP-1) to (SLIP-3))
- SB = Slipbase - Bolted Down (see SMD(SLIP-1) to (SLIP-3))

Sign Mounting Designation

- P = Prefab. "Plain" (see SMD(SLIP-1) to (SLIP-3), (TWT), (FRP))
- T = Prefab. "T" (see SMD(SLIP-1) to (SLIP-3), (TWT))
- U = Prefab. "U" (see SMD(SLIP-1) to (SLIP-3))
- IF REQUIRED
- 1EXT or 2EXT = Number of Extensions (see SMD(SLIP-1) to (SLIP-3), (TWT))
- BM = Extruded Wind Beam (see SMD(SLIP-1) to (SLIP-3))
- WC = 1.12 #/ft Wing Channel (see SMD(SLIP-1) to (SLIP-3))
- EXAL = Extruded Aluminum Sign Panels (see SMD(SLIP-3))

REQUIRED CLEARANCE FOR BREAKAWAY SUPPORT

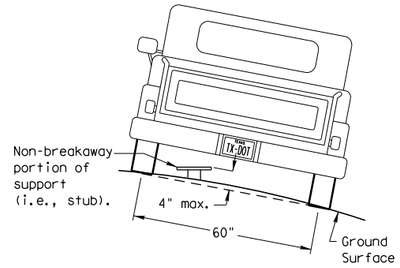

To avoid vehicle undercarriage snagging, any substantial remains of a breakaway support, when it is broken away, should not project more than 4 inches above a 60-inch chord (i.e., typical space between wheel paths).

SIGN LOCATION

PAVED SHOULDERS

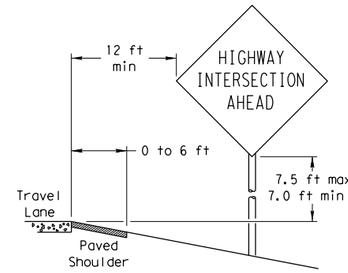

LESS THAN 6 FT. WIDE

When the shoulder is 6 ft. or less in width, the sign must be placed at least 12 ft. from the edge of the travel lane.

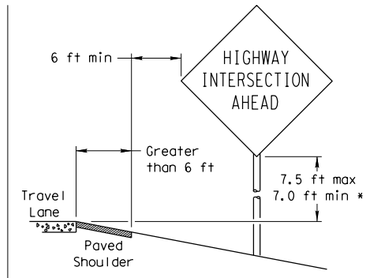

GREATER THAN 6 FT. WIDE

When the shoulder is greater than 6 ft in width, the sign must be placed at least 6 ft. from the edge of the shoulder.

T-INTERSECTION

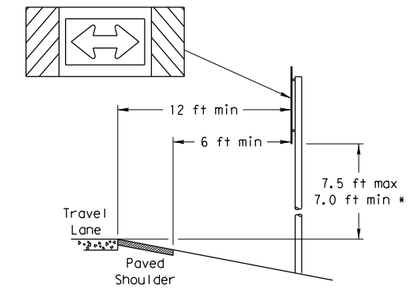

When this sign is needed at the end of a two-lane, two way roadway, the right edge of the sign should be in line with the centerline of the roadway. Place as close to ROW as practical.

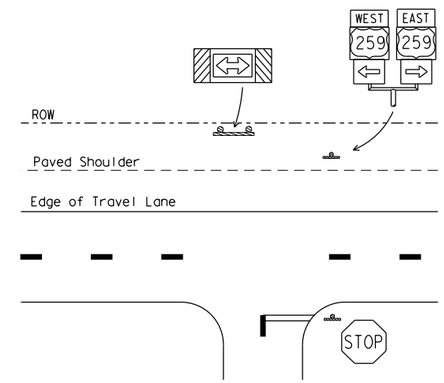

BEHIND BARRIER

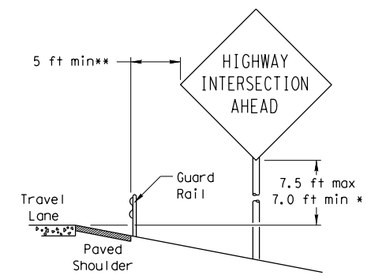

BEHIND GUARDRAIL

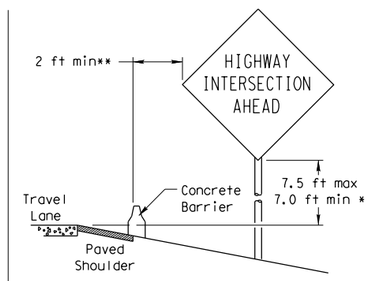

BEHIND CONCRETE BARRIER

**Sign clearance based on distance required for proper guard rail or concrete barrier performance.

* Signs shall be mounted using the following condition that results in the greatest sign elevation:

(1) a minimum of 7 to a maximum of 7.5 feet above the edge of the travel lane or

(2) a minimum of 7 to a maximum of 7.5 feet above the grade at the base of the support when sign is installed on the backslope.

The maximum values may be increased when directed by the Engineer.

See the Traffic Operations Division website for detailed drawings of sign clamps, Triangular Slipbase System components and Wedge Anchor System components.

The website address is:
http://www.txdot.gov/publications/traffic.htm

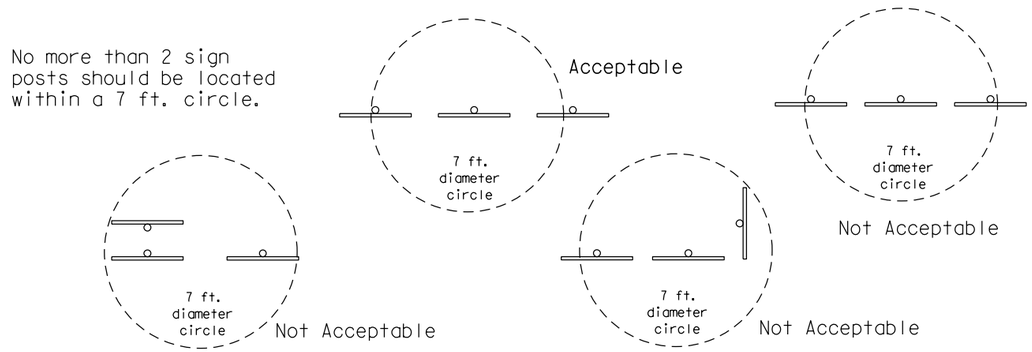

TYPICAL SIGN ATTACHMENT DETAIL

Single Signs

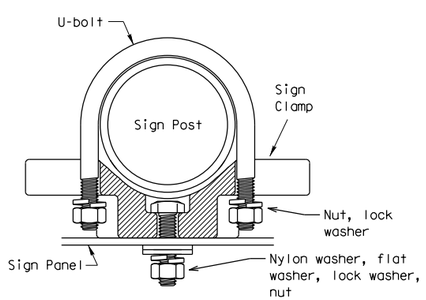

Bolts used to mount sign panels to the clamp are 5/16-18 UNC galvanized square head with nut, nylon washer, flat washer and lock washer. The bolt length is 1 inch for aluminum.

When two sign clamps are used to mount signs back-to-back, use a 5/16-18 UNC galvanized hex head per ASTM A307 with nut and helical-spring lock washer. The approximate bolt lengths for various post sizes and sign clamp types are given in the table at right. The bolt length may need to be adjusted depending upon field conditions.

Sign clamps may be either the specific size clamp or the universal clamp.

Back-to-Back Signs

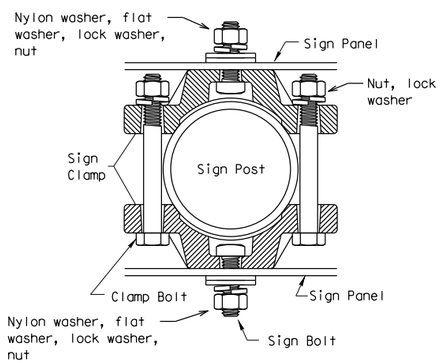

Pipe Diameter	Approximate Bolt Length	
	Specific Clamp	Universal Clamp
2" nominal	3"	3 or 3 1/2"
2 1/2" nominal	3 or 3 1/2"	3 1/2 or 4"
3" nominal	3 1/2 or 4"	4 1/2"

SIGNS WITH PLAQUES

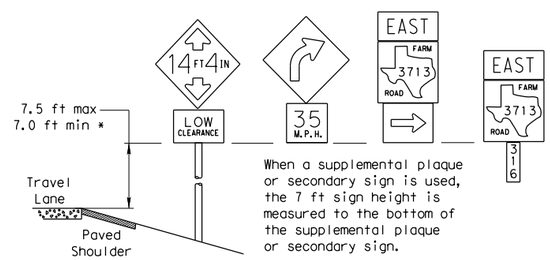

When a supplemental plaque or secondary sign is used, the 7 ft sign height is measured to the bottom of the supplemental plaque or secondary sign.

CURB & GUTTER OR RAISED ISLAND

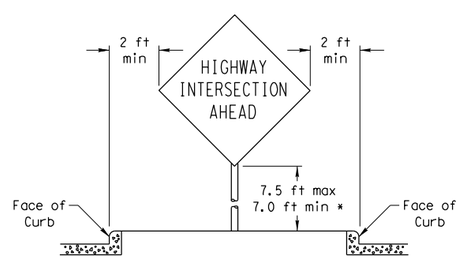

RESTRICTED RIGHT-OF-WAY

(When 6 ft min. is not possible.)

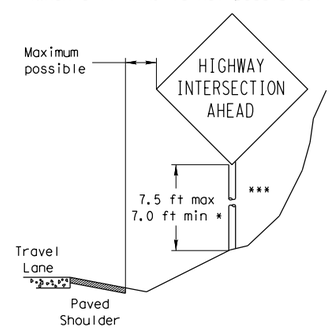

Right-of-way restrictions may be created by rocks, water, vegetation, forest, buildings, a narrow island, or other factors.

In situations where a lateral restriction prevents the minimum horizontal clearance from the edge of the travel lane, signs should be placed as far from the travel lane as practical.

*** Post may be shorter if protected by guardrail or if Engineer determines the post could not be hit due to extreme slope.

Texas Department of Transportation
Traffic Operations Division

SIGN MOUNTING DETAILS SMALL ROADSIDE SIGNS GENERAL NOTES & DETAILS

SMD(GEN)-08

©TxDOT July 2002

9-08 REVISIONS	DN: TXDOT	CK: TXDOT	DW: TXDOT	CK: TXDOT
	CONT	SECT	JOB	HIGHWAY
	3544	04		SH0211
	DIST		COUNTY	SHEET NO.
	SAT		BEXAR	24

DATE: 12/6/2022 5:50:11 PM
FILE: P:\89\46\24\Design\Transpo\Standards\smdgen.dgn

TRIANGULAR SLIPBASE INSTALLATION GENERAL REQUIREMENTS

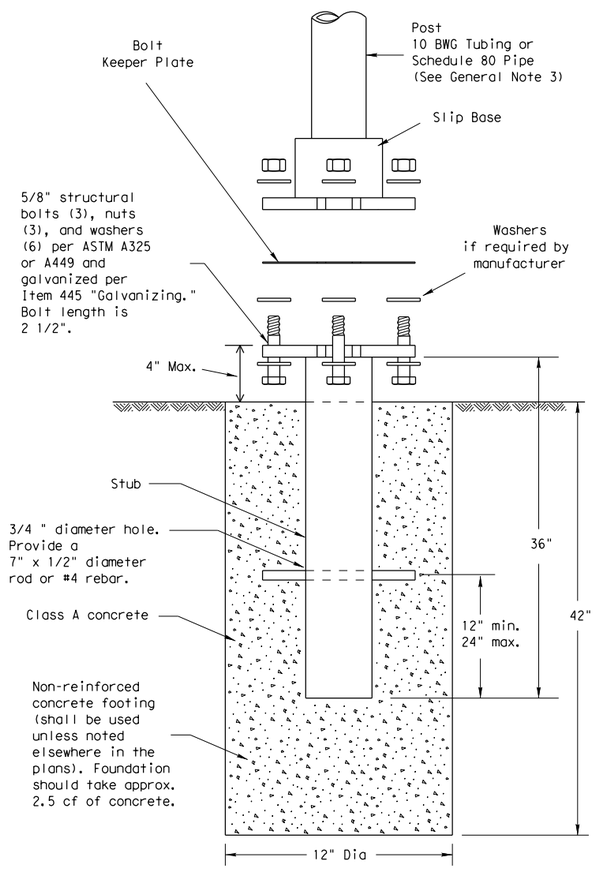

SM RD SGN ASSM TY XXXXX(X)SA(X-XXXX)

NOTE

There are various devices approved for the Triangular Slipbase System. Please reference the Material Producer List for approved slip base systems. http://www.txdot.gov/business/producer_list.htm The devices shall be installed per manufacturers' recommendations. Installation procedures shall be provided to the Engineer by Contractor.

GENERAL NOTES:

1. Slip base shall be permanently marked to indicate manufacturer. Method, design, and location of marking are subject to approval of the TxDOT Traffic Standards Engineer.
2. Material used as post with this system shall conform to the following specifications:
   10 BWG Tubing (2.875" outside diameter)
   - 0.134" nominal wall thickness
   - Seamless or electric-resistance welded steel tubing or pipe
   - Steel shall be HSLAS Gr 55 per ASTM A1011 or ASTM A1008
   - Other steels may be used if they meet the following:
     - 55,000 PSI minimum yield strength
     - 70,000 PSI minimum tensile strength
     - 20% minimum elongation in 2"
   - Wall thickness (uncoated) shall be within the range of 0.122" to 0.138"
   - Outside diameter (uncoated) shall be within the range of 2.867" to 2.883"
   - Galvanization per ASTM A123 or ASTM A653 G210. For precoated steel tubing (ASTM A653), recoat tube outside diameter weld seam by metallizing with zinc wire per ASTM B833.

   Schedule 80 Pipe (2.875" outside diameter)
   - 0.276" nominal wall thickness
   - Steel tubing per ASTM A500 Gr C
   - Other seamless or electric-resistance welded steel tubing or pipe with equivalent outside diameter and wall thickness may be used if they meet the following:
     - 46,000 PSI minimum yield strength
     - 62,000 PSI minimum tensile strength
     - 21% minimum elongation in 2"
   - Wall thickness (uncoated) shall be within the range of 0.248" to 0.304"
   - Outside diameter (uncoated) shall be within the range of 2.855" to 2.895"
   - Galvanization per ASTM A123
3. See the Traffic Operations Division website for detailed drawings of sign clamps and Texas Universal Triangular Slipbase System components. The website address is:
   http://www.txdot.gov/publications/traffic.htm
4. Sign supports shall not be spliced except where shown. Sign support posts shall not be spliced.

ASSEMBLY PROCEDURE

Foundation

1. Prepare 12-inch diameter by 42-inch deep hole. If solid rock is encountered, the depth of the foundation may be reduced such that it is embedded a minimum of 18 inches into the solid rock.
2. The Engineer may permit batches of concrete less than 2 cubic yards to be mixed with a portable, motor-driven concrete mixer. For small placements less than 0.5 cubic yards, hand mixing in a suitable container may be allowed by Engineer. Concrete shall be Class A.
3. Push the pipe end of the slip base stub into the center of the concrete. Rotate the stub back and forth while pushing it down into the concrete to assure good contact between the concrete and stub. Continue to work the stub into the concrete until it is between 2 to 4 inches above the ground.
4. Plumb the stub. Allow a minimum of 4 days to set, unless otherwise directed by the Engineer.
5. The triangular slipbase system is multidirectional and is designed to release when struck from any direction.

Support

1. Cut support so that the bottom of the sign will be 7 to 7.5 feet above the edge of the travelway (i.e., edge of the closest lane) when slip plate is below the edge of pavement or 7 to 7.5 feet above slip plate when the slip plate is above the edge of the travelway. The cut shall be plumb and straight.
2. Attach sign to support using connections shown. When multiple signs are installed on the same support, ensure the minimum clearance between each sign is maintained. See SMD(SLIP-2) for clearances based on sign types.

CONCRETE ANCHOR

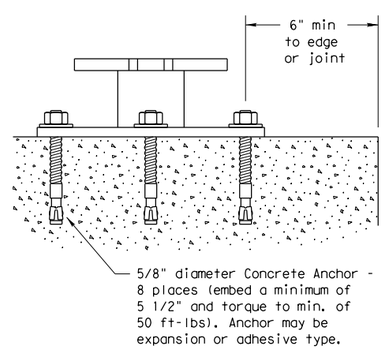

SM RD SGN ASSM TY XXXXX(X)SB(X-XXXX)

Concrete anchor consists of 5/8" diameter stud bolt with UNC series bolt threads on the upper end. Heavy hex nut per ASTM A563, and hardened washer per ASTM F436. The stud bolt shall have a minimum yield and ultimate tensile strength of 50 and 75 KSI, respectively. Nuts, bolts and washers shall be galvanized per Item 445, "Galvanizing." Adhesive type anchors shall have stud bolts installed with Type III epoxy per DMS-6100, "Epoxies and Adhesives." Adhesive anchors may be loaded after adequate epoxy cure time per the manufacturer's recommendations. Top of bolt shall extend at least flush with top of the nut when installed. The anchor, when installed in 4000 psi normal-weight concrete with a 5 1/2" minimum embedment, shall have a minimum allowable tension and shear of 3900 and 3100 psi, respectively.

Texas Department of Transportation
Traffic Operations Division

SIGN MOUNTING DETAILS
SMALL ROADSIDE SIGNS
TRIANGULAR SLIPBASE SYSTEM

SMD(SLIP-1)-08

©TxDOT July 2002

DN: TXDOT	CK: TXDOT	DW: TXDOT	CK: TXDOT
9-08 REVISIONS			

CONT	SECT	JOB	HIGHWAY
3544	04		SH0211

DIST	COUNTY	SHEET NO.
SAT	BEXAR	25

26B

DISCLAIMER: The use of this standard is governed by the "Texas Engineering Practice Act". No warranty of any kind is made by TxDOT for any purpose whatsoever. TxDOT assumes no responsibility for the conversion of this standard to other formats or for incorrect results or damages resulting from its use.

DATE: 12/6/2022 5:50:11 PM
FILE: P:\89\46\24\Design\Transpo\Standards\smds1.dgn

DISCLAIMER: The use of this standard is governed by the "Texas Engineering Practice Act". No warranty of any kind is made by TxDOT for any purpose whatsoever. TxDOT assumes no responsibility for the conversion of this standard to other formats or for incorrect results or damages resulting from its use.

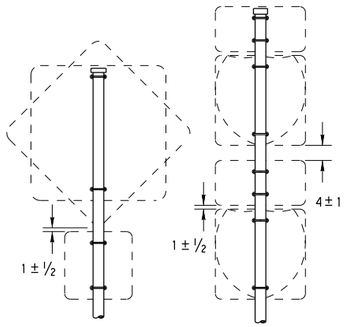

SM RD SGN ASSM TY XXXXX(1)XX(P)

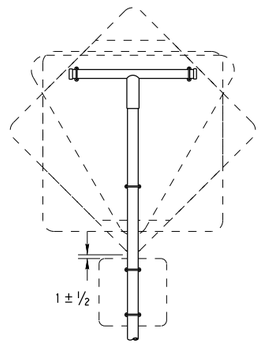

SM RD SGN ASSM TY XXXXX(1)XX(T)

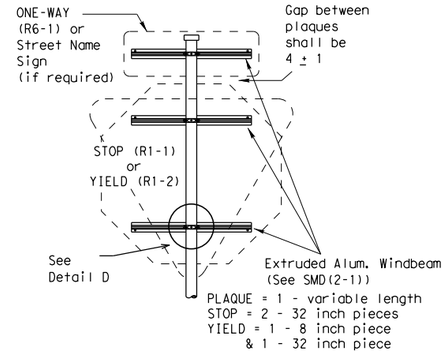

SM RD SGN ASSM TY XXXXX(1)XX(P-BM)

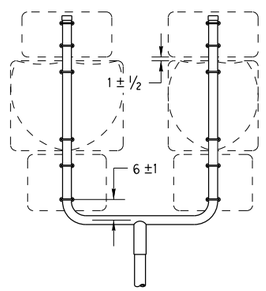

SM RD SGN ASSM TY XXXXX(1)XX(U)

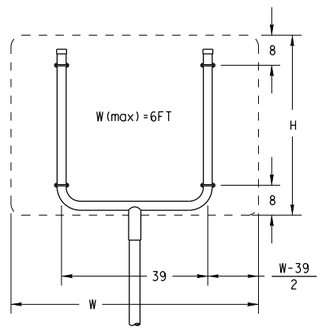

SM RD SGN ASSM TY XXXXX(1)XX(U)

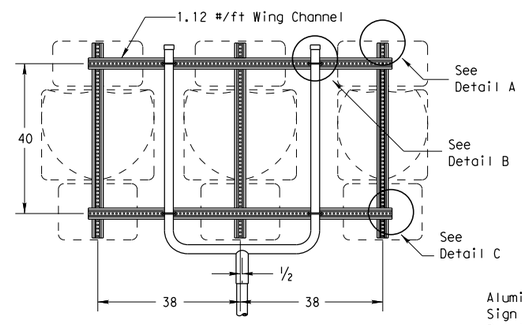

SM RD SGN ASSM TY XXXXX(1)XX(U-WC)
(See Note 11)

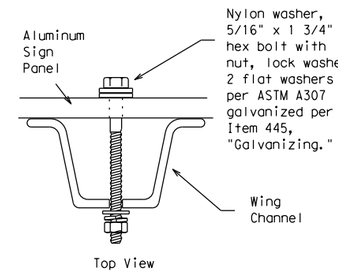

Detail A

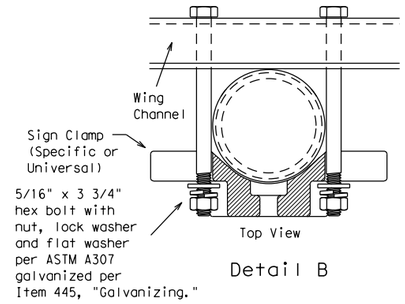

Detail B

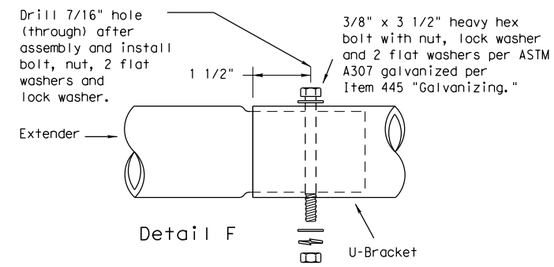

Detail F

Splices shall only be allowed behind the sign substrate.

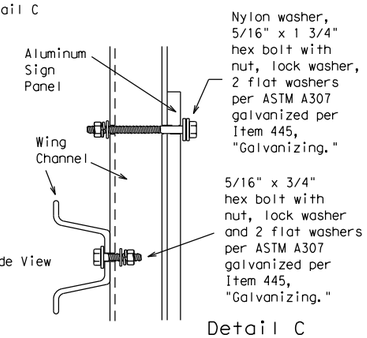

SIDE VIEW

Detail C

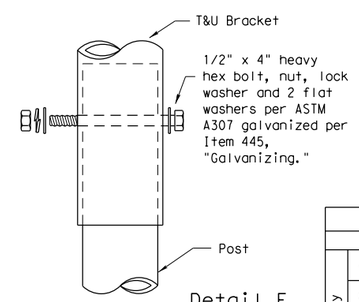

Detail E

GENERAL NOTES:

1.

SIGN SUPPORT	# OF POSTS	MAX. SIGN AREA
10 BWG	1	16 SF
10 BWG	2	32 SF
Sch 80	1	32 SF
Sch 80	2	64 SF

2. The Engineer may require that a Schedule 80 post be used in place of a 10 BWG where a sign height is abnormally high due to a fill slope.
3. Sign supports shall not be spliced except where shown. Sign support posts shall not be spliced.
4. Aluminum sign blanks shall conform to Departmental Material Specifications DMS-7110 and shall have the following minimum thicknesses: 0.080 for signs less than 7.5 sq. ft., 0.100 for signs 7.5 to 15 sq. ft., and 0.125 for signs greater than 15 sq. ft.
5. Signs that require specific supports due to reasons in addition to windloading are indicated on the "REQUIRED SUPPORT" table on this sheet.
6. For horizontal rectangular signs fabricated from flat aluminum, T-brackets are used for signs 24 inches or less in height. U-brackets are used for signs of greater height.
7. When two triangular slipbase supports are used to support a single sign, they shall not be "rigidly" connected to each other except through the sign panel. This will allow each support to act independently when impacted by an errant vehicle.
8. Wing channel shall meet ASTM A 1011 SS Gr 50 and be galvanized per ASTM A 123.
9. Excess pipe, wing channel, or windbeam shall be cut off so that it does not extend beyond the sign panel (i.e., excess support shall not be visible when the sign is viewed from the front.) Repair galvanized coating at cut support ends per Item 445, "Galvanizing."
10. Additional route markers may be added vertically, provided the total sign area does not exceed the maximum allowable amount per Note 1.
11. Additional sign clamp required on the "T-bracket" post for 24 inch height signs. Place the clamp 3 inches above bottom of sign when possible.
12. Post open ends shall be fitted with Friction Caps.
13. Sign blanks shall be the sizes and shapes shown on the plans.

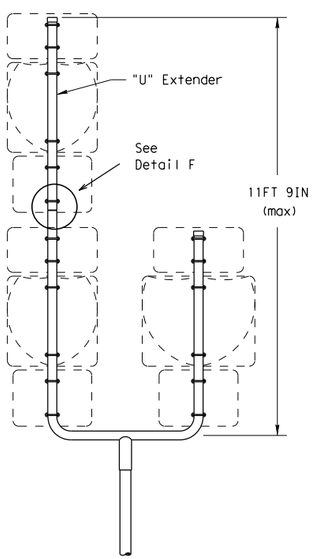

SM RD SGN ASSM TY S80(1)XX(U-1EXT)

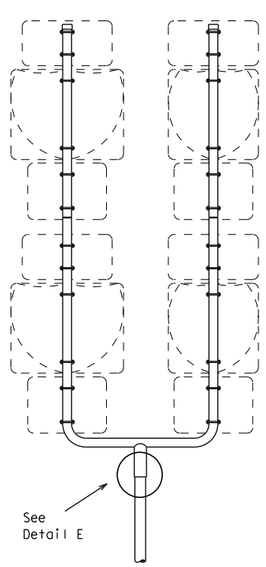

SM RD SGN ASSM TY S80(1)XX(U-2EXT)

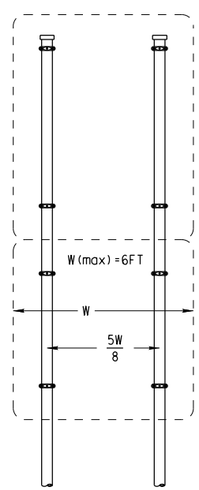

SM RD SGN ASSYM TY XXXXX(2)XX(P)

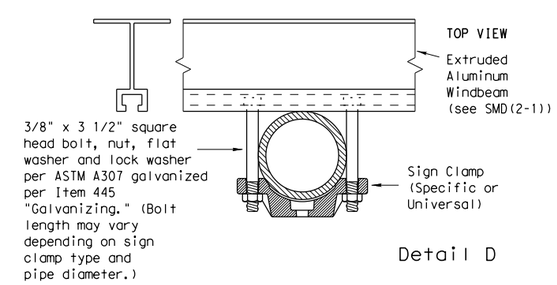

Detail D

REQUIRED SUPPORT

	SIGN DESCRIPTION	SUPPORT
Regulatory	48-inch STOP sign (R1-1)	TY 10BWG(1)XX(T) TY 10BWG(1)XX(P-BM)
Regulatory	60-inch YIELD sign (R1-2)	TY 10BWG(1)XX(T) TY 10BWG(1)XX(P-BM)
Regulatory	48x16-inch ONE-WAY sign (R6-1)	TY 10BWG(1)XX(T) TY 10BWG(1)XX(P-BM)
Regulatory	36x48, 48x36, and 48x48-inch signs	TY 10BWG(1)XX(T)
Regulatory	48x60-inch signs	TY S80(1)XX(T)
Warning	48x48-inch signs (diamond or square)	TY 10BWG(1)XX(T)
Warning	48x60-inch signs	TY S80(1)XX(T)
Warning	48-inch Advance School X-ing sign (S1-1)	TY 10BWG(1)XX(T)
Warning	48-inch School X-ing sign (S2-1)	TY 10BWG(1)XX(T)
Warning	Large Arrow sign (W1-6 & W1-7)	TY 10BWG(1)XX(T)

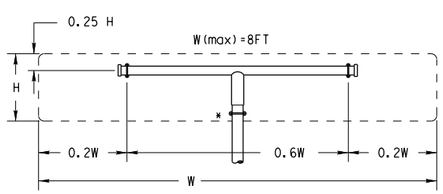

All dimensions are in english unless detailed otherwise.

SM RD SGN ASSM TY XXXXX(1)XX(T)
(* - See Note 12)

FRICTION CAP DETAIL

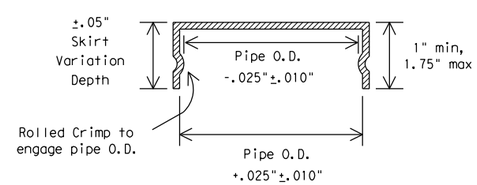

Friction caps may be manufactured from hot rolled or cold rolled steel sheets. The minimum sheet metal thickness shall be 24 gauge for all cap sizes.

The rim edges shall be reasonably straight and smooth. Caps shall be sized and formed in such a manner as to produce a drive-on friction fit and have no tendency to rock when seated on the pipe. The depth shall be sufficient to give positive protection against entrance of rainwater. They shall be free of sharp creases or indentations and show no evidence of metal fracture.

Caps shall have an electrodeposited coating of zinc in accordance with the requirements of ASTM B633 Class FE/ZN 8.

Texas Department of Transportation
Traffic Operations Division

SIGN MOUNTING DETAILS SMALL ROADSIDE SIGNS TRIANGULAR SLIPBASE SYSTEM

SMD(SLIP-2)-08

©TxDOT July 2002

DN: TXDOT	CK: TXDOT	DW: TXDOT	CK: TXDOT
CONT	SECT	JOB	HIGHWAY
3544	04		SH0211
DIST		COUNTY	SHEET NO.
SAT		BEXAR	26

9-08 REVISIONS

26C

DATE: 12/6/2022 5:50:12 PM
FILE: P:\89\46\24\Design\Transpo\Standards\smds2.dgn

DISCLAIMER: The use of this standard is governed by the "Texas Engineering Practice Act". No warranty of any kind is made by TxDOT for any purpose whatsoever. TxDOT assumes no responsibility for the conversion of this standard to other formats or for incorrect results or damages resulting from its use.

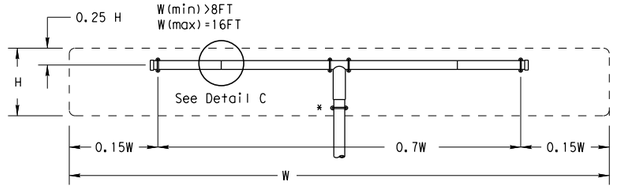

SM RD SGN ASSM TY XXXXX(1)XX(T-2EXT)

(* - See Note 12)

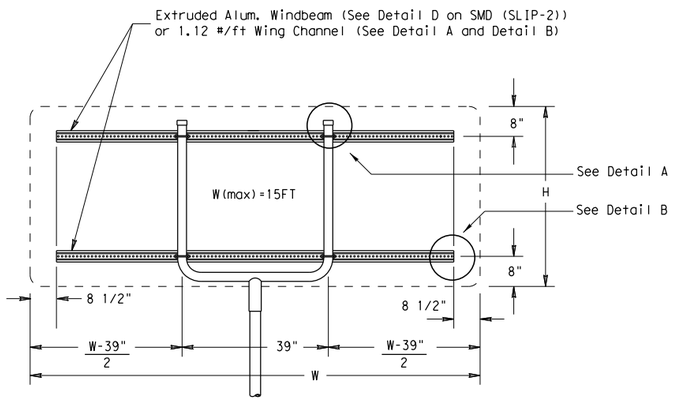

SM RD SGN ASSM TY XXXXX(1)XX(U-XX)

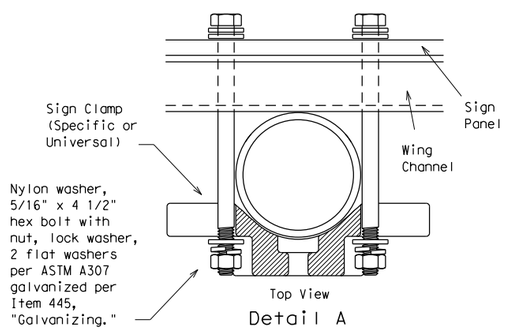

Detail A

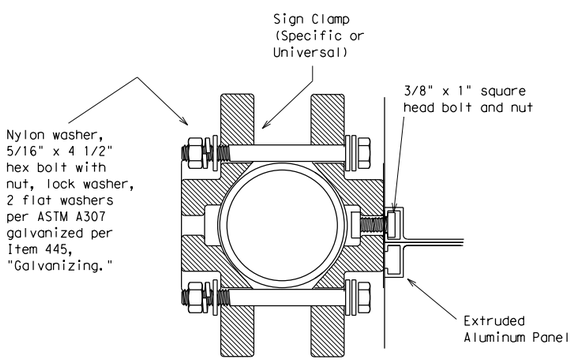

Detail D

EXTRUDED ALUMINUM SIGN WITH T BRACKET

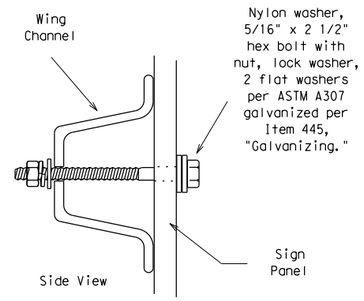

Detail B

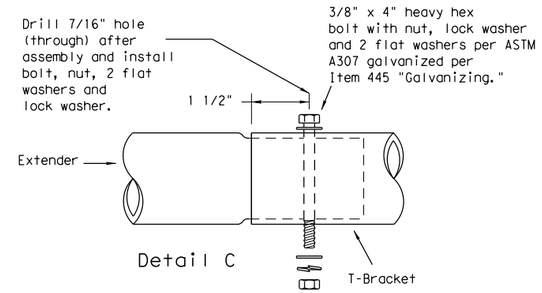

Detail C

Splices shall only be allowed behind the sign substrate.

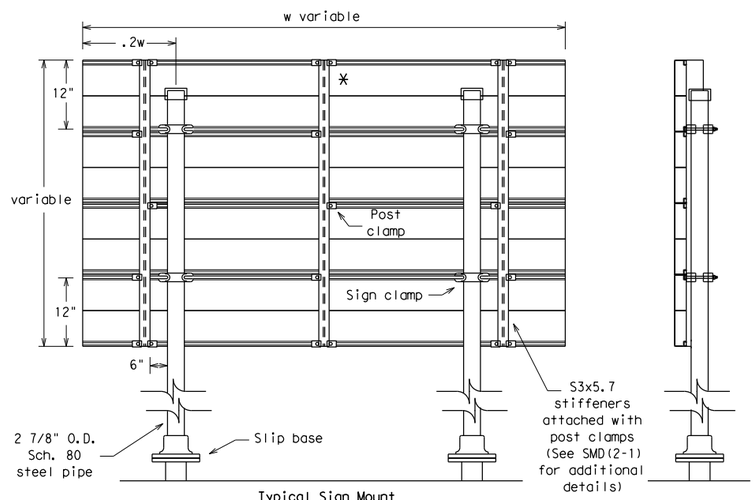

Typical Sign Mount

SM RD SGN ASSM TY S80(2)XX(P-EXAL)

* Additional stiffener placed at approximate center of signs when sign width is greater than 10'.

See Detail E for clamp installation

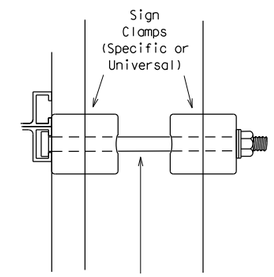

3/8" x 4 1/2"
square head
bolt, nut,
flat washer
and lock washer per
ASTM A307 galvanized
per Item 445,
"Galvanizing."

Detail E

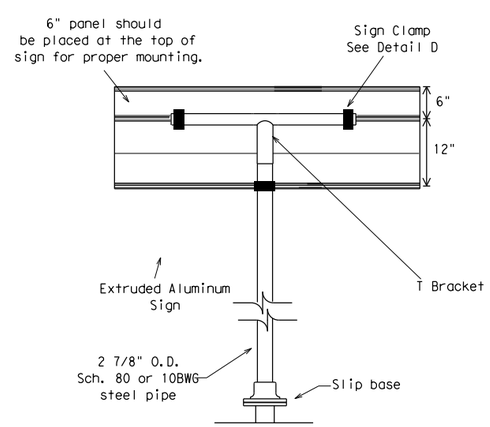

Extruded Aluminum Sign
With T Bracket

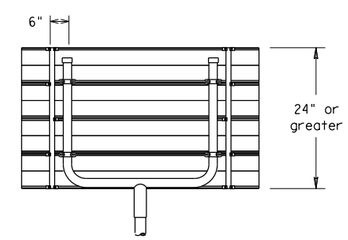

Use Extruded Alum. Windbeam as stiffeners
See SMD (2-1) for additional details

See Detail E
for clamp installation

GENERAL NOTES:

1.

SIGN SUPPORT	# OF POSTS	MAX. SIGN AREA
10 BWG	1	16 SF
10 BWG	2	32 SF
Sch 80	1	32 SF
Sch 80	2	64 SF

2. The Engineer may require that a Schedule 80 post be used in place of a 10 BWG where a sign height is abnormally high due to a fill slope.
3. Sign supports shall not be spliced except where shown. Sign support posts shall not be spliced.
4. Aluminum sign blanks shall conform to Departmental Material Specifications DMS-7110 and shall have the following minimum thicknesses: 0.080 for signs less than 7.5 sq. ft., 0.100 for signs 7.5 to 15 sq. ft., and 0.125 for signs greater than 15 sq. ft.
5. Signs that require specific supports due to reasons in addition to windloading are indicated on the "REQUIRED SUPPORT" table on this sheet.
6. For horizontal rectangular signs fabricated from flat aluminum, T-brackets are used for signs 24 inches or less in height. U-brackets are used for signs of greater height.
7. When two triangular slipbase supports are used to support a single sign, they shall not be "rigidly" connected to each other except through the sign panel. This will allow each support to act independently when impacted by an errant vehicle.
8. Wing channel shall meet ASTM A 1011 SS Gr 50 and be galvanized per ASTM A 123.
9. Excess pipe, wing channel, or windbeam shall be cut off so that it does not extend beyond the sign panel (i.e., excess support shall not be visible when the sign is viewed from the front.) Repair galvanized coating at cut support ends per Item 445, "Galvanizing."
10. Sign blanks shall be the sizes and shapes shown on the plans.
11. Additional sign clamp required on the "T-bracket" post for 24 inch high signs. Place the clamp 3 inches above bottom of sign when possible.
12. Post open ends shall be fitted with Friction Caps.

REQUIRED SUPPORT

	SIGN DESCRIPTION	SUPPORT
Regulatory	48-inch STOP sign (R1-1)	TY 10BWG(1)XX(T) TY 10BWG(1)XX(P-BM)
Regulatory	60-inch YIELD sign (R1-2)	TY 10BWG(1)XX(T) TY 10BWG(1)XX(P-BM)
Regulatory	48x16-inch ONE-WAY sign (R6-1)	TY 10BWG(1)XX(T) TY 10BWG(1)XX(P-BM)
Regulatory	36x48, 48x36, and 48x48-inch signs	TY 10BWG(1)XX(T)
Regulatory	48x60-inch signs	TY S80(1)XX(T)
Warning	48x48-inch signs (diamond or square)	TY 10BWG(1)XX(T)
Warning	48x60-inch signs	TY S80(1)XX(T)
Warning	48-inch Advance School X-ing sign (S1-1)	TY 10BWG(1)XX(T)
Warning	48-inch School X-ing sign (S2-1)	TY 10BWG(1)XX(T)
Warning	Large Arrow sign (W1-6 & W1-7)	TY 10BWG(1)XX(T)

Texas Department of Transportation
Traffic Operations Division

SIGN MOUNTING DETAILS SMALL ROADSIDE SIGNS TRIANGULAR SLIPBASE SYSTEM

SMD(SLIP-3)-08

© TxDOT July 2002

9-08 REVISIONS

DN: TXDOT	CK: TXDOT	DW: TXDOT	CK: TXDOT

CONT	SECT	JOB	HIGHWAY
3544	04		SH0211

DIST	COUNTY	SHEET NO.
SAT	BEXAR	27

26D

DATE: 12/6/2022 5:50:13 PM
FILE: P:\89\46\24\Design\Transpo\Standards\smds3.dgn

DISCLAIMER:
The use of this standard is governed by the "Texas Engineering Practice Act". No warranty of any kind is made by TxDOT for any purpose whatsoever. TxDOT assumes no responsibility for the conversion of this standard to other formats or for incorrect results or damages resulting from its use.

DATE: 12/6/2022 5:50:14 PM
FILE: P:\89\46\24\Design\Transpo\Standards\bc-21.dgn

BARRICADE AND CONSTRUCTION (BC) STANDARD SHEETS GENERAL NOTES:

1. The Barricade and Construction Standard Sheets (BC sheets) are intended to show typical examples for placement of temporary traffic control devices, construction pavement markings, and typical work zone signs. The information contained in these sheets meet or exceed the requirements shown in the "Texas Manual on Uniform Traffic Control Devices" (TMUTCD).

2. The development and design of the Traffic Control Plan (TCP)is the responsibility of the Engineer.

3. The Contractor may propose changes to the TCP that are signed and sealed by a licensed professional engineer for approval. The Engineer may develop, sign and seal Contractor proposed changes.

4. The Contractor is responsible for installing and maintaining the traffic control devices as shown in the plans. The Contractor may not move or change the approximate location of any device without the approval of the Engineer.

5. Geometric design of lane shifts and detours should, when possible, meet the applicable design criteria contained in manuals such as the American Association of State Highway and Transportation Officials (AASHTO), "A Policy on Geometric Design of Highways and Streets," the TxDOT "Roadway Design Manual" or engineering judgment.

6. When projects abut, the Engineer(s) may omit the END ROAD WORK, TRAFFIC FINES DOUBLE, and other advance warning signs if the signing would be redundant and the work areas appear continuous to the motorists. If the adjacent project is completed first, the Contractor shall erect the necessary warning signs as shown on these sheets, the TCP sheets or as directed by the Engineer. The BEGIN ROAD WORK NEXT X MILES sign shall be revised to show appropriate work zone distance.

7. The Engineer may require duplicate warning signs on the median side of divided highways where median width will permit and traffic volumes justify the signing.

8. All signs shall be constructed in accordance with the details found in the "Standard Highway Sign Designs for Texas," latest edition. Sign details not shown in this manual shall be shown in the plans or the Engineer shall provide a detail to the Contractor before the sign is manufactured.

9. The temporary traffic control devices shown in the illustrations of the BC sheets are examples. As necessary, the Engineer will determine the most appropriate traffic control devices to be used.

10. Where highway construction or maintenance work is being undertaken, other than mobile operations as defined by the Texas Manual on Uniform Traffic Control Devices, CSJ limit signs are required. CSJ limit signs are shown on BC(2). The OBEY WARNING SIGNS STATE LAW sign, STAY ALERT TALK OR TEXT LATER and the WORK ZONE TRAFFIC FINES DOUBLE sign with plaque shall be erected in advance of the CSJ limits. The BEGIN ROAD WORK NEXT X MILES, CONTRACTOR and END ROAD WORK signs shall be erected at or near the CSJ limits. For mobile operations, CSJ limit signs are not required.

11. Traffic control devices should be in place only while work is actually in progress or a definite need exists.

12. The Engineer has the final decision on the location of all traffic control devices.

13. Inactive equipment and work vehicles, including workers' private vehicles must be parked away from travel lanes. They should be as close to the right-of-way line as possible, or located behind a barrier or guardrail, or as approved by the Engineer.

WORKER SAFETY NOTES:

1. Workers on foot who are exposed to traffic or to construction equipment within the right-of-way shall wear high-visibility safety apparel meeting the requirements of ISEA "American National Standard for High-Visibility Apparel," or equivalent revisions, and labeled as ANSI 107-2004 standard performance for Class 2 or 3 risk exposure. Class 3 garments should be considered for high traffic volume work areas or night time work.

2. Except in emergency situations, flagger stations shall be illuminated when flagging is used at night.

COMPLIANT WORKZONE TRAFFIC CONTROL DEVICES

1. Only pre-qualified products shall be used. The "Compliant Work Zone Traffic Control Devices List" (CWZTCD) describes pre-qualified products and their sources.

2. Work zone traffic control devices shall be compliant with the Manual for Assessing safety Hardware (MASH).

THE DOCUMENTS BELOW CAN BE FOUND ON-LINE AT http://www.txdot.gov
COMPLIANT WORK ZONE TRAFFIC CONTROL DEVICES LIST (CWZTCD)
DEPARTMENTAL MATERIAL SPECIFICATIONS (DMS)
MATERIAL PRODUCER LIST (MPL)
ROADWAY DESIGN MANUAL - SEE "MANUALS (ONLINE MANUALS)"
STANDARD HIGHWAY SIGN DESIGNS FOR TEXAS (SHSD)
TEXAS MANUAL ON UNIFORM TRAFFIC CONTROL DEVICES (TMUTCD)
TRAFFIC ENGINEERING STANDARD SHEETS

Texas Department of Transportation — Traffic Safety Division Standard

BARRICADE AND CONSTRUCTION GENERAL NOTES AND REQUIREMENTS

BC(1)-21

FILE: bc-21.dgn	DN: TxDOT	CK: TxDOT	DW: TxDOT	CK: TxDOT
© TxDOT November 2002	CONT	SECT	JOB	HIGHWAY
REVISIONS	3544	04		SH0211
4-03 7-13	DIST	COUNTY		SHEET NO.
9-07 8-14				
5-10 5-21	SAT	BEXAR		28

DISCLAIMER:
The use of this standard is governed by the "Texas Engineering Practice Act". No warranty of any kind is made by TxDOT for any purpose whatsoever. TxDOT assumes no responsibility for the conversion of this standard to other formats or for incorrect results or damages resulting from its use.

TYPICAL LOCATION OF CROSSROAD SIGNS

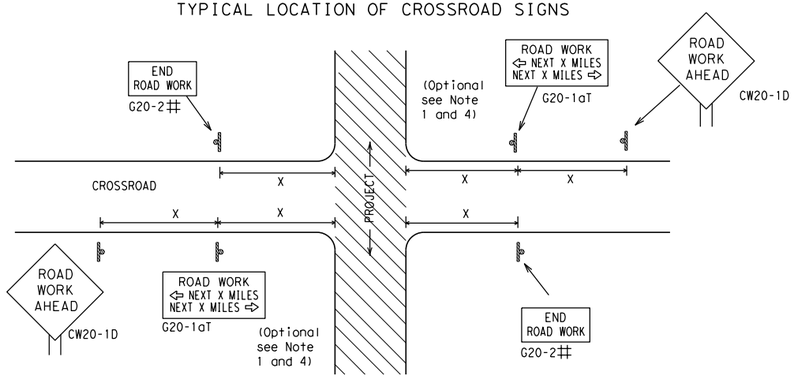

May be mounted on back of "ROAD WORK AHEAD"(CW20-1D) sign with approval of Engineer. (See note 2 below)

1. The typical minimum signing on a crossroad approach should be a "ROAD WORK AHEAD" (CW20-1D)sign and a (G20-2) "END ROAD WORK" sign, unless noted otherwise in plans.
2. The Engineer may use the reduced size 36" x 36" ROAD WORK AHEAD (CW20-1D) sign mounted back to back with the reduced size 36" x 18" "END ROAD WORK"(G20-2) sign on low volume crossroads (see Note 4 under "Typical Construction Warning Sign Size and Spacing"). See the "Standard Highway Sign Designs for Texas" manual for sign details. The Engineer may omit the advance warning signs on low volume crossroads. The Engineer will determine whether a road is low volume as per TMUTCD Part 5. This information shall be shown in the plans.
3. Based on existing field conditions, the Engineer/Inspector may require additional signs such as FLAGGER AHEAD, LOOSE GRAVEL, or other appropriate signs. When additional signs are required, these signs will be considered part of the minimum requirements. The Engineer/Inspector will determine the proper location and spacing of any sign not shown on the BC sheets, Traffic Control Plan sheets or the Work Zone Standard Sheets.
4. The "ROAD WORK NEXT X MILES"(G20-1aT)sign shall be required at high volume crossroads to advise motorists of the length of construction in either direction from the intersection. The Engineer will determine whether a roadway is considered high volume.
5. Additional traffic control devices may be shown elsewhere in the plans for higher volume crossroads.
6. When work occurs in the intersection area, appropriate traffic control devices, as shown elsewhere in the plans or as determined by the Engineer/Inspector, shall be in place.

T-INTERSECTION

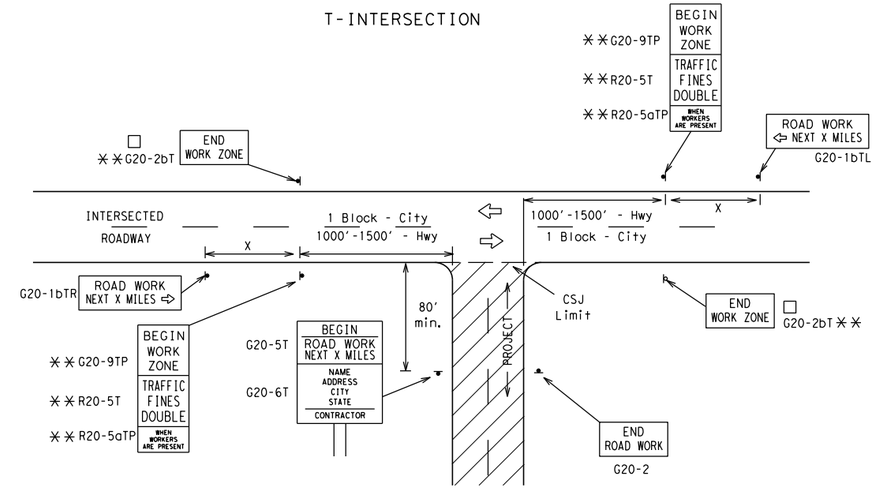

CSJ LIMITS AT T-INTERSECTION

1. The Engineer will determine the types and location of any additional traffic control devices, such as a flagger and accompanying signs, or other signs, that should be used when work is being performed at or near an intersection.
2. If construction closes the road at a T-intersection, the Contractor shall place the "CONTRACTOR NAME"(G20-6T) sign behind the Type 3 Barricades for the road closure (see BC(10) also). The "ROAD WORK NEXT X MILES" left arrow(G20-1bTL) and "ROAD WORK NEXT X MILES" right arrow (G20-1bTR)" signs shall be replaced by the detour signing called for in the plans.

TYPICAL CONSTRUCTION WARNING SIGN SIZE AND SPACING[1,5,6]

SIZE

Sign Number or Series	Conventional Road	Expressway/ Freeway
CW20[4] CW21 CW22 CW23 CW25	48" x 48"	48" x 48"
CW1, CW2, CW7, CW8, CW9, CW11, CW14	36" x 36"	48" x 48"
CW3, CW4, CW5, CW6, CW8-3, CW10, CW12	48" x 48"	48" x 48"

SPACING

Posted Speed	Sign △ Spacing "X"
MPH	Feet (Apprx.)
30	120
35	160
40	240
45	320
50	400
55	500[2]
60	600[2]
65	700[2]
70	800[2]
75	900[2]
80	1000[2]
✱	✱[3]

✱ For typical sign spacings on divided highways, expressways and freeways, see Part 6 of the "Texas Manual on Uniform Traffic Control Devices" (TMUTCD) typical application diagrams or TCP Standard Sheets.

△ Minimum distance from work area to first Advance Warning sign nearest the work area and/or distance between each additional sign.

GENERAL NOTES

1. Special or larger size signs may be used as necessary.
2. Distance between signs should be increased as required to have 1500 feet advance warning.
3. Distance between signs should be increased as required to have 1/2 mile or more advance warning.
4. 36" x 36" "ROAD WORK AHEAD" (CW20-1D)signs may be used on low volume crossroads at the discretion of the Engineer as per TMUTCD Part 5. See Note 2 under "Typical Location of Crossroad Signs".
5. Only diamond shaped warning sign sizes are indicated.
6. See sign size listing in "TMUTCD", Sign Appendix or the "Standard Highway Sign Designs for Texas" manual for complete list of available sign design sizes.

WORK AREAS IN MULTIPLE LOCATIONS WITHIN CSJ LIMITS

SAMPLE LAYOUT OF SIGNING FOR WORK BEGINNING AT THE CSJ LIMITS

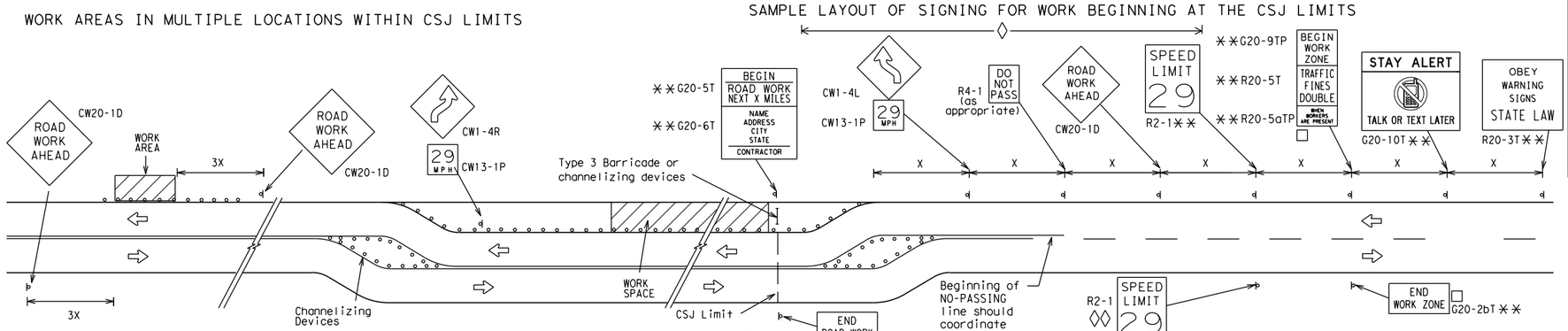

When extended distances occur between minimal work spaces, the Engineer/Inspector should ensure additional "ROAD WORK AHEAD"(CW20-1D)signs are placed in advance of these work areas to remind drivers they are still within the project limits. See the applicable TCP sheets for exact location and spacing of signs and channelizing devices.

SAMPLE LAYOUT OF SIGNING FOR WORK BEGINNING DOWNSTREAM OF THE CSJ LIMITS

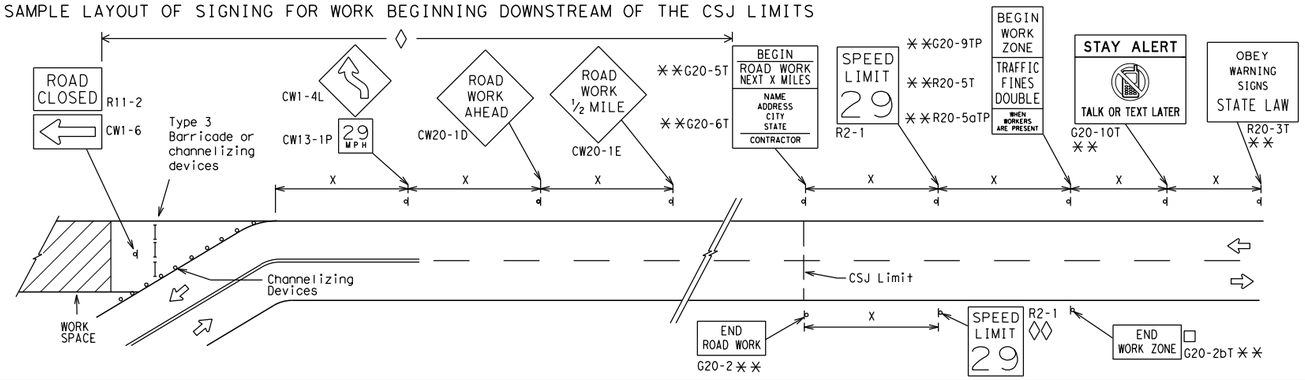

NOTES

The Contractor shall determine the appropriate distance to be placed on the G20-1 series signs and "BEGIN ROAD WORK NEXT X MILES"(G20-5T)sign for each specific project. This distance shall represent the "X" and shall be rounded to the nearest whole mile with the approval of the Engineer. No decimals shall be used.

□ The "BEGIN WORK ZONE"(G20-9TP) and "END WORK ZONE" (G20-2bT) shall be used as shown on the sample layout when advance signs are required outside the CSJ Limits. They inform the motorist of entering or leaving a part of the work zone lying outside the CSJ Limits where traffic fines may double if workers are present.

✱✱ CSJ limit signing is required for highway construction and maintenance work, with the exception of mobile operations.

◊ Area for placement of "ROAD WORK AHEAD" (CW20-1D)sign and other signs or devices as called for on the Traffic Control Plan.

◊◊ Contractor will install a regulatory speed limit sign at the end of the work zone.

LEGEND	
⊢⊣	Type 3 Barricade
○ ○ ○	Channelizing Devices
▬	Sign
X	See Typical Construction Warning Sign Size and Spacing chart or the TMUTCD for sign spacing requirements.

SHEET 2 OF 12

Texas Department of Transportation — Traffic Safety Division Standard

BARRICADE AND CONSTRUCTION PROJECT LIMIT

BC(2)-21

FILE: bc-21.dgn	DN: TxDOT	CK: TxDOT	DW: TxDOT	CK: TxDOT
©TxDOT November 2002	CONT	SECT	JOB	HIGHWAY
REVISIONS	3544	04		SH0211
9-07 8-14	DIST		COUNTY	SHEET NO.
7-13 5-21	SAT		BEXAR	29

DATE: 12/6/2022 5:50:15 PM
FILE: P:\89\46\24\Design\Transpo\Standards\bc-21.dgn

TYPICAL APPLICATION OF WORK ZONE SPEED LIMIT SIGNS

Work zone speed limits shall be regulatory, established in accordance with the "Procedures for Establishing Speed Zones," and approved by the Texas Transportation Commission, or by City Ordinance when within Incorporated City Limits.

Reduced speeds should only be posted in the vicinity of work activity and not throughout the entire project.

Regulatory work zone speed signs (R2-1) shall be removed or covered during periods when they are not needed.

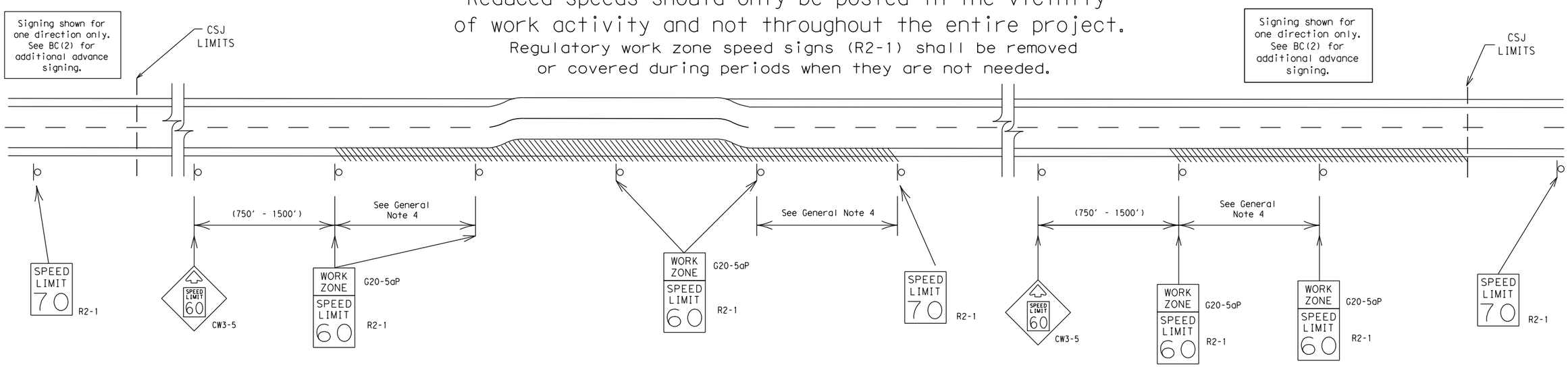

GUIDANCE FOR USE:

LONG/INTERMEDIATE TERM WORK ZONE SPEED LIMITS

This type of work zone speed limit should be included on the design of the traffic control plans when restricted geometrics with a lower design speed are present in the work zone and modification of the geometrics to a higher design speed is not feasible.

Long/Intermediate Term Work Zone Speed Limit signs, when approved as described above, should be posted and visible to the motorist when work activity is present. Work activity may also be defined as a change in the roadway that requires a reduced speed for motorists to safely negotiate the work area, including:

a) rough road or damaged pavement surface
b) substantial alteration of roadway geometrics (diversions)
c) construction detours
d) grade
e) width
f) other conditions readily apparent to the driver

As long as any of these conditions exist, the work zone speed limit signs should remain in place.

SHORT TERM WORK ZONE SPEED LIMITS

This type of work zone speed limit may be included on the design of the traffic control plans when workers or equipment are not behind concrete barrier, when work activity is within 10 feet of the traveled way or actually in the traveled way.

Short Term Work Zone Speed Limit signs should be posted and visible to the motorists only when work activity is present. When work activity is not present, signs shall be removed or covered.
(See Removing or Covering on BC(4)).

GENERAL NOTES

1. Regulatory work zone speed limits should be used only for sections of construction projects where speed control is of major importance.
2. Regulatory work zone speed limit signs shall be placed on supports at a 7 foot minimum mounting height.
3. Speed zone signs are illustrated for one direction of travel and are normally posted for each direction of travel.
4. Frequency of work zone speed limit signs should be:
   40 mph and greater 0.2 to 2 miles
   35 mph and less 0.2 to 1 mile
5. Regulatory speed limit signs shall have black legend and border on a white reflective background (See "Reflective Sheeting" on BC(4)).
6. Fabrication, erection and maintenance of the"ADVANCE SPEED LIMIT"(CW3-5)sign, "WORK ZONE"(G20-5aP) plaque and the "SPEED LIMIT"(R2-1)signs shall not be paid for directly, but shall be considered subsidiary to Item 502.
7. Turning signs from view, laying signs over or down will not be allowed, unless as otherwise noted under "REMOVING OR COVERING" on BC(4).
8. Techniques that may help reduce traffic speeds include but are not limited to:
   A. Law enforcement.
   B. Flagger stationed next to sign.
   C. Portable changeable message sign (PCMS).
   D. Low-power (drone) radar transmitter.
   E. Speed monitor trailers or signs.
9. Speeds shown on details above are for illustration only. Work Zone Speed Limits should only be posted as approved for each project.
10. For more specific guidance concerning the type of work, work zone conditions and factors impacting allowable regulatory construction speed zone reduction see TxDOT form #1204 in the TxDOT e-form system.

DISCLAIMER:
The use of this standard is governed by the "Texas Engineering Practice Act". No warranty of any kind is made by TxDOT for any purpose whatsoever. TxDOT assumes no responsibility for the conversion of this standard to other formats or for incorrect results or damages resulting from its use.

DATE: 12/6/2022 5:50:15 PM
FILE: P:\89\46\24\Design\Transpo\Standards\bc-21.dgn

Texas Department of Transportation — Traffic Safety Division Standard

BARRICADE AND CONSTRUCTION
WORK ZONE SPEED LIMIT

BC(3)-21

FILE: bc-21.dgn	DN: TxDOT	CK: TxDOT	DW: TxDOT	CK: TxDOT
© TxDOT November 2002	CONT	SECT	JOB	HIGHWAY
REVISIONS	3544	04		SH0211
9-07 8-14	DIST		COUNTY	SHEET NO.
7-13 5-21	SAT		BEXAR	30

TYPICAL MINIMUM CLEARANCES FOR LONG TERM AND INTERMEDIATE TERM SIGNS

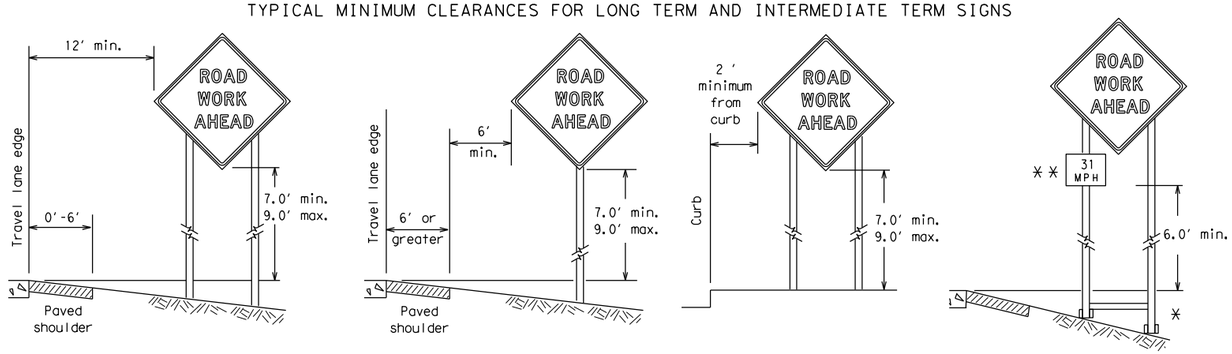

✳ When placing skid supports on unlevel ground, the leg post lengths must be adjusted so the sign appears straight and plumb. Objects shall NOT be placed under skids as a means of leveling.

✳✳ When plaques are placed on dual-leg supports, they should be attached to the upright nearest the travel lane. Supplemental plaques (advisory or distance) should not cover the surface of the parent sign.

ATTACHMENT FOR SIGN SUPPORTS

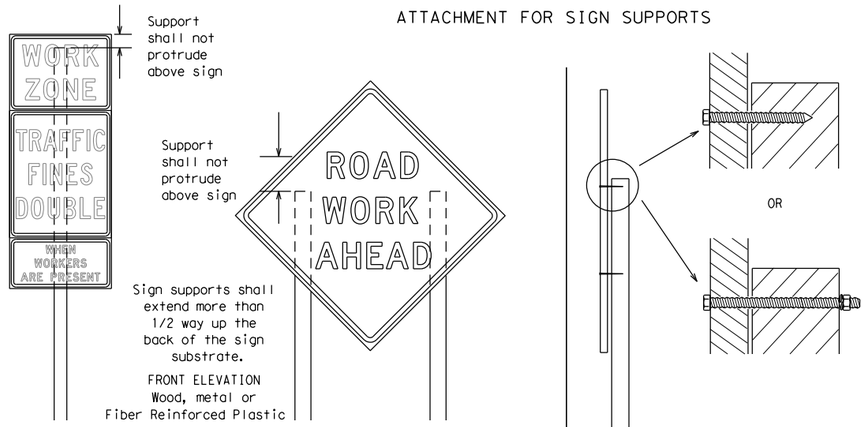

Attachment to wooden supports will be by bolts and nuts or screws. Use TxDOT's or manufacturer's recommended procedures for attaching sign substrates to other types of sign supports

Nails shall NOT be allowed. Each sign shall be attached directly to the sign support. Multiple signs shall not be joined or spliced by any means. Wood supports shall not be extended or repaired by splicing or other means.

Splicing embedded perforated square metal tubing in order to extend post height will only be allowed when the splice is made using four bolts, two above and two below the spice point. Splice must be located entirely behind the sign substrate, not near the base of the support. Splice insert lengths should be at least 5 times nominal post size, centered on the splice and of at least the same gauge material.

STOP/SLOW PADDLES

1. STOP/SLOW paddles are the primary method to control traffic by flaggers. The STOP/SLOW paddle size should be 24" x 24".
2. STOP/SLOW paddles shall be retroreflectorized when used at night.
3. STOP/SLOW paddles may be attached to a staff with a minimum length of 6' to the bottom of the sign.
4. Any lights incorporated into the STOP or SLOW paddle faces shall only be as specifically described in Section 6E.03 Hand Signaling Devices in the TMUTCD.

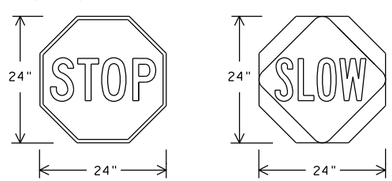

Background - Red
Legend & Border - White

Background - Orange
Legend & Border - Black

SHEETING REQUIREMENTS (WHEN USED AT NIGHT)		
USAGE	COLOR	SIGN FACE MATERIAL
BACKGROUND	RED	TYPE B OR C SHEETING
BACKGROUND	ORANGE	TYPE B_{FL} OR C_{FL} SHEETING
LEGEND & BORDER	WHITE	TYPE B OR C SHEETING
LEGEND & BORDER	BLACK	ACRYLIC NON-REFLECTIVE FILM

CONTRACTOR REQUIREMENTS FOR MAINTAINING PERMANENT SIGNS WITHIN THE PROJECT LIMITS

1. Permanent signs are used to give notice of traffic laws or regulations, call attention to conditions that are potentially hazardous to traffic operations, show route designations, destinations, directions, distances, services, points of interest, and other geographical, recreational, specific service (LOGO), or cultural information. Drivers proceeding through a work zone need the same, if not better route guidance as normally installed on a roadway without construction.
2. When permanent regulatory or warning signs conflict with work zone conditions, remove or cover the permanent signs until the permanent sign message matches the roadway condition. For details for covering large guide signs see the TS-CD standard.
3. When existing permanent signs are moved and relocated due to construction purposes, they shall be visible to motorists at all times.
4. If existing signs are to be relocated on their original supports, they shall be installed on crashworthy bases as shown on the SMD Standard sheets. The signs shall meet the required mounting heights shown on the BC Sheets or the SMD Standards. This work should be paid for under the appropriate pay item for relocating existing signs.
5. If permanent signs are to be removed and relocated using temporary supports, the Contractor shall use crashworthy supports as shown on the BC standard sheets, TLRS standard sheets or the CWZTCD list. The signs shall meet the required mounting heights shown on the BC, or the SMD standard sheets during construction. This work should be paid for under the appropriate pay item for relocating existing signs.
6. Any sign or traffic control device that is struck or damaged by the Contractor or his/her construction equipment shall be replaced as soon as possible by the Contractor to ensure proper guidance for the motorists. This will be subsidiary to Item 502.

GENERAL NOTES FOR WORK ZONE SIGNS

1. Contractor shall install and maintain signs in a straight and plumb condition and/or as directed by the Engineer.
2. Wooden sign posts shall be painted white.
3. Barricades shall NOT be used as sign supports.
4. All signs shall be installed in accordance with the plans or as directed by the Engineer. Signs shall be used to regulate, warn, and guide the traveling public safely through the work zone.
5. The Contractor may furnish either the sign design shown in the plans or in the "Standard Highway Sign Designs for Texas" (SHSD). The Engineer/Inspector may require the Contractor to furnish other work zone signs that are shown in the TMUTCD but may have been omitted from the plans. Any variation in the plans shall be documented by written agreement between the Engineer and the Contractor's Responsible Person. All changes must be documented in writing before being implemented. This can include documenting the changes in the Inspector's TxDOT diary and having both the Inspector and Contractor initial and date the agreed upon changes.
6. The Contractor shall furnish sign supports listed in the "Compliant Work Zone Traffic Control Device List" (CWZTCD) for small roadside signs. Supports for temporary large roadside signs shall meet the requirements detailed on the Temporary Large Roadside Signs (TLRS) standard sheets. The Contractor shall install the sign support in accordance with the manufacturer's recommendations. If there is a question regarding installation procedures, the Contractor shall furnish the Engineer a copy of the manufacturer's installation recommendations so the Engineer can verify the correct procedures are being followed.
7. The Contractor is responsible for installing signs on approved supports and replacing signs with damaged or cracked substrates and/or damaged or marred reflective sheeting as directed by the Engineer/Inspector.
8. Identification markings may be shown only on the back of the sign substrate. The maximum height of letters and/or company logos used for identification shall be 1 inch.
9. The Contractor shall replace damaged wood posts. New or damaged wood sign posts shall not be spliced.

DURATION OF WORK (as defined by the "Texas Manual on Uniform Traffic Control Devices" Part 6)

1. The types of sign supports, sign mounting height, the size of signs, and the type of sign substrates can vary based on the type of work being performed. The Engineer is responsible for selecting the appropriate size sign for the type of work being performed. The Contractor is responsible for ensuring the sign support, sign mounting height and substrate meets manufacturer's recommendations in regard to crashworthiness and duration of work requirements.
   a. Long-term stationary - work that occupies a location more than 3 days.
   b. Intermediate-term stationary - work that occupies a location more than one daylight period up to 3 days, or nighttime work lasting more than one hour.
   c. Short-term stationary - daytime work that occupies a location for more than 1 hour in a single daylight period.
   d. Short, duration - work that occupies a location up to 1 hour.
   e. Mobile - work that moves continuously or intermittently (stopping for up to approximately 15 minutes.)

SIGN MOUNTING HEIGHT

1. The bottom of Long-term/Intermediate-term signs shall be at least 7 feet, but not more than 9 feet, above the paved surface, except as shown for supplemental plaques mounted below other signs.
2. The bottom of Short-term/Short Duration signs shall be a minimum of 1 foot above the pavement surface but no more than 2 feet above the ground.
3. Long-term/Intermediate-term Signs may be used in lieu of Short-term/Short Duration signing.
4. Short-term/Short Duration signs shall be used only during daylight and shall be removed at the end of the workday or raised to appropriate Long-term/Intermediate sign height.
5. Regulatory signs shall be mounted at least 7 feet, but not more than 9 feet, above the paved surface regardless of work duration.

SIZE OF SIGNS

1. The Contractor shall furnish the sign sizes shown on BC (2) unless otherwise shown in the plans or as directed by the Engineer.

SIGN SUBSTRATES

1. The Contractor shall ensure the sign substrate is installed in accordance with the manufacturer's recommendations for the type of sign support that is being used. The CWZTCD lists each substrate that can be used on the different types and models of sign supports.
2. "Mesh" type materials are NOT an approved sign substrate, regardless of the tightness of the weave.
3. All wooden individual sign panels fabricated from 2 or more pieces shall have one or more plywood cleat, 1/2" thick by 6" wide, fastened to the back of the sign and extending fully across the sign. The cleat shall be attached to the back of the sign using wood screws that do not penetrate the face of the sign panel. The screws shall be placed on both sides of the splice and spaced at 6" centers. The Engineer may approve other methods of splicing the sign face.

REFLECTIVE SHEETING

1. All signs shall be retroreflective and constructed of sheeting meeting the color and retro-reflectivity requirements of DMS-8300 for rigid signs or DMS-8310 for roll-up signs. The web address for DMS specifications is shown on BC(1).
2. White sheeting, meeting the requirements of DMS-8300 Type A, shall be used for signs with a white background.
3. Orange sheeting, meeting the requirements of DMS-8300 Type B_{FL} or Type C_{FL}, shall be used for rigid signs with orange backgrounds.

SIGN LETTERS

1. All sign letters and numbers shall be clear, and open rounded type uppercase alphabet letters as approved by the Federal Highway Administration (FHWA) and as published in the "Standard Highway Sign Design for Texas" manual. Signs, letters and numbers shall be of first class workmanship in accordance with Department Standards and Specifications.

REMOVING OR COVERING

1. When sign messages may be confusing or do not apply, the signs shall be removed or completely covered.
2. Long-term stationary or intermediate stationary signs installed on square metal tubing may be turned away from traffic 90 degrees when the sign message is not applicable. This technique may not be used for signs installed in the median of divided highways or near any intersections where the sign may be seen from approaching traffic.
3. Signs installed on wooden skids shall not be turned at 90 degree angles to the roadway. These signs should be removed or completely covered when not required.
4. When signs are covered, the material used shall be opaque, such as heavy mil black plastic, or other materials which will cover the entire sign face and maintain their opaque properties under automobile headlights at night, without damaging the sign sheeting.
5. Burlap shall NOT be used to cover signs.
6. Duct tape or other adhesive material shall NOT be affixed to a sign face.
7. Signs and anchor stubs shall be removed and holes backfilled upon completion of work.

SIGN SUPPORT WEIGHTS

1. Where sign supports require the use of weights to keep from turning over, the use of sandbags with dry, cohesionless sand should be used.
2. The sandbags will be tied shut to keep the sand from spilling and to maintain a constant weight.
3. Rock, concrete, iron, steel or other solid objects shall not be permitted for use as sign support weights.
4. Sandbags should weigh a minimum of 35 lbs and a maximum of 50 lbs.
5. Sandbags shall be made of a durable material that tears upon vehicular impact. Rubber (such as tire inner tubes) shall NOT be used.
6. Rubber ballasts designed for channelizing devices should not be used for ballast on portable sign supports. Sign supports designed and manufactured with rubber bases may be used when shown on the CWZTCD list.
7. Sandbags shall only be placed along or laid over the base supports of the traffic control device and shall not be suspended above ground level or hung with rope, wire, chains or other fasteners. Sandbags shall be placed along the length of the skids to weigh down the sign support.
8. Sandbags shall NOT be placed under the skid and shall not be used to level sign supports placed on slopes.

FLAGS ON SIGNS

1. Flags may be used to draw attention to warning signs. When used, the flag shall be 16 inches square or larger and shall be orange or fluorescent red-orange in color. Flags shall not be allowed to cover any portion of the sign face.

Texas Department of Transportation

Traffic Safety Division Standard

BARRICADE AND CONSTRUCTION TEMPORARY SIGN NOTES

BC(4)-21

FILE: bc-21.dgn	DN: TxDOT	CK: TxDOT	DW: TxDOT	CK: TxDOT
© TxDOT November 2002	CONT	SECT	JOB	HIGHWAY
REVISIONS	3544	04		SH0211
9-07 8-14	DIST		COUNTY	SHEET NO.
7-13 5-21	SAT		BEXAR	31

DISCLAIMER:
The use of this standard is governed by the "Texas Engineering Practice Act". No warranty of any kind is made by TxDOT for any purpose whatsoever. TxDOT assumes no responsibility for the conversion of this standard to other formats or for incorrect results or damages resulting from its use.

DATE: 12/6/2022 5:50:15 PM
FILE: P:\89146\24\Design\Transpo\Standards\bc-21.dgn

DISCLAIMER:
The use of this standard is governed by the "Texas Engineering Practice Act". No warranty of any kind is made by TxDOT for any purpose whatsoever. TxDOT assumes no responsibility for the conversion of this standard to other formats or for incorrect results or damages resulting from its use.

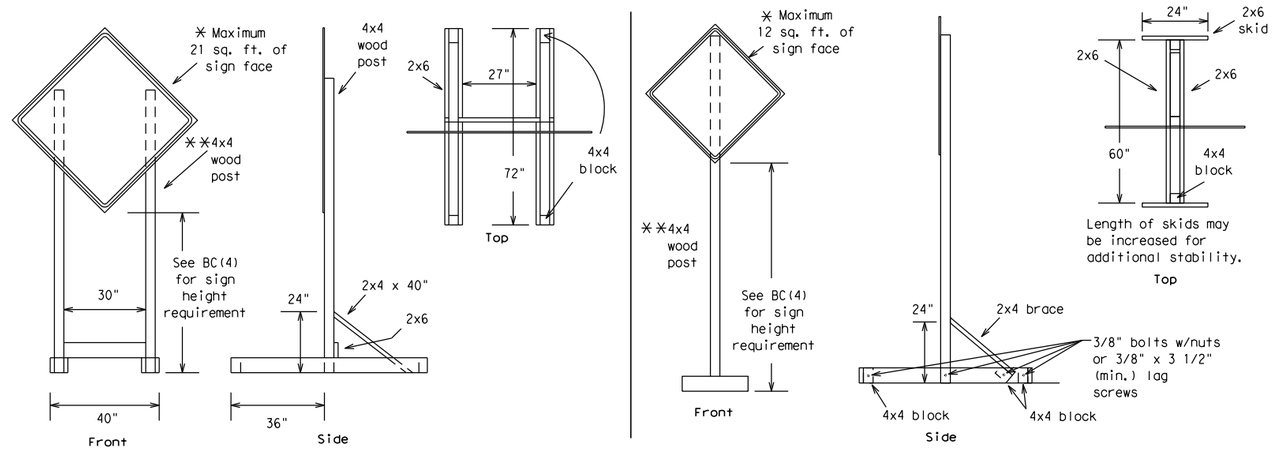

SKID MOUNTED WOOD SIGN SUPPORTS

✳ LONG/INTERMEDIATE TERM STATIONARY - PORTABLE SKID MOUNTED SIGN SUPPORTS

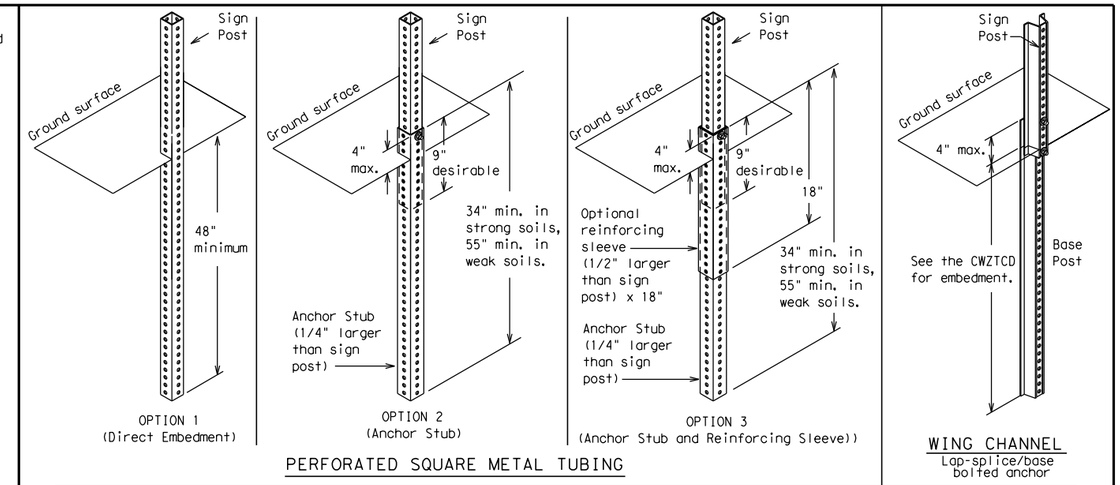

PERFORATED SQUARE METAL TUBING

GROUND MOUNTED SIGN SUPPORTS

Refer to the CWZTCD and the manufacturer's installation procedure for each type sign support.
The maximum sign square footage shall adhere to the manufacturer's recommendation.
Two post installations can be used for larger signs.

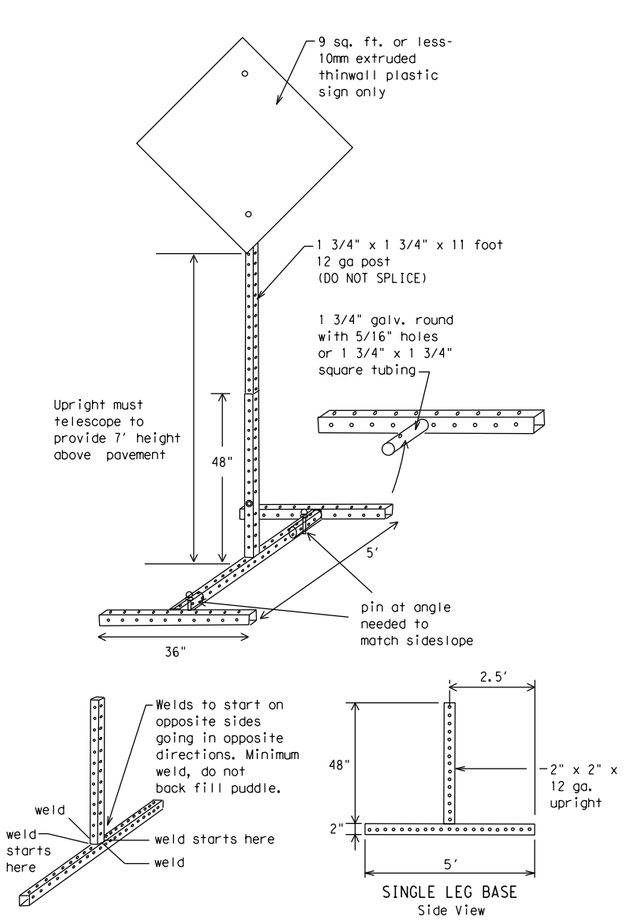

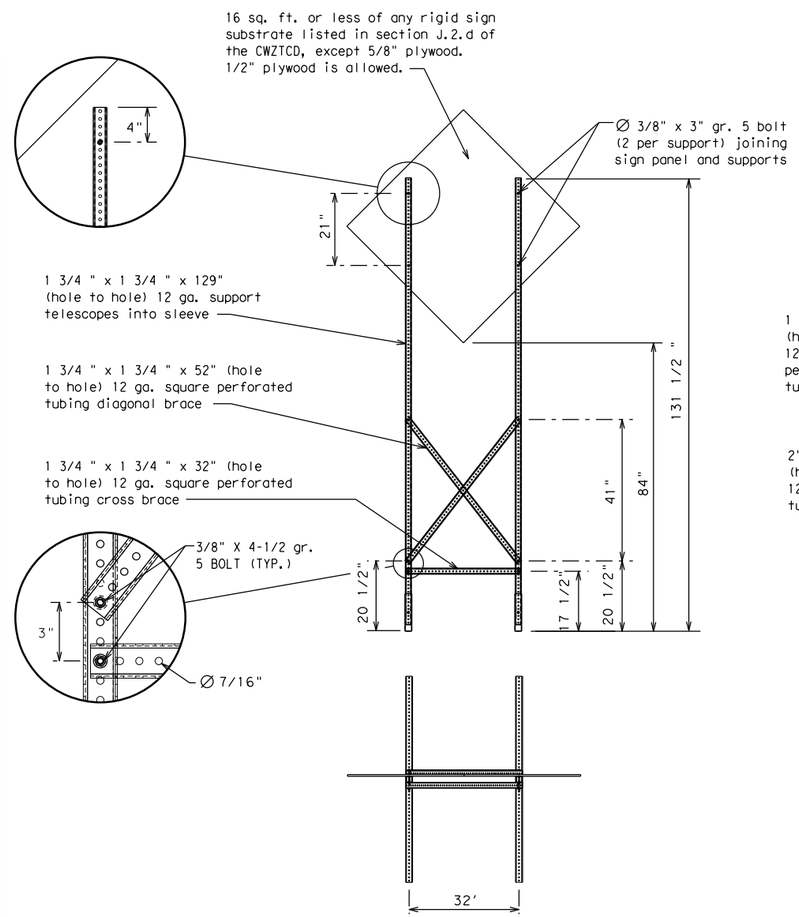

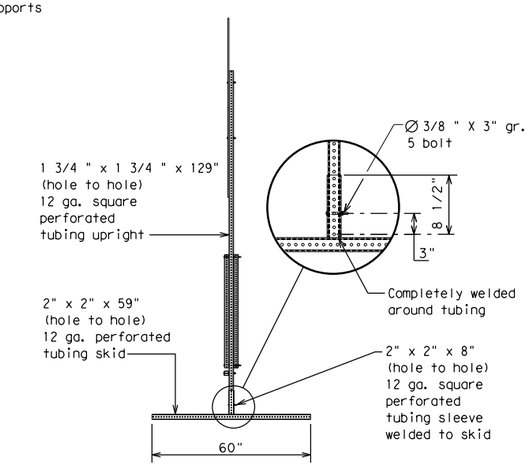

SKID MOUNTED PERFORATED SQUARE STEEL TUBING SIGN SUPPORTS

✳ LONG/INTERMEDIATE TERM STATIONARY - PORTABLE SKID MOUNTED SIGN SUPPORTS

WEDGE ANCHORS

Both steel and plastic Wedge Anchor Systems as shown on the SMD Standard Sheets may be used as temporary sign supports for signs up to 10 square feet of sign face. They may be set in concrete or in sturdy soils if approved by the Engineer. (See web address for "Traffic Engineering Standard Sheets" on BC(1)).

OTHER DESIGNS

MORE DETAILS OF APPROVED LONG/INTERMEDIATE AND SHORT TERM SUPPORTS CAN BE FOUND ON THE CWZTCD LIST. SEE BC(1) FOR WEBSITE LOCATION.

GENERAL NOTES

1. Nails may be used in the assembly of wooden sign supports, but 3/8" bolts with nuts or 3/8" x 3 1/2" lag screws must be used on every joint for final connection.
2. No more than 2 sign posts shall be placed within a 7 ft. circle, except for specific materials noted on the CWZTCD List.
3. When project is completed, all sign supports and foundations shall be removed from the project site. This will be considered subsidiary to Item 502.

✳ See BC(4) for definition of "Work Duration."

✳✳ Wood sign posts MUST be one piece. Splicing will NOT be allowed. Posts shall be painted white.

☐ See the CWZTCD for the type of sign substrate that can be used for each approved sign support.

Texas Department of Transportation — Traffic Safety Division Standard

BARRICADE AND CONSTRUCTION TYPICAL SIGN SUPPORT

BC(5)-21

FILE: bc-21.dgn	DN: TxDOT	CK: TxDOT	DW: TxDOT	CK: TxDOT
© TxDOT November 2002	CONT	SECT	JOB	HIGHWAY
REVISIONS	3544	04		SH0211
9-07 8-14	DIST		COUNTY	SHEET NO.
7-13 5-21	SAT		BEXAR	32

DATE: 12/6/2022 5:50:16 PM
FILE: P:\89446\24\Design\Transpo\Standards\bc-21.dgn

WHEN NOT IN USE, REMOVE THE PCMS FROM THE RIGHT-OF-WAY OR PLACE THE PCMS BEHIND BARRIER OR GUARDRAIL WITH SIGN PANEL TURNED PARALLEL TO TRAFFIC

PORTABLE CHANGEABLE MESSAGE SIGNS

1. The Engineer/Inspector shall approve all messages used on portable changeable message signs (PCMS).
2. Messages on PCMS should contain no more than 8 words (about four to eight characters per word), not including simple words such as "TO," "FOR," "AT," etc.
3. Messages should consist of a single phase, or two phases that alternate. Three-phase messages are not allowed. Each phase of the message should convey a single thought, and must be understood by itself.
4. Use the word "EXIT" to refer to an exit ramp on a freeway; i.e., "EXIT CLOSED." Do not use the term "RAMP."
5. Always use the route or interstate designation (IH, US, SH, FM) along with the number when referring to a roadway.
6. When in use, the bottom of a stationary PCMS message panel should be a minimum 7 feet above the roadway, where possible.
7. The message term "WEEKEND" should be used only if the work is to start on Saturday morning and end by Sunday evening at midnight. Actual days and hours of work should be displayed on the PCMS if work is to begin on Friday evening and/or continue into Monday morning.
8. The Engineer/Inspector may select one of two options which are available for displaying a two-phase message on a PCMS. Each phase may be displayed for either four seconds each or for three seconds each.
9. Do not "flash" messages or words included in a message. The message should be steady burn or continuous while displayed.
10. Do not present redundant information on a two-phase message; i.e., keeping two lines of the message the same and changing the third line.
11. Do not use the word "Danger" in message.
12. Do not display the message "LANES SHIFT LEFT" or "LANES SHIFT RIGHT" on a PCMS. Drivers do not understand the message.
13. Do not display messages that scroll horizontally or vertically across the face of the sign.
14. The following table lists abbreviated words and two-word phrases that are acceptable for use on a PCMS. Both words in a phrase must be displayed together. Words or phrases not on this list should not be abbreviated, unless shown in the TMUTCD.
15. PCMS character height should be at least 18 inches for trailer mounted units. They should be visible from at least 1/2 (.5) mile and the text should be legible from at least 600 feet at night and 800 feet in daylight. Truck mounted units must have a character height of 10 inches and must be legible from at least 400 feet.
16. Each line of text should be centered on the message board rather than left or right justified.
17. If disabled, the PCMS should default to an illegible display that will not alarm motorists and will only be used to alert workers that the PCMS has malfunctioned. A pattern such as a series of horizontal solid bars is appropriate.

WORD OR PHRASE	ABBREVIATION
Access Road	ACCS RD
Alternate	ALT
Avenue	AVE
Best Route	BEST RTE
Boulevard	BLVD
Bridge	BRDG
Cannot	CANT
Center	CTR
Construction Ahead	CONST AHD
CROSSING	XING
Detour Route	DETOUR RTE
Do Not	DONT
East	E
Eastbound	(route) E
Emergency	EMER
Emergency Vehicle	EMER VEH
Entrance, Enter	ENT
Express Lane	EXP LN
Expressway	EXPWY
XXXX Feet	XXXX FT
Fog Ahead	FOG AHD
Freeway	FRWY, FWY
Freeway Blocked	FWY BLKD
Friday	FRI
Hazardous Driving	HAZ DRIVING
Hazardous Material	HAZMAT
High-Occupancy	HOV
Vehicle Highway	HWY
Hour(s)	HR, HRS
Information	INFO
It Is	ITS
Junction	JCT
Left	LFT
Left Lane	LFT LN
Lane Closed	LN CLOSED
Lower Level	LWR LEVEL
Maintenance	MAINT

WORD OR PHRASE	ABBREVIATION
Major	MAJ
Miles	MI
Miles Per Hour	MPH
Minor	MNR
Monday	MON
Normal	NORM
North	N
Northbound	(route) N
Parking	PKING
Road	RD
Right Lane	RT LN
Saturday	SAT
Service Road	SERV RD
Shoulder	SHLDR
Slippery	SLIP
South	S
Southbound	(route) S
Speed	SPD
Street	ST
Sunday	SUN
Telephone	PHONE
Temporary	TEMP
Thursday	THURS
To Downtown	TO DWNTN
Traffic	TRAF
Travelers	TRVLRS
Tuesday	TUES
Time Minutes	TIME MIN
Upper Level	UPR LEVEL
Vehicles (s)	VEH, VEHS
Warning	WARN
Wednesday	WED
Weight Limit	WT LIMIT
West	W
Westbound	(route) W
Wet Pavement	WET PVMT
Will Not	WONT

Roadway designation # IH-number, US-number, SH-number, FM-number

RECOMMENDED PHASES AND FORMATS FOR PCMS MESSAGES DURING ROADWORK ACTIVITIES

(The Engineer may approve other messages not specifically covered here.)

Phase 1: Condition Lists

Road/Lane/Ramp Closure List

FREEWAY CLOSED X MILE	FRONTAGE ROAD CLOSED
ROAD CLOSED AT SH XXX	SHOULDER CLOSED XXX FT
ROAD CLSD AT FM XXXX	RIGHT LN CLOSED XXX FT
RIGHT X LANES CLOSED	RIGHT X LANES OPEN
CENTER LANE CLOSED	DAYTIME LANE CLOSURES
NIGHT LANE CLOSURES	I-XX SOUTH EXIT CLOSED
VARIOUS LANES CLOSED	EXIT XXX CLOSED X MILE
EXIT CLOSED	RIGHT LN TO BE CLOSED
MALL DRIVEWAY CLOSED	X LANES CLOSED TUE - FRI
XXXXXXXX BLVD CLOSED	

Other Condition List

ROADWORK XXX FT	ROAD REPAIRS XXXX FT
FLAGGER XXXX FT	LANE NARROWS XXXX FT
RIGHT LN NARROWS XXXX FT	TWO-WAY TRAFFIC XX MILE
MERGING TRAFFIC XXXX FT	CONST TRAFFIC XXX FT
LOOSE GRAVEL XXXX FT	UNEVEN LANES XXXX FT
DETOUR X MILE	ROUGH ROAD XXXX FT
ROADWORK PAST SH XXXX	ROADWORK NEXT FRI-SUN
BUMP XXXX FT	US XXX EXIT X MILES
TRAFFIC SIGNAL XXXX FT	LANES SHIFT *

* LANES SHIFT in Phase 1 must be used with STAY IN LANE in Phase 2.

Phase 2: Possible Component Lists

Action to Take/Effect on Travel List

MERGE RIGHT	FORM X LINES RIGHT
DETOUR NEXT X EXITS	USE XXXXX RD EXIT
USE EXIT XXX	USE EXIT I-XX NORTH
STAY ON US XXX SOUTH	USE I-XX E TO I-XX N
TRUCKS USE US XXX N	WATCH FOR TRUCKS
WATCH FOR TRUCKS	EXPECT DELAYS
EXPECT DELAYS	PREPARE TO STOP
REDUCE SPEED XXX FT	END SHOULDER USE
USE OTHER ROUTES	WATCH FOR WORKERS
STAY IN LANE *	

Location List

AT FM XXXX
BEFORE RAILROAD CROSSING
NEXT X MILES
PAST US XXX EXIT
XXXXXXX TO XXXXXXX
US XXX TO FM XXXX

Warning List

SPEED LIMIT XX MPH
MAXIMUM SPEED XX MPH
MINIMUM SPEED XX MPH
ADVISORY SPEED XX MPH
RIGHT LANE EXIT
USE CAUTION
DRIVE SAFELY
DRIVE WITH CARE

** Advance Notice List

TUE-FRI XX AM- X PM
APR XX-33 X PM-X AM
BEGINS MONDAY
BEGINS MAY XX
MAY X-X XX PM - XX AM
NEXT FRI-SUN
XX AM TO XX PM
NEXT TUE AUG XX
TONIGHT XX PM- XX AM

** See Application Guidelines Note 6.

APPLICATION GUIDELINES

1. Only 1 or 2 phases are to be used on a PCMS.
2. The 1st phase (or both) should be selected from the "Road/Lane/Ramp Closure List" and the "Other Condition List".
3. A 2nd phase can be selected from the "Action to Take/Effect on Travel, Location, General Warning, or Advance Notice Phase Lists".
4. A Location Phase is necessary only if a distance or location is not included in the first phase selected.
5. If two PCMS are used in sequence, they must be separated by a minimum of 1000 ft. Each PCMS shall be limited to two phases, and should be understandable by themselves.
6. For advance notice, when the current date is within seven days of the actual work date, calendar days should be replaced with days of the week. Advance notification should typically be for no more than one week prior to the work.

WORDING ALTERNATIVES

1. The words RIGHT, LEFT and ALL can be interchanged as appropriate.
2. Roadway designations IH, US, SH, FM and LP can be interchanged as appropriate.
3. EAST, WEST, NORTH and SOUTH (or abbreviations E, W, N and S) can be interchanged as appropriate.
4. Highway names and numbers replaced as appropriate.
5. ROAD, HIGHWAY and FREEWAY can be interchanged as needed.
6. AHEAD may be used instead of distances if necessary.
7. FT and MI, MILE and MILES interchanged as appropriate.
8. AT, BEFORE and PAST interchanged as needed.
9. Distances or AHEAD can be eliminated from the message if a location phase is used.

PCMS SIGNS WITHIN THE R.O.W. SHALL BE BEHIND GUARDRAIL OR CONCRETE BARRIER OR SHALL HAVE A MINIMUM OF FOUR (4) PLASTIC DRUMS PLACED PERPENDICULAR TO TRAFFIC ON THE UPSTREAM SIDE OF THE PCMS, WHEN EXPOSED TO ONE DIRECTION OF TRAFFIC. WHEN EXPOSED TO TWO WAY TRAFFIC, THE FOUR DRUMS SHOULD BE PLACED WITH ONE DRUM AT EACH OF THE FOUR CORNERS OF THE UNIT.

FULL MATRIX PCMS SIGNS

1. When Full Matrix PCMS signs are used, the character height and legibility/visibility requirements shall be maintained as listed in Note 15 under "PORTABLE CHANGEABLE MESSAGE SIGNS" above.
2. When symbol signs, such as the "Flagger Symbol"(CW20-7) are represented graphically on the Full Matrix PCMS sign and, with the approval of the Engineer, it shall maintain the legibility/visibility requirement listed above.
3. When symbol signs are represented graphically on the Full Matrix PCMS, they shall only supplement the use of the static sign represented, and shall not substitute for, or replace that sign.
4. A full matrix PCMS may be used to simulate a flashing arrow board provided it meets the visibility, flash rate and dimming requirements on BC(7), for the same size arrow.

DISCLAIMER:
The use of this standard is governed by the "Texas Engineering Practice Act". No warranty of any kind is made by TxDOT for any purpose whatsoever. TxDOT assumes no responsibility for the conversion of this standard to other formats or for incorrect results or damages resulting from its use.

DATE: 12/6/2022 5:50:16 PM
FILE: P:\89146\24\Design\Transpo\Standards\bc-21.dgn

Texas Department of Transportation — Traffic Safety Division Standard

BARRICADE AND CONSTRUCTION PORTABLE CHANGEABLE MESSAGE SIGN (PCMS)

BC(6)-21

FILE: bc-21.dgn	DN: TxDOT	CK: TxDOT	DW: TxDOT	CK: TxDOT
© TxDOT November 2002	CONT	SECT	JOB	HIGHWAY
REVISIONS	3544	04		SH0211
9-07 8-14	DIST		COUNTY	SHEET NO.
7-13 5-21	SAT		BEXAR	33

DISCLAIMER:
The use of this standard is governed by the "Texas Engineering Practice Act". No warranty of any kind is made by TxDOT for any purpose whatsoever. TxDOT assumes no responsibility for the conversion of this standard to other formats or for incorrect results or damages resulting from its use.

1. Barrier Reflectors shall be pre-qualified, and conform to the color and reflectivity requirements of DMS-8600. A list of prequalified Barrier Reflectors can be found at the Material Producer List web address shown on BC(1).
2. Color of Barrier Reflectors shall be as specified in the TMUTCD. The cost of the reflectors shall be considered subsidiary to Item 512.

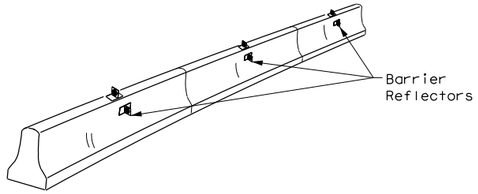

CONCRETE TRAFFIC BARRIER (CTB)

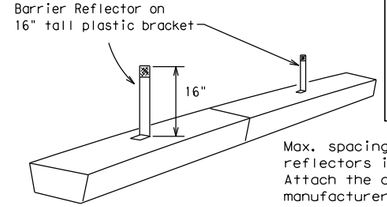

Max. spacing of barrier reflectors is 20 feet. Attach the delineators as per manufacturer's recommendations.

LOW PROFILE CONCRETE BARRIER (LPCB)

LOW PROFILE CONCRETE BARRIER (LPCB) USED IN WORK ZONES

LPCB is approved for use in work zone locations, where the posted speed is 45mph, or less. See Roadway Standard Sheet LPCB.

3. Where traffic is on one side of the CTB, two (2) Barrier Reflectors shall be mounted in approximately the midsection of each section of CTB. An alternate mounting location is uniformly spaced at one end of each CTB. This will allow for attachment of a barrier grapple without damaging the reflector. The Barrier Reflector mounted on the side of the CTB shall be located directly below the reflector mounted on top of the barrier, as shown in the detail above.
4. Where CTB separates two-way traffic, three barrier reflectors shall be mounted on each section of CTB. The reflector unit on top shall have two yellow reflective faces (Bi-Directional)while the reflectors on each side of the barrier shall have one yellow reflective face, as shown in the detail above.
5. When CTB separates traffic traveling in the same direction, no barrier reflectors will be required on top of the CTB.
6. Barrier Reflector units shall be yellow or white in color to match the edgeline being supplemented.
7. Maximum spacing of Barrier Reflectors is forty (40) feet.
8. Pavement markers or temporary flexible-reflective roadway marker tabs shall NOT be used as CTB delineation.
9. Attachment of Barrier Reflectors to CTB shall be per manufacturer's recommendations.
10. Missing or damaged Barrier Reflectors shall be replaced as directed by the Engineer.
11. Single slope barriers shall be delineated as shown on the above detail.

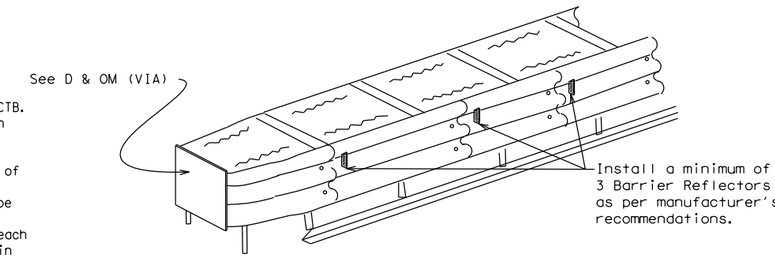

DELINEATION OF END TREATMENTS

END TREATMENTS FOR CTB'S USED IN WORK ZONES

End treatments used on CTB's in work zones shall meet the apppropriate crashworthy standards as defined in the Manual for Assessing Safety Hardware (MASH). Refer to the CWZTCD List for approved end treatments and manufacturers.

BARRIER REFLECTORS FOR CONCRETE TRAFFIC BARRIER AND ATTENUATORS

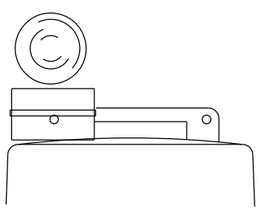

Type C Warning Light or approved substitute mounted on a drum adjacent to the travel way.

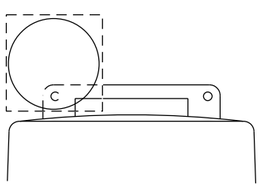

Warning reflector may be round or square.Must have a yellow reflective surface area of at least 30 square inches

WARNING LIGHTS

1. Warning lights shall meet the requirements of the TMUTCD.
2. Warning lights shall NOT be installed on barricades.
3. Type A-Low Intensity Flashing Warning Lights are commonly used with drums. They are intended to warn of or mark a potentially hazardous area. Their use shall be as indicated on this sheet and/or other sheets of the plans by the designation "FL". The Type A Warning Lights shall not be used with signs manufactured with Type B_{FL} or C_{FL} Sheeting meeting the requirements of Departmental Material Specification DMS-8300.
4. Type-C and Type D 360 degree Steady Burn Lights are intended to be used in a series for delineation to supplement other traffic control devices. Their use shall be as indicated on this sheet and/or other sheets of the plans by the designation "SB".
5. The Engineer/Inspector or the plans shall specify the location and type of warning lights to be installed on the traffic control devices.
6. When required by the Engineer, the Contractor shall furnish a copy of the warning lights certification. The warning light manufacturer will certify the warning lights meet the requirements of the latest ITE Purchase Specifications for Flashing and Steady-Burn Warning Lights.
7. When used to delineate curves, Type-C and Type D Steady Burn Lights should only be placed on the outside of the curve, not the inside.
8. The location of warning lights and warning reflectors on drums shall be as shown elsewhere in the plans.

WARNING LIGHTS MOUNTED ON PLASTIC DRUMS

1. Type A flashing warning lights are intended to warn drivers that they are approaching or are in a potentially hazardous area.
2. Type A random flashing warning lights are not intended for delineation and shall not be used in a series.
3. A series of sequential flashing warning lights placed on channelizing devices to form a merging taper may be used for delineation. If used, the successive flashing of the sequential warning lights should occur from the beginning of the taper to the end of the merging taper in order to identify the desired vehicle path. The rate of flashing for each light shall be 65 flashes per minute, plus or minus 10 flashes.
4. Type C and D steady-burn warning lights are intended to be used in a series to delineate the edge of the travel lane on detours, on lane changes, on lane closures, and on other similar conditions.
5. Type A, Type C and Type D warning lights shall be installed at locations as detailed on other sheets in the plans.
6. Warning lights shall not be installed on a drum that has a sign, chevron or vertical panel.
7. The maximum spacing for warning lights on drums should be identical to the channelizing device spacing.

WARNING REFLECTORS MOUNTED ON PLASTIC DRUMS AS A SUBSTITUTE FOR TYPE C (STEADY BURN) WARNING LIGHTS

1. A warning reflector or approved substitute may be mounted on a plastic drum as a substitute for a Type C, steady burn warning light at the discretion of the Contractor unless otherwise noted in the plans.
2. The warning reflector shall be yellow in color and shall be manufactured using a sign substrate approved for use with plastic drums listed on the CWZTCD.
3. The warning reflector shall have a minimum retroreflective surface area (one-side) of 30 square inches.
4. Round reflectors shall be fully reflectorized, including the area where attached to the drum.
5. Square substrates must have a minimum of 30 square inches of reflectorized sheeting. They do not have to be reflectorized where it attaches to the drum.
6. The side of the warning reflector facing approaching traffic shall have sheeting meeting the color and retroreflectivity requirements for DMS 8300-Type B or Type C.
7. When used near two-way traffic, both sides of the warning reflector shall be reflectorized.
8. The warning reflector should be mounted on the side of the handle nearest approaching traffic.
9. The maximum spacing for warning reflectors should be identical to the channelizing device spacing requirements.

Arrow Boards may be located behind channelizing devices in place for a shoulder taper or merging taper, otherwise they shall be delineated with four (4) channelizing devices placed perpendicular to traffic on the upstream side of traffic.

1. The Flashing Arrow Board should be used for all lane closures on multi-lane roadways, or slow moving maintenance or construction activities on the travel lanes.
2. Flashing Arrow Boards should not be used on two-lane, two-way roadways, detours, diversions or work on shoulders unless the "CAUTION" display (see detail below) is used.
3. The Engineer/Inspector shall choose all appropriate signs, barricades and/or other traffic control devices that should be used in conjunction with the Flashing Arrow Board.
4. The Flashing Arrow Board should be able to display the following symbols:

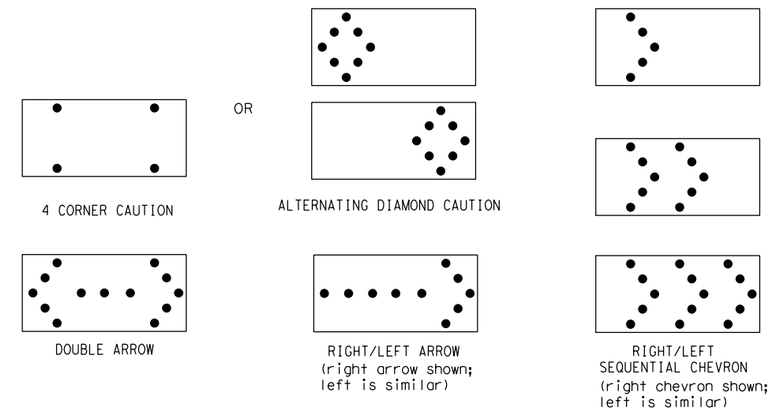

5. The "CAUTION" display consists of four corner lamps flashing simultaneously, or the Alternating Diamond Caution mode as shown.
6. The straight line caution display is NOT ALLOWED.
7. The Flashing Arrow Board shall be capable of minimum 50 percent dimming from rated lamp voltage. The flashing rate of the lamps shall not be less than 25 nor more than 40 flashes per minute.
8. Minimum lamp "on time" shall be approximately 50 percent for the flashing arrow and equal intervals of 25 percent for each sequential phase of the flashing chevron.
9. The sequential arrow display is NOT ALLOWED.
10. The flashing arrow display is the TxDOT standard; however, the sequential chevron display may be used during daylight operations.
11. The Flashing Arrow Board shall be mounted on a vehicle, trailer or other suitable support.
12. A Flashing Arrow Board SHALL NOT BE USED to laterally shift traffic.
13. A full matrix PCMS may be used to simulate a Flashing Arrow Board provided it meets visibility, flash rate and dimming requirements on this sheet for the same size arrow.
14. Minimum mounting height of trailer mounted Arrow Boards should be 7 feet from roadway to bottom of panel.

REQUIREMENTS			
TYPE	MINIMUM SIZE	MINIMUM NUMBER OF PANEL LAMPS	MINIMUM VISIBILITY DISTANCE
B	30 x 60	13	3/4 mile
C	48 x 96	15	1 mile

ATTENTION

Flashing Arrow Boards shall be equipped with automatic dimming devices.

WHEN NOT IN USE, REMOVE THE ARROW BOARD FROM THE RIGHT-OF-WAY OR PLACE THE ARROW BOARD BEHIND CONCRETE TRAFFIC BARRIER OR GUARDRAIL.

FLASHING ARROW BOARDS

TRUCK-MOUNTED ATTENUATORS

1. Truck-mounted attenuators (TMA) used on TxDOT facilities must meet the requirements outlined in the Manual for Assessing Safety Hardware (MASH).
2. Refer to the CWZTCD for the requirements of Level 2 or Level 3 TMAs.
3. Refer to the CWZTCD for a list of approved TMAs.
4. TMAs are required on freeways unless otherwise noted in the plans.
5. A TMA should be used anytime that it can be positioned 30 to 100 feet in advance of the area of crew exposure without adversely affecting the work performance.
6. The only reason a TMA should not be required is when a work area is spread down the roadway and the work crew is an extended distance from the TMA.

Texas Department of Transportation — Traffic Safety Division Standard

BARRICADE AND CONSTRUCTION ARROW PANEL, REFLECTORS, WARNING LIGHTS & ATTENUATOR

BC(7)-21

FILE: bc-21.dgn	DN: TxDOT	CK: TxDOT	DW: TxDOT	CK: TxDOT
© TxDOT November 2002	CONT	SECT	JOB	HIGHWAY
REVISIONS	3544	04		SH0211
9-07 8-14	DIST		COUNTY	SHEET NO.
7-13 5-21	SAT		BEXAR	34

101

DATE: 12/6/2022 5:50:17 PM
FILE: P:\89\46\24\Design\Transpo\Standards\bc-21.dgn

DISCLAIMER:
The use of this standard is governed by the "Texas Engineering Practice Act". No warranty of any kind is made by TxDOT for any purpose whatsoever. TxDOT assumes no responsibility for the conversion of this standard to other formats or for incorrect results or damages resulting from its use.

GENERAL NOTES

1. For long term stationary work zones on freeways, drums shall be used as the primary channelizing device.
2. For intermediate term stationary work zones on freeways, drums should be used as the primary channelizing device but may be replaced in tangent sections by vertical panels, or 42" two-piece cones. In tangent sections, one-piece cones may be used with the approval of the Engineer but only if personnel are present on the project at all times to maintain the cones in proper position and location.
3. For short term stationary work zones on freeways, drums are the preferred channelizing device but may be replaced in tapers, transitions and tangent sections by vertical panels, two-piece cones or one-piece cones as approved by the Engineer.
4. Drums and all related items shall comply with the requirements of the current version of the "Texas Manual on Uniform Traffic Control Devices" (TMUTCD) and the "Compliant Work Zone Traffic Control Devices List" (CWZTCD).
5. Drums, bases, and related materials shall exhibit good workmanship and shall be free from objectionable marks or defects that would adversely affect their appearance or serviceability.
6. The Contractor shall have a maximum of 24 hours to replace any plastic drums identified for replacement by the Engineer/Inspector. The replacement device must be an approved device.

GENERAL DESIGN REQUIREMENTS

Pre-qualified plastic drums shall meet the following requirements:

1. Plastic drums shall be a two-piece design; the "body" of the drum shall be the top portion and the "base" shall be the bottom.
2. The body and base shall lock together in such a manner that the body separates from the base when impacted by a vehicle traveling at a speed of 20 MPH or greater but prevents accidental separation due to normal handling and/or air turbulence created by passing vehicles.
3. Plastic drums shall be constructed of lightweight flexible, and deformable materials. The Contractor shall NOT use metal drums or single piece plastic drums as channelization devices or sign supports.
4. Drums shall present a profile that is a minimum of 18 inches in width at the 36 inch height when viewed from any direction. The height of drum unit (body installed on base) shall be a minimum of 36 inches and a maximum of 42 inches.
5. The top of the drum shall have a built-in handle for easy pickup and shall be designed to drain water and not collect debris. The handle shall have a minimum of two widely spaced 9/16 inch diameter holes to allow attachment of a warning light, warning reflector unit or approved compliant sign.
6. The exterior of the drum body shall have a minimum of four alternating orange and white retroreflective circumferential stripes not less than 4 inches nor greater than 8 inches in width. Any non-reflectorized space between any two adjacent stripes shall not exceed 2 inches in width.
7. Bases shall have a maximum width of 36 inches, a maximum height of 4 inches, and a minimum of two footholds of sufficient size to allow base to be held down while separating the drum body from the base.
8. Plastic drums shall be constructed of ultra-violet stabilized, orange, high-density polyethylene (HDPE) or other approved material.
9. Drum body shall have a maximum unballasted weight of 11 lbs.
10. Drum and base shall be marked with manufacturer's name and model number.

RETROREFLECTIVE SHEETING

1. The stripes used on drums shall be constructed of sheeting meeting the color and retroreflectivity requirements of Departmental Materials Specification DMS-8300, "Sign Face Materials." Type A or Type B reflective sheeting shall be supplied unless otherwise specified in the plans.
2. The sheeting shall be suitable for use on and shall adhere to the drum surface such that, upon vehicular impact, the sheeting shall remain adhered in-place and exhibit no delaminating, cracking, or loss of retroreflectivity other than that loss due to abrasion of the sheeting surface.

BALLAST

1. Unballasted bases shall be large enough to hold up to 50 lbs. of sand. This base, when filled with the ballast material, should weigh between 35 lbs (minimum) and 50 lbs (maximum). The ballast may be sand in one to three sandbags separate from the base, sand in a sand-filled plastic base, or other ballasting devices as approved by the Engineer. Stacking of sandbags will be allowed, however height of sandbags above pavement surface may not exceed 12 inches.
2. Bases with built-in ballast shall weigh between 40 lbs. and 50 lbs. Built-in ballast can be constructed of an integral crumb rubber base or a solid rubber base.
3. Recycled truck tire sidewalls may be used for ballast on drums approved for this type of ballast on the CWZTCD list.
4. The ballast shall not be heavy objects, water, or any material that would become hazardous to motorists, pedestrians, or workers when the drum is struck by a vehicle.
5. When used in regions susceptible to freezing, drums shall have drainage holes in the bottoms so that water will not collect and freeze becoming a hazard when struck by a vehicle.
6. Ballast shall not be placed on top of drums.
7. Adhesives may be used to secure base of drums to pavement.

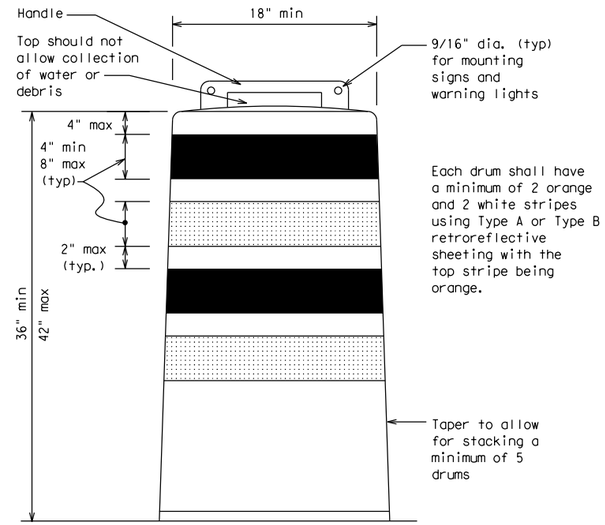

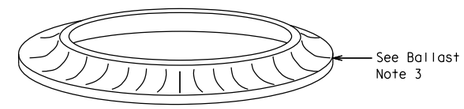

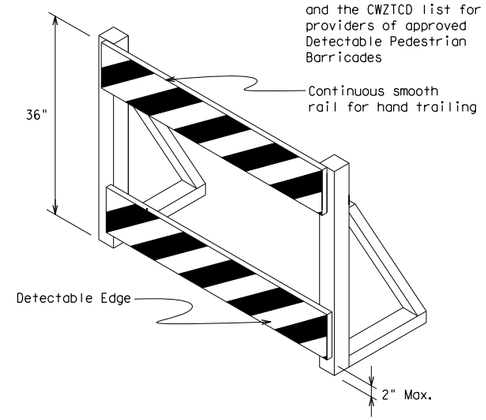

DETECTABLE PEDESTRIAN BARRICADES

1. When existing pedestrian facilities are disrupted, closed, or relocated in a TTC zone, the temporary facilities shall be detectable and include accessibility features consistent with the features present in the existing pedestrian facility. Refer to WZ(BTS-2) for Pedestrian Control requirements for Sidewalk Diversions, Sidewalk Detours and Crosswalk Closures.
2. Where pedestrians with visual disabilities normally use the closed sidewalk, a Detectable Pedestrian Barricade shall be placed across the full width of the closed sidewalk instead of a Type 3 Barricade.
3. Detectable pedestrian barricades similar to the one pictured above, longitudinal channelizing devices, some concrete barriers, and wood or chain link fencing with a continuous detectable edging can satisfactorily delineate a pedestrian path.
4. Tape, rope, or plastic chain strung between devices are not detectable, do not comply with the design standards in the "Americans with Disabilities Act Accessibility Guidelines (ADAAG)" and should not be used as a control for pedestrian movements.
5. Warning lights shall not be attached to detectable pedestrian barricades.
6. Detectable pedestrian barricades should use 8" nominal barricade rails as shown on BC(10) provided that the top rail provides a smooth continuous rail suitable for hand trailing with no splinters, burrs, or sharp edges.

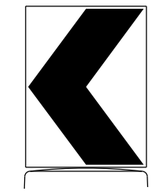

18" x 24" Sign
(Maximum Sign Dimension)
Chevron CW1-8, Opposing Traffic Lane Divider, Driveway sign D70a, Keep Right R4 series or other signs as approved by Engineer

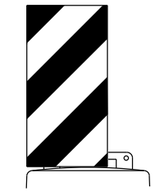

12" x 24"
Vertical Panel
mount with diagonals sloping down towards travel way

Plywood, Aluminum or Metal sign substrates shall NOT be used on plastic drums

SIGNS, CHEVRONS, AND VERTICAL PANELS MOUNTED ON PLASTIC DRUMS

1. Signs used on plastic drums shall be manufactured using substrates listed on the CWZTCD.
2. Chevrons and other work zone signs with an orange background shall be manufactured with Type B_{FL} or Type C_{FL} Orange sheeting meeting the color and retroreflectivity requirements of DMS-8300, "Sign Face Material," unless otherwise specified in the plans.
3. Vertical Panels shall be manufactured with orange and white sheeting meeting the requirements of DMS-8300 Type A or Type B. Diagonal stripes on Vertical Panels shall slope down toward the intended traveled lane.
4. Other sign messages (text or symbolic) may be used as approved by the Engineer. Sign dimensions shall not exceed 18 inches in width or 24 inches in height, except for the R9 series signs discussed in note 8 below.
5. Signs shall be installed using a 1/2 inch bolt (nominal) and nut, two washers, and one locking washer for each connection.
6. Mounting bolts and nuts shall be fully engaged and adequately torqued. Bolts should not extend more than 1/2 inch beyond nuts.
7. Chevrons may be placed on drums on the outside of curves, on merging tapers or on shifting tapers. When used in these locations, they may be placed on every drum or spaced not more than on every third drum. A minimum of three (3) should be used at each location called for in the plans.
8. R9-9, R9-10, R9-11 and R9-11a Sidewalk Closed signs which are 24 inches wide may be mounted on plastic drums, with approval of the Engineer.

Texas Department of Transportation

Traffic Safety Division Standard

BARRICADE AND CONSTRUCTION CHANNELIZING DEVICES

BC(8)-21

FILE: bc-21.dgn	DN: TxDOT	CK: TxDOT	DW: TxDOT	CK: TxDOT
©TxDOT November 2002	CONT	SECT	JOB	HIGHWAY
REVISIONS	3544	04		SH0211
4-03 8-14	DIST		COUNTY	SHEET NO.
9-07 5-21	SAT		BEXAR	35
7-13				

DATE: 12/6/2022 5:50:17 PM
FILE: P:\89\46\24\Design\Transpo\Standards\bc-21.dgn

DISCLAIMER:
The use of this standard is governed by the "Texas Engineering Practice Act". No warranty of any kind is made by TxDOT for any purpose whatsoever. TxDOT assumes no responsibility for the conversion of this standard to other formats or for incorrect results or damages resulting from its use.

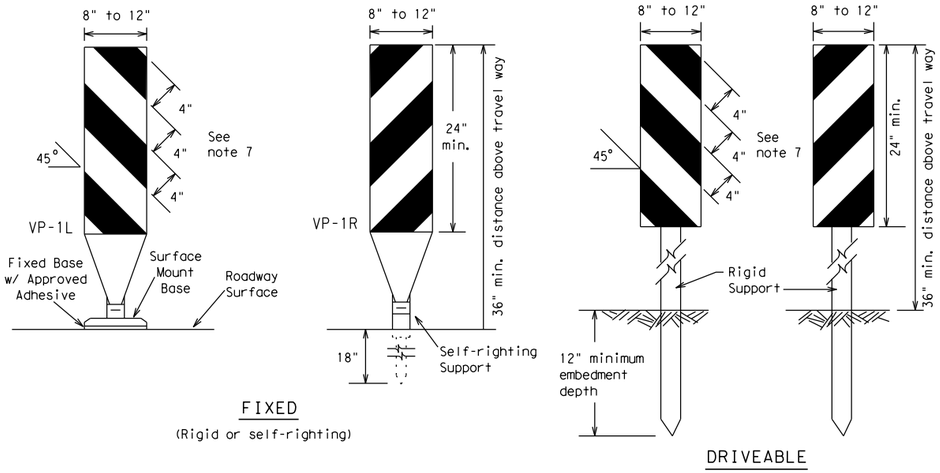

FIXED

(Rigid or self-righting)

DRIVEABLE

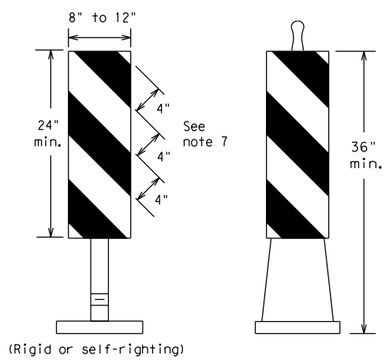

(Rigid or self-righting)

PORTABLE

1. Vertical Panels (VP's) are normally used to channelize traffic or divide opposing lanes of traffic.
2. VP's may be used in daytime or nighttime situations. They may be used at the edge of shoulder drop-offs and other areas such as lane transitions where positive daytime and nighttime delineation is required. The Engineer/Inspector shall refer to the Roadway Design Manual for additional requirements on the use VP's for drop-offs.
3. VP's should be mounted back to back if used at the edge of cuts adjacent to two-way two lane roadways. Stripes are to be reflective orange and reflective white and should always slope downward toward the travel lane.
4. VP's used on expressways and freeways or other high speed roadways, may have more than 270 square inches of retroreflective area facing traffic.
5. Self-righting supports are available with portable base. See "Compliant Work Zone Traffic Control Devices List" (CWZTCD).
6. Sheeting for the VP's shall be retroreflective Type A or Type B conforming to Departmental Material Specification DMS-8300, unless noted otherwise.
7. Where the height of reflective material on the vertical panel is 36 inches or greater, a panel stripe of 6 inches shall be used.

VERTICAL PANELS (VPs)

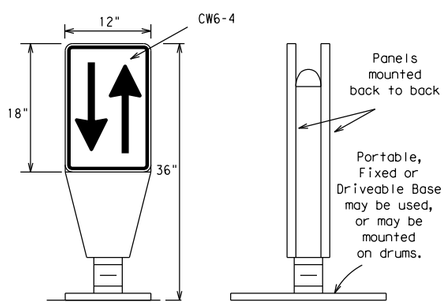

1. Opposing Traffic Lane Dividers (OTLD) are delineation devices designed to convert a normal one-way roadway section to two-way operation. OTLD's are used on temporary centerlines. The upward and downward arrows on the sign's face indicate the direction of traffic on either side of the divider. The base is secured to the pavement with an adhesive or rubber weight to minimize movement caused by a vehicle impact or wind gust.
2. The OTLD may be used in combination with 42" cones or VPs.
3. Spacing between the OTLD shall not exceed 500 feet. 42" cones or VPs placed between the OTLD's should not exceed 100 foot spacing.
4. The OTLD shall be orange with a black non-reflective legend. Sheeting for the OTLD shall be retroreflective Type B_{FL} or Type C_{FL} conforming to Departmental Material Specification DMS-8300, unless noted otherwise. The legend shall meet the requirements of DMS-8300.

OPPOSING TRAFFIC LANE DIVIDERS (OTLD)

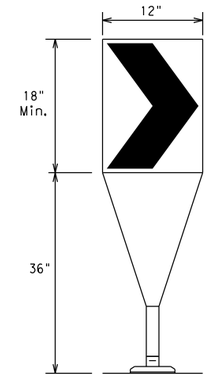

Fixed Base w/ Approved Adhesive (Driveable Base, or Flexible Support can be used)

1. The chevron shall be a vertical rectangle with a minimum size of 12 by 18 inches.
2. Chevrons are intended to give notice of a sharp change of alignment with the direction of travel and provide additional emphasis and guidance for vehicle operators with regard to changes in horizontal alignment of the roadway.
3. Chevrons, when used, shall be erected on the outside of a sharp curve or turn, or on the far side of an intersection. They shall be in line with and at right angles to approaching traffic. Spacing should be such that the motorist always has three in view, until the change in alignment eliminates its need.
4. To be effective, the chevron should be visible for at least 500 feet.
5. Chevrons shall be orange with a black nonreflective legend. Sheeting for the chevron shall be retroreflective Type B_{FL} or Type C_{FL} conforming to Departmental Material Specification DMS-8300, unless noted otherwise. The legend shall meet the requirements of DMS-8300.
6. For Long Term Stationary use on tapers or transitions on freeways and divided highways, self-righting chevrons may be used to supplement plastic drums but not to replace plastic drums.

CHEVRONS

GENERAL NOTES

1. Work Zone channelizing devices illustrated on this sheet may be installed in close proximity to traffic and are suitable for use on high or low speed roadways. The Engineer/Inspector shall ensure that spacing and placement is uniform and in accordance with the "Texas Manual on Uniform Traffic Control Devices" (TMUTCD).
2. Channelizing devices shown on this sheet may have a driveable, fixed or portable base. The requirement for self-righting channelizing devices must be specified in the General Notes or other plan sheets.
3. Channelizing devices on self-righting supports should be used in work zone areas where channelizing devices are frequently impacted by errant vehicles or vehicle related wind gusts making alignment of the channelizing devices difficult to maintain. Locations of these devices shall be detailed elsewhere in the plans. These devices shall conform to the TMUTCD and the "Compliant Work Zone Traffic Control Devices List" (CWZTCD).
4. The Contractor shall maintain devices in a clean condition and replace damaged, nonreflective, faded, or broken devices and bases as required by the Engineer/Inspector. The Contractor shall be required to maintain proper device spacing and alignment.
5. Portable bases shall be fabricated from virgin and/or recycled rubber. The portable bases shall weigh a minimum of 30 lbs.
6. Pavement surfaces shall be prepared in a manner that ensures proper bonding between the adhesives, the fixed mount bases and the pavement surface. Adhesives shall be prepared and applied according to the manufacturer's recommendations.
7. The installation and removal of channelizing devices shall not cause detrimental effects to the final pavement surfaces, including pavement surface discoloration or surface integrity. Driveable bases shall not be permitted on final pavement surfaces. The Engineer/Inspector shall approve all application and removal procedures of fixed bases.

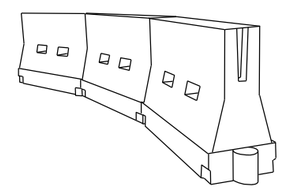

LONGITUDINAL CHANNELIZING DEVICES (LCD)

1. LCDs are crashworthy, lightweight, deformable devices that are highly visible, have good target value and can be connected together. They are not designed to contain or redirect a vehicle on impact.
2. LCDs may be used instead of a line of cones or drums.
3. LCDs shall be placed in accordance to application and installation requirements specific to the device, and used only when shown on the CWZTCD list.
4. LCDs should not be used to provide positive protection for obstacles, pedestrians or workers.
5. LCDs shall be supplemented with retroreflective delineation as required for temporary barriers on BC(7) when placed roughly parallel to the travel lanes.
6. LCDs used as barricades placed perpendicular to traffic should have at least one row of reflective sheeting meeting the requirements for barricade rails as shown on BC(10). Place reflective sheeting near the top of the LCD along the full length of the device.

WATER BALLASTED SYSTEMS USED AS BARRIERS

1. Water ballasted systems used as barriers shall not be used solely to channelize road users, but also to protect the work space per the appropriate Manual for Assessing Safety Hardware (MASH) crashworthiness requirements based on roadway speed and barrier application.
2. Water ballasted systems used to channelize vehicular traffic shall be supplemented with retroreflective delineation or channelizing devices to improve daytime/nighttime visibility. They may also be supplemented with pavement markings.
3. Water ballasted systems used as barriers shall be placed in accordance to application and installation requirements specific to the device, and used only when shown on the CWZTCD list.
4. Water ballasted systems used as barriers should not be used for a merging taper except in low speed (less than 45 MPH) urban areas. When used on a taper in a low speed urban area, the taper shall be delineated and the taper length should be designed to optimize road user operations considering the available geometric conditions.
5. When water ballasted systems used as barriers have blunt ends exposed to traffic, they should be attenuated as per manufacturer recommendations or flared to a point outside the clear zone.

If used to channelize pedestrians, longitudinal channelizing devices or water ballasted systems must have a continuous detectable bottom for users of long canes and the top of the unit shall not be less than 32 inches in height.

HOLLOW OR WATER BALLASTED SYSTEMS USED AS LONGITUDINAL CHANNELIZING DEVICES OR BARRIERS

Posted Speed	Formula	Minimum Desirable Taper Lengths **			Suggested Maximum Spacing of Channelizing Devices	
		10' Offset	11' Offset	12' Offset	On a Taper	On a Tangent
30	$L = \frac{WS^2}{60}$	150'	165'	180'	30'	60'
35		205'	225'	245'	35'	70'
40		265'	295'	320'	40'	80'
45	L = WS	450'	495'	540'	45'	90'
50		500'	550'	600'	50'	100'
55		550'	605'	660'	55'	110'
60		600'	660'	720'	60'	120'
65		650'	715'	780'	65'	130'
70		700'	770'	840'	70'	140'
75		750'	825'	900'	75'	150'
80		800'	880'	960'	80'	160'

** Taper lengths have been rounded off.
L=Length of Taper (FT.) W=Width of Offset (FT.)
S=Posted Speed (MPH)

SUGGESTED MAXIMUM SPACING OF CHANNELIZING DEVICES AND MINIMUM DESIRABLE TAPER LENGTHS

Texas Department of Transportation — Traffic Safety Division Standard

BARRICADE AND CONSTRUCTION CHANNELIZING DEVICES

BC(9)-21

FILE: bc-21.dgn	DN: TxDOT	CK: TxDOT	DW: TxDOT	CK: TxDOT
© TxDOT November 2002	CONT	SECT	JOB	HIGHWAY
REVISIONS	3544	04		SH0211
9-07 8-14	DIST		COUNTY	SHEET NO.
7-13 5-21	SAT		BEXAR	36

DATE: 12/6/2022 5:50:18 PM
FILE: P:\89\46\24\Design\Transpo\Standards\bc-21.dgn

DISCLAIMER:
The use of this standard is governed by the "Texas Engineering Practice Act". No warranty of any kind is made by TxDOT for any purpose whatsoever. TxDOT assumes no responsibility for the conversion of this standard to other formats or for incorrect results or damages resulting from its use.

TYPE 3 BARRICADES

1. Refer to the Compliant Work Zone Traffic Control Devices List (CWZTCD) for details of the Type 3 Barricades and a list of all materials used in the construction of Type 3 Barricades.
2. Type 3 Barricades shall be used at each end of construction projects closed to all traffic.
3. Barricades extending across a roadway should have stripes that slope downward in the direction toward which traffic must turn in detouring. When both right and left turns are provided, the chevron striping may slope downward in both directions from the center of the barricade. Where no turns are provided at a closed road, striping should slope downward in both directions toward the center of roadway.
4. Striping of rails, for the right side of the roadway, should slope downward to the left. For the left side of the roadway, striping should slope downward to the right.
5. Identification markings may be shown only on the back of the barricade rails. The maximum height of letters and/or company logos used for identification shall be 1".
6. Barricades shall not be placed parallel to traffic unless an adequate clear zone is provided.
7. Warning lights shall NOT be installed on barricades.
8. Where barricades require the use of weights to keep from turning over, the use of sandbags with dry, cohesionless sand is recommended. The sandbags will be tied shut to keep the sand from spilling and to maintain a constant weight. Sand bags shall not be stacked in a manner that covers any portion of a barricade rails reflective sheeting. Rock, concrete, iron, steel or other solid objects will NOT be permitted. Sandbags should weigh a minimum of 35 lbs and a maximum of 50 lbs. Sandbags shall be made of a durable material that tears upon vehicular impact. Rubber (such as tire inner tubes) shall not be used for sandbags. Sandbags shall only be placed along or upon the base supports of the device and shall not be suspended above ground level or hung with rope, wire, chains or other fasteners.
9. Sheeting for barricades shall be retroreflective Type A or Type B conforming to Departmental Material Specification DMS-8300 unless otherwise noted.

Barricades shall NOT be used as a sign support.

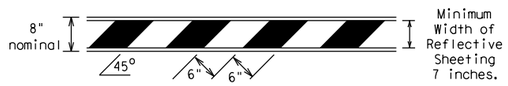

TYPICAL STRIPING DETAIL FOR BARRICADE RAIL

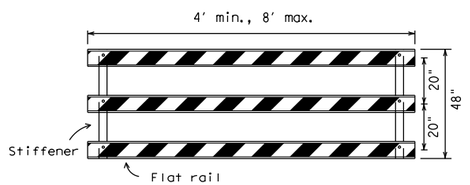

Stiffener may be inside or outside of support, but no more than 2 stiffeners shall be allowed on one barricade.

TYPICAL PANEL DETAIL
FOR SKID OR POST TYPE BARRICADES

Each roadway of a divided highway shall be barricaded in the same manner.

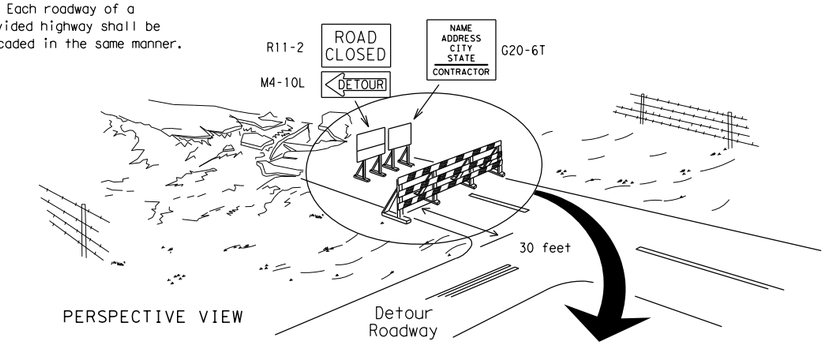

PERSPECTIVE VIEW

The three rails on Type 3 barricades shall be reflectorized orange and reflective white stripes on one side facing one-way traffic and both sides for two-way traffic.
Barricade striping should slant downward in the direction of detour.

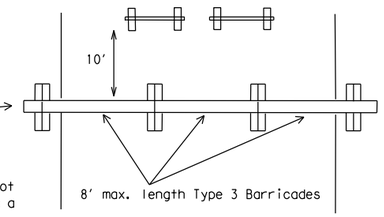

PLAN VIEW

1. Signs should be mounted on independent supports at a 7 foot mounting height in center of roadway. The signs should be a minimum of 10 feet behind Type 3 Barricades.
2. Advance signing shall be as specified elsewhere in the plans.

TYPE 3 BARRICADE (POST AND SKID) TYPICAL APPLICATION

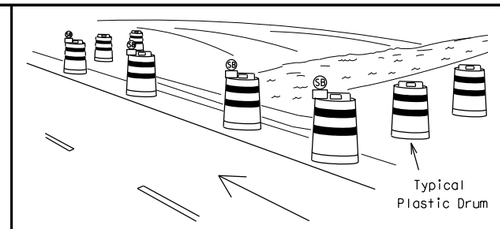

PERSPECTIVE VIEW

1. Where positive redirectional capability is provided, drums may be omitted.
2. Plastic construction fencing may be used with drums for safety as required in the plans.
3. Vertical Panels on flexible support may be substituted for drums when the shoulder width is less than 4 feet.
4. When the shoulder width is greater than 12 feet, steady-burn lights may be omitted if drums are used.
5. Drums must extend the length of the culvert widening.

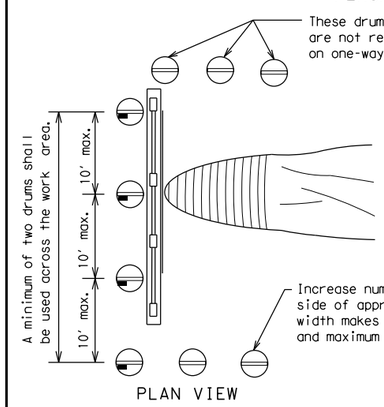

PLAN VIEW

LEGEND	
	Plastic drum
	Plastic drum with steady burn light or yellow warning reflector
SB	Steady burn warning light or yellow warning reflector

CULVERT WIDENING OR OTHER ISOLATED WORK WITHIN THE PROJECT LIMITS

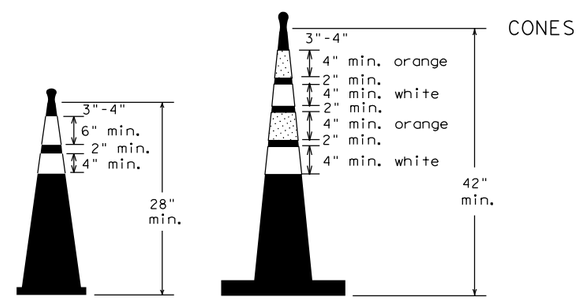

Two-Piece cones

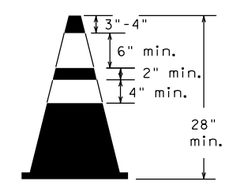

One-Piece cones

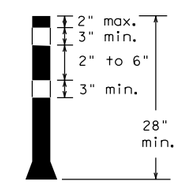

Tubular Marker

28" Cones shall have a minimum weight of 9 1/2 lbs.

42" 2-piece cones shall have a minimum weight of 30 lbs. including base.

1. Traffic cones and tubular markers shall be predominantly orange, and meet the height and weight requirements shown above.
2. One-piece cones have the body and base of the cone molded in one consolidated unit. Two-piece cones have a cone shaped body and a separate rubber base, or ballast, that is added to keep the device upright and in place.
3. Two-piece cones may have a handle or loop extending up to 8" above the minimum height shown, in order to aid in retrieving the device.
4. Cones or tubular markers shall have white or white and orange reflective bands as shown above. The reflective bands shall have a smooth, sealed outer surface and meet the requirements of Departmental Material Specification DMS-8300 Type A or Type B.
5. 28" cones and tubular markers are generally suitable for short duration and short-term stationary work as defined on BC(4). These should not be used for intermediate-term or long-term stationary work unless personnel is on-site to maintain them in their proper upright position.
6. 42" two-piece cones, vertical panels or drums are suitable for all work zone durations.
7. Cones or tubular markers used on each project should be of the same size and shape.

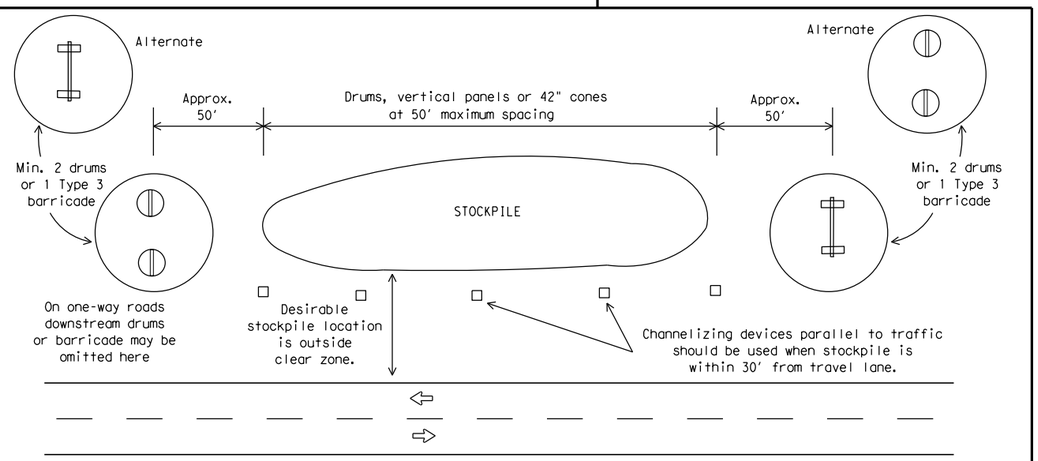

TRAFFIC CONTROL FOR MATERIAL STOCKPILES

Texas Department of Transportation — Traffic Safety Division Standard

BARRICADE AND CONSTRUCTION CHANNELIZING DEVICES

BC(10)-21

FILE: bc-21.dgn	DN: TxDOT	CK: TxDOT	DW: TxDOT	CK: TxDOT
© TxDOT November 2002	CONT	SECT	JOB	HIGHWAY
REVISIONS	3544	04		SH0211
9-07 8-14	DIST		COUNTY	SHEET NO.
7-13 5-21	SAT		BEXAR	37

DATE: 12/6/2022 5:50:18 PM
FILE: P:\89\46\24\Design\Transpo\Standards\bc-21.dgn

DISCLAIMER:
The use of this standard is governed by the "Texas Engineering Practice Act". No warranty of any kind is made by TxDOT for any purpose whatsoever. TxDOT assumes no responsibility for the conversion of this standard to other formats or for incorrect results or damages resulting from its use.

WORK ZONE PAVEMENT MARKINGS

GENERAL

1. The Contractor shall be responsible for maintaining work zone and existing pavement markings, in accordance with the standard specifications and special provisions, on all roadways open to traffic within the CSJ limits unless otherwise stated in the plans.
2. Color, patterns and dimensions shall be in conformance with the "Texas Manual on Uniform Traffic Control Devices" (TMUTCD).
3. Additional supplemental pavement marking details may be found in the plans or specifications.
4. Pavement markings shall be installed in accordance with the TMUTCD and as shown on the plans.
5. When short term markings are required on the plans, short term markings shall conform with the TMUTCD, the plans and details as shown on the Standard Plan Sheet WZ(STPM).
6. When standard pavement markings are not in place and the roadway is opened to traffic, DO NOT PASS signs shall be erected to mark the beginning of the sections where passing is prohibited and PASS WITH CARE signs at the beginning of sections where passing is permitted.
7. All work zone pavement markings shall be installed in accordance with Item 662, "Work Zone Pavement Markings."

RAISED PAVEMENT MARKERS

1. Raised pavement markers are to be placed according to the patterns on BC(12).
2. All raised pavement markers used for work zone markings shall meet the requirements of Item 672, "RAISED PAVEMENT MARKERS" and Departmental Material Specification DMS-4200 or DMS-4300.

PREFABRICATED PAVEMENT MARKINGS

1. Removable prefabricated pavement markings shall meet the requirements of DMS-8241.
2. Non-removable prefabricated pavement markings (foil back) shall meet the requirements of DMS-8240.

MAINTAINING WORK ZONE PAVEMENT MARKINGS

1. The Contractor will be responsible for maintaining work zone pavement markings within the work limits.
2. Work zone pavement markings shall be inspected in accordance with the frequency and reporting requirements of work zone traffic control device inspections as required by Form 599.
3. The markings should provide a visible reference for a minimum distance of 300 feet during normal daylight hours and 160 feet when illuminated by automobile low-beam headlights at night, unless sight distance is restricted by roadway geometrics.
4. Markings failing to meet this criteria within the first 30 days after placement shall be replaced at the expense of the Contractor as per Specification Item 662.

REMOVAL OF PAVEMENT MARKINGS

1. Pavement markings that are no longer applicable, could create confusion or direct a motorist toward or into the closed portion of the roadway shall be removed or obliterated before the roadway is opened to traffic.
2. The above shall not apply to detours in place for less than three days, where flaggers and/or sufficient channelizing devices are used in lieu of markings to outline the detour route.
3. Pavement markings shall be removed to the fullest extent possible, so as not to leave a discernable marking. This shall be by any method approved by TxDOT Specification Item 677 for "Eliminating Existing Pavement Markings and Markers".
4. The removal of pavement markings may require resurfacing or seal coating portions of the roadway as described in Item 677.
5. Subject to the approval of the Engineer, any method that proves to be successful on a particular type pavement may be used.
6. Blast cleaning may be used but will not be required unless specifically shown in the plans.
7. Over-painting of the markings SHALL NOT BE permitted.
8. Removal of raised pavement markers shall be as directed by the Engineer.
9. Removal of existing pavement markings and markers will be paid for directly in accordance with Item 677, "ELIMINATING EXISTING PAVEMENT MARKINGS AND MARKERS," unless otherwise stated in the plans.
10. Black-out marking tape may be used to cover conflicting existing markings for periods less than two weeks when approved by the Engineer.

Temporary Flexible-Reflective Roadway Marker Tabs

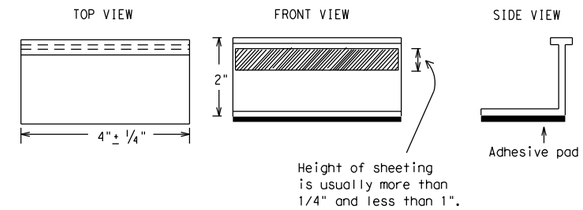

STAPLES OR NAILS SHALL NOT BE USED TO SECURE TEMPORARY FLEXIBLE-REFLECTIVE ROADWAY MARKER TABS TO THE PAVEMENT SURFACE

1. Temporary flexible-reflective roadway marker tabs used as guidemarks shall meet the requirements of DMS-8242.
2. Tabs detailed on this sheet are to be inspected and accepted by the Engineer or designated representative. Sampling and testing is not normally required, however at the option of the Engineer, either "A" or "B" below may be imposed to assure quality before placement on the roadway.
   A. Select five (5) or more tabs at random from each lot or shipment and submit to the Construction Division, Materials and Pavement Section to determine specification compliance.
   B. Select five (5) tabs and perform the following test. Affix five (5) tabs at 24 inch intervals on an asphaltic pavement in a straight line. Using a medium size passenger vehicle or pickup, run over the markers with the front and rear tires at a speed of 35 to 40 miles per hour, four (4) times in each direction. No more than one (1) out of the five (5) reflective surfaces shall be lost or displaced as a result of this test.
3. Small design variances may be noted between tab manufacturers.
4. See Standard Sheet WZ(STPM) for tab placement on new pavements. See Standard Sheet TCP(7-1) for tab placement on seal coat work.

RAISED PAVEMENT MARKERS USED AS GUIDEMARKS

1. Raised pavement markers used as guidemarks shall be from the approved product list, and meet the requirements of DMS-4200.
2. All temporary construction raised pavement markers provided on a project shall be of the same manufacturer.
3. Adhesive for guidemarks shall be bituminous material hot applied or butyl rubber pad for all surfaces, or thermoplastic for concrete surfaces.

Guidemarks shall be designated as:
YELLOW - (two amber reflective surfaces with yellow body).
WHITE - (one silver reflective surface with white body).

DEPARTMENTAL MATERIAL SPECIFICATIONS	
PAVEMENT MARKERS (REFLECTORIZED)	DMS-4200
TRAFFIC BUTTONS	DMS-4300
EPOXY AND ADHESIVES	DMS-6100
BITUMINOUS ADHESIVE FOR PAVEMENT MARKERS	DMS-6130
PERMANENT PREFABRICATED PAVEMENT MARKINGS	DMS-8240
TEMPORARY REMOVABLE, PREFABRICATED PAVEMENT MARKINGS	DMS-8241
TEMPORARY FLEXIBLE, REFLECTIVE ROADWAY MARKER TABS	DMS-8242

A list of prequalified reflective raised pavement markers, non-reflective traffic buttons, roadway marker tabs and other pavement markings can be found at the Material Producer List web address shown on BC(1).

Texas Department of Transportation — Traffic Safety Division Standard

BARRICADE AND CONSTRUCTION PAVEMENT MARKINGS

BC(11)-21

FILE: bc-21.dgn	DN: TxDOT	CK: TxDOT	DW: TxDOT	CK: TxDOT
© TxDOT February 1998	CONT	SECT	JOB	HIGHWAY
REVISIONS 2-98 9-07 5-21	3544	04		SH0211
1-02 7-13	DIST	COUNTY		SHEET NO.
11-02 8-14	SAT	BEXAR		38

DATE: 12/6/2022 5:50:19 PM
FILE: P:\89\46\24\Design\Transpo\Standards\bc-21.dgn

PAVEMENT MARKING PATTERNS

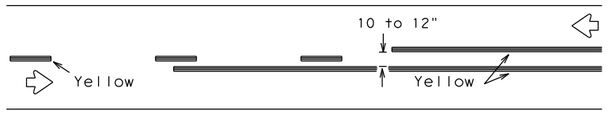

REFLECTORIZED PAVEMENT MARKINGS - PATTERN A

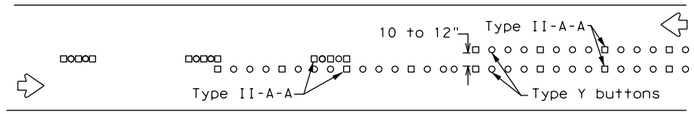

RAISED PAVEMENT MARKERS - PATTERN A

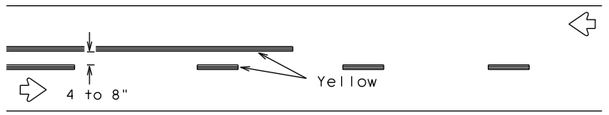

REFLECTORIZED PAVEMENT MARKINGS - PATTERN B

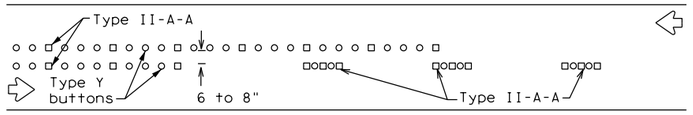

RAISED PAVEMENT MARKERS - PATTERN B

Pattern A is the TXDOT Standard, however Pattern B may be used if approved by the Engineer.
Prefabricated markings may be substituted for reflectorized pavement markings.

CENTER LINE & NO-PASSING ZONE BARRIER LINES FOR TWO-LANE, TWO-WAY HIGHWAYS

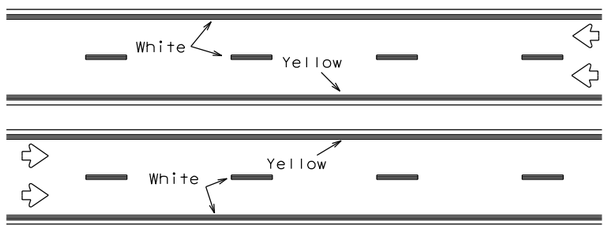

REFLECTORIZED PAVEMENT MARKINGS

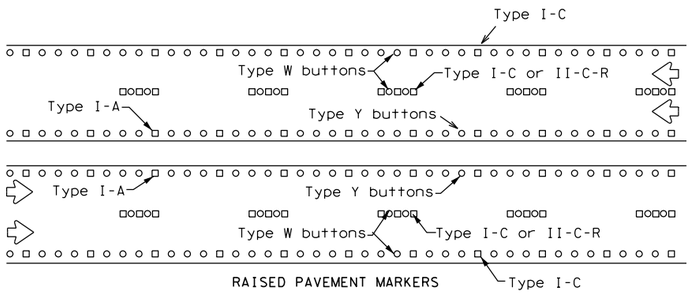

RAISED PAVEMENT MARKERS

Prefabricated markings may be substituted for reflectorized pavement markings.

EDGE & LANE LINES FOR DIVIDED HIGHWAY

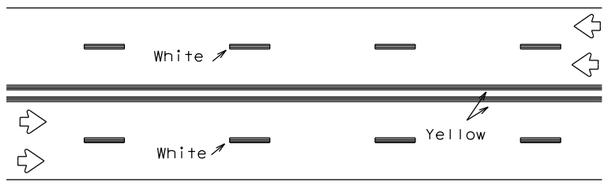

REFLECTORIZED PAVEMENT MARKINGS

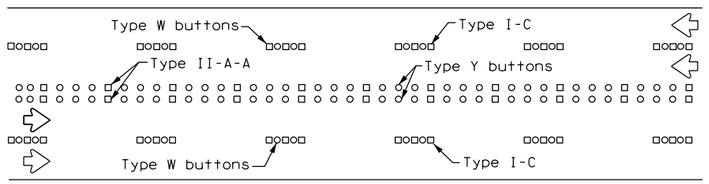

RAISED PAVEMENT MARKERS

Prefabricated markings may be substituted for reflectorized pavement markings.

LANE & CENTER LINES FOR MULTILANE UNDIVIDED HIGHWAYS

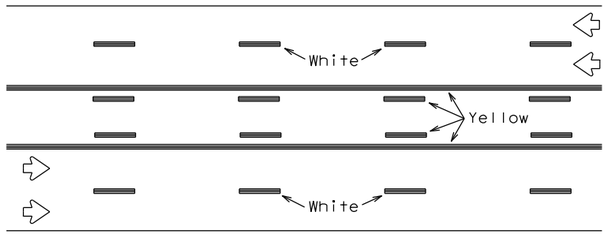

REFLECTORIZED PAVEMENT MARKINGS

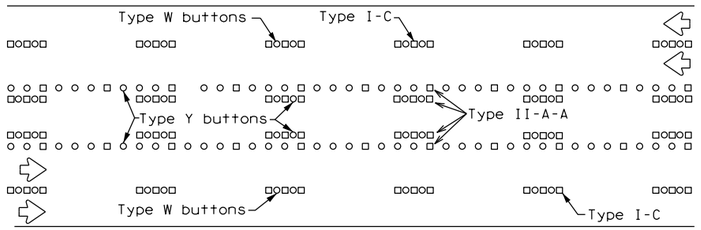

RAISED PAVEMENT MARKERS

Prefabricated markings may be substituted for reflectorized pavement markings.

TWO-WAY LEFT TURN LANE

STANDARD WORK ZONE PAVEMENT MARKINGS DETAILS

SOLID LINES

DOUBLE NO-PASSING LINE

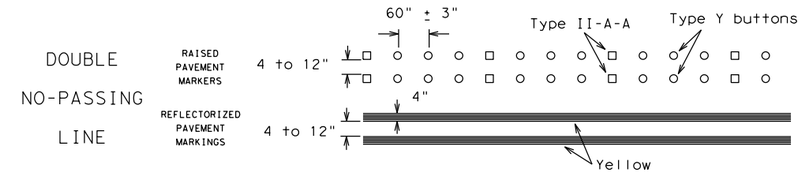

EDGE LINE OR SINGLE NO-PASSING LINE

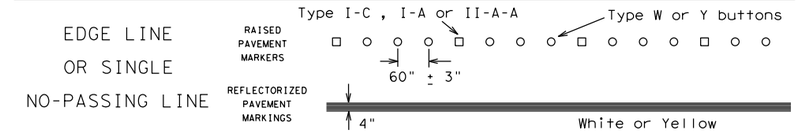

WIDE LINE

(FOR LEFT TURN CHANNELIZING LINE OR CHANNELIZING LINE USED TO DISCOURAGE LANE CHANGING.)

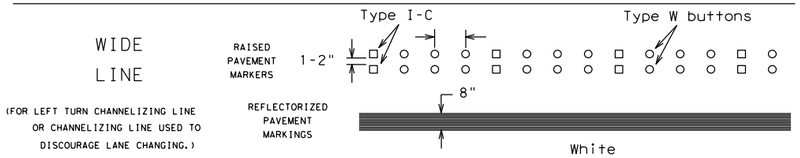

BROKEN LINES

CENTER LINE OR LANE LINE

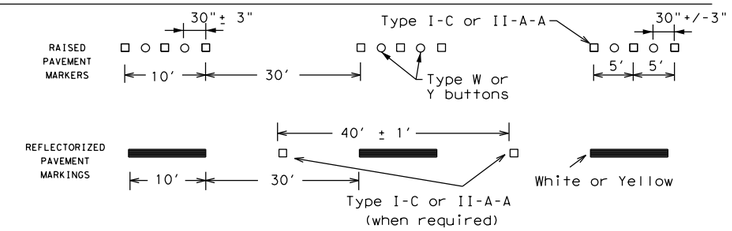

AUXILIARY OR LANEDROP LINE

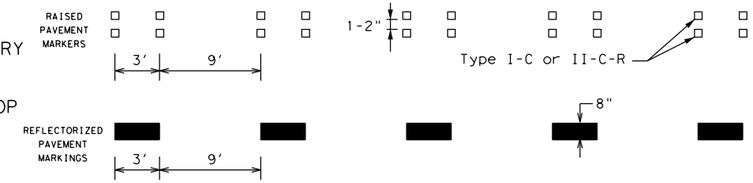

REMOVABLE MARKINGS WITH RAISED PAVEMENT MARKERS

If raised pavement markers are used to supplement REMOVABLE markings, the markers shall be applied to the top of the tape at the approximate mid length of tape used for broken lines or at 20 foot spacing for solid lines. This allows an easier removal of raised pavement markers and tape.

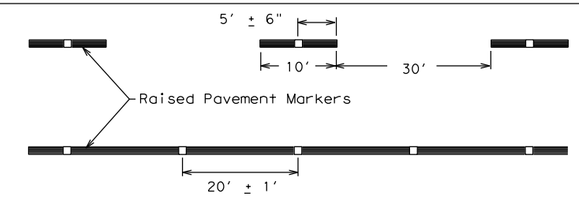

Centerline only - not to be used on edge lines

SHEET 12 OF 12

Raised pavement markers used as standard pavement markings shall be from the approved products list and meet the requirements of Item 672 "RAISED PAVEMENT MARKERS."

Texas Department of Transportation — Traffic Safety Division Standard

BARRICADE AND CONSTRUCTION PAVEMENT MARKING PATTERNS

BC(12)-21

FILE: bc-21.dgn	DN: TxDOT	CK: TxDOT	DW: TxDOT	CK: TxDOT
© TxDOT February 1998	CONT	SECT	JOB	HIGHWAY
REVISIONS 1-97 9-07 5-21 2-98 7-13 11-02 8-14	3544	04		SH0211
	DIST		COUNTY	SHEET NO.
	SAT		BEXAR	39

106

DISCLAIMER:
The use of this standard is governed by the "Texas Engineering Practice Act". No warranty of any kind is made by TxDOT for any purpose whatsoever. TxDOT assumes no responsibility for the conversion of this standard to other formats or for incorrect results or damages resulting from its use.

DATE: 12/6/2022 5:50:19 PM
FILE: P:\89\46\24\Design\Transpo\Standards\bc-21.dgn

DISCLAIMER:
The use of this standard is governed by the "Texas Engineering Practice Act". No warranty of any kind is made by TxDOT for any purpose whatsoever. TxDOT assumes no responsibility for the conversion of this standard to other formats or for incorrect results or damages resulting from its use.

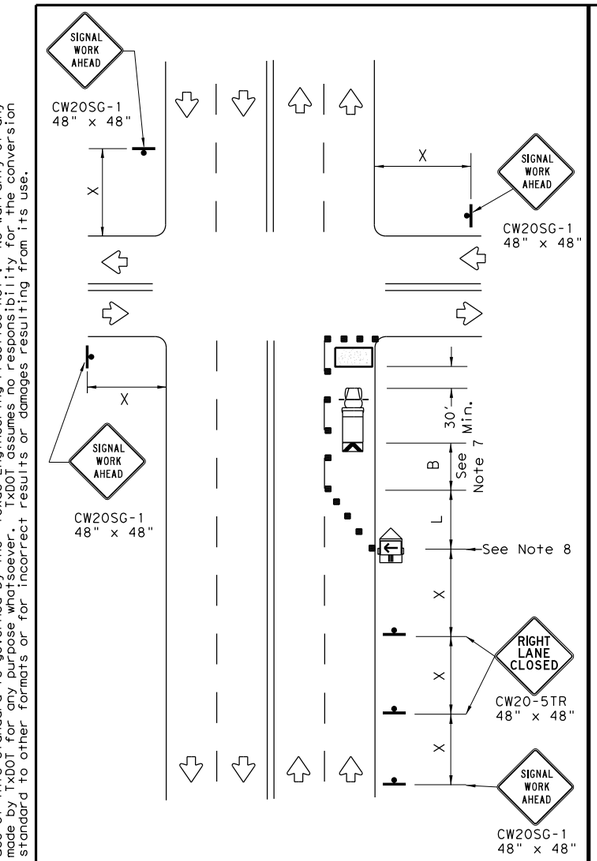

NEAR SIDE LANE CLOSURE

SHORT DURATION OR SHORT TERM STATIONARY

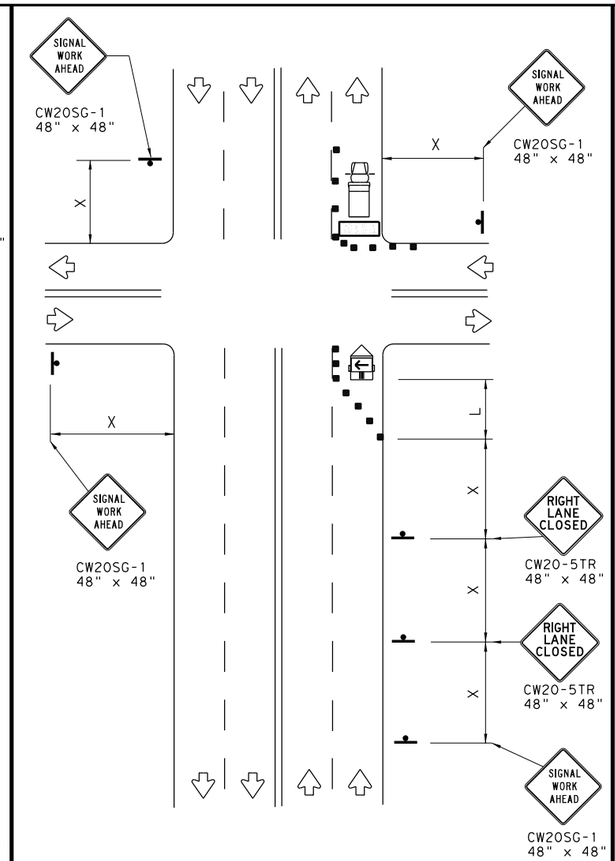

FAR SIDE RIGHT LANE CLOSURE

SHORT DURATION OR SHORT TERM STATIONARY

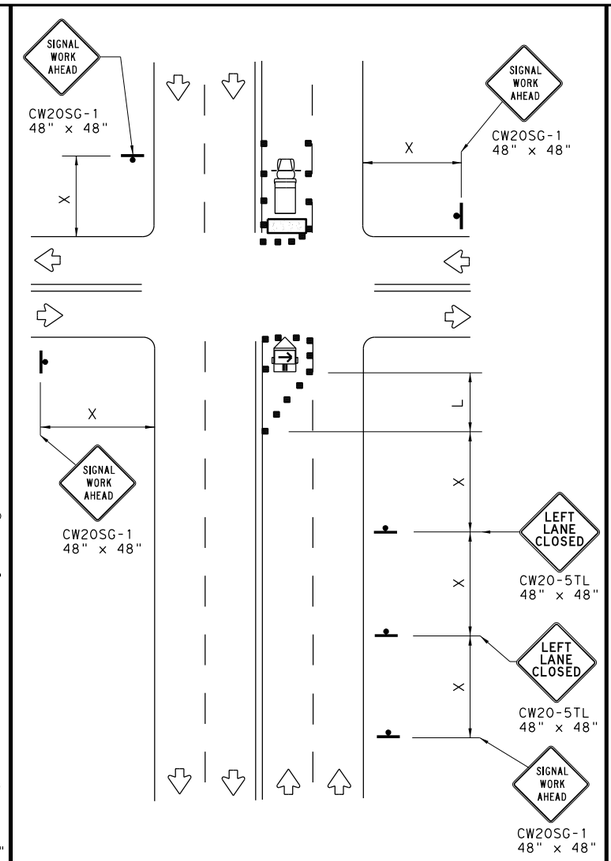

FAR SIDE LEFT LANE CLOSURE

SHORT DURATION OR SHORT TERM STATIONARY

LEGEND			
	Type 3 Barricade		Channelizing Devices
	Heavy Work Vehicle		Truck Mounted Attenuator (TMA)
	Trailer Mounted Flashing Arrow Board		Portable Changeable Message Sign (PCMS)
	Sign		Traffic Flow
	Flag		Flagger

Posted Speed *	Formula	Minimum Desirable Taper Lengths **			Suggested Maximum Spacing of Channelizing Devices		Minimum Sign Spacing "X" Distance	Suggested Longitudinal Buffer Space "B"
		10' Offset	11' Offset	12' Offset	On a Taper	On a Tangent		
30	$L = \frac{WS^2}{60}$	150'	165'	180'	30'	60'	120'	90'
35		205'	225'	245'	35'	70'	160'	120'
40		265'	295'	320'	40'	80'	240'	155'
45	L = WS	450'	495'	540'	45'	90'	320'	195'
50		500'	550'	600'	50'	100'	400'	240'
55		550'	605'	660'	55'	110'	500'	295'
60		600'	660'	720'	60'	120'	600'	350'
65		650'	715'	780'	65'	130'	700'	410'
70		700'	770'	840'	70'	140'	800'	475'
75		750'	825'	900'	75'	150'	900'	540'

* Conventional Roads Only
** Taper lengths have been rounded off.
L=Length of Taper(FT) W=Width of Offset(FT) S=Posted Speed(MPH)

WORKERS IN BUCKET TRUCKS SHALL NOT WORK ABOVE OPEN LANES OF TRAFFIC.

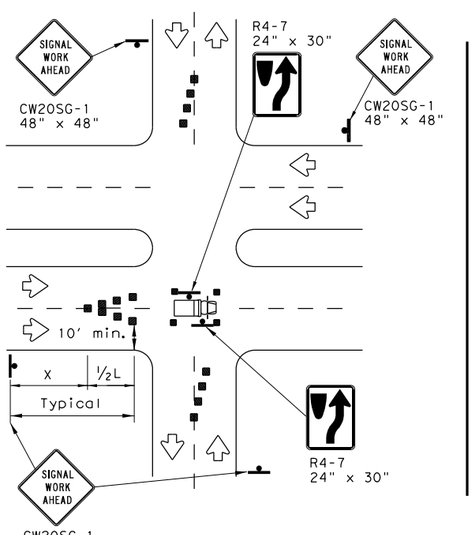

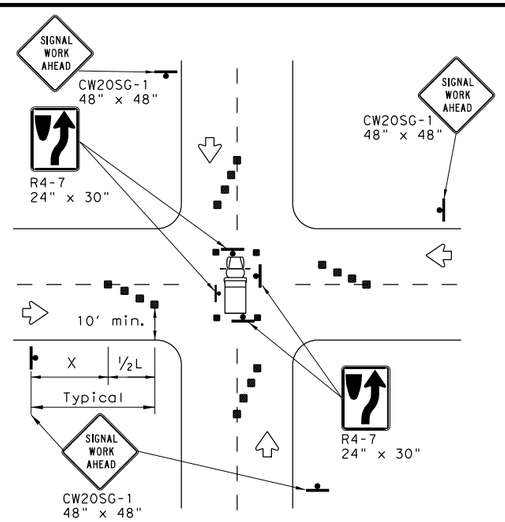

OPERATIONS IN THE INTERSECTION

SHORT DURATION

GENERAL NOTES

1. The minimum size channelizing device is the 28" cone. 42" Two-piece cones, drums, vertical panels or barricades will be required when the device must be left unattended at night.
2. Obstructions or hazards at the work area shall be clearly marked and delineated at all times.
3. Flaggers and Flagger Symbol (CW20-7) signs may be required according to field conditions.
4. Vehicles parked in roadway shall be equipped with at least two high intensity rotating, flashing, oscillating or strobe type lights.
5. High level warning devices (flag trees) may be used at corners of the vehicle.
6. When work operations are performed on existing signals, the signals may be placed in flashing red mode when approved by the engineer. If existing signals do not have power, All-Way Stop (R1-1 and R1-3P) signs may be implemented when approved by the engineer.
7. For Short-Term Stationary work the buffer space "B" from the above table should be used if field conditions permit. For Short Duration (less than 1 hour) any buffer space provided will enhance the safety of the setup.
8. The arrow board at this location may be omitted for Short Duration work if the work vehicle has an arrow board in operation. As an option, the arrow board may be placed at the end of the taper in the closed lane if space is not available at the beginning of the taper.
9. Signs and devices for the NEAR SIDE LANE CLOSURE may be altered for a left lane closure by using a LEFT LANE CLOSED (CW20-5TL) and adding channelizing devices on the centerline to protect the work space from opposing traffic.

SHEET 1 OF 2

Texas Department of Transportation — Traffic Operations Division Standard

TRAFFIC SIGNAL WORK TYPICAL DETAILS

WZ(BTS-1)-13

FILE: wzbts-13.dgn	DN: TxDOT	CK: TxDOT	DW: TxDOT	CK: TxDOT
© TxDOT April 1992	CONT	SECT	JOB	HIGHWAY
REVISIONS	3544	04		SH0211
2-98 10-99 7-13	DIST		COUNTY	SHEET NO.
4-98 3-03	SAT		BEXAR	40

114

DATE: 12/6/2022 5:50:20 PM
FILE: P:\89\46\24\Design\Transpo\Standards\wzbts-13.dgn

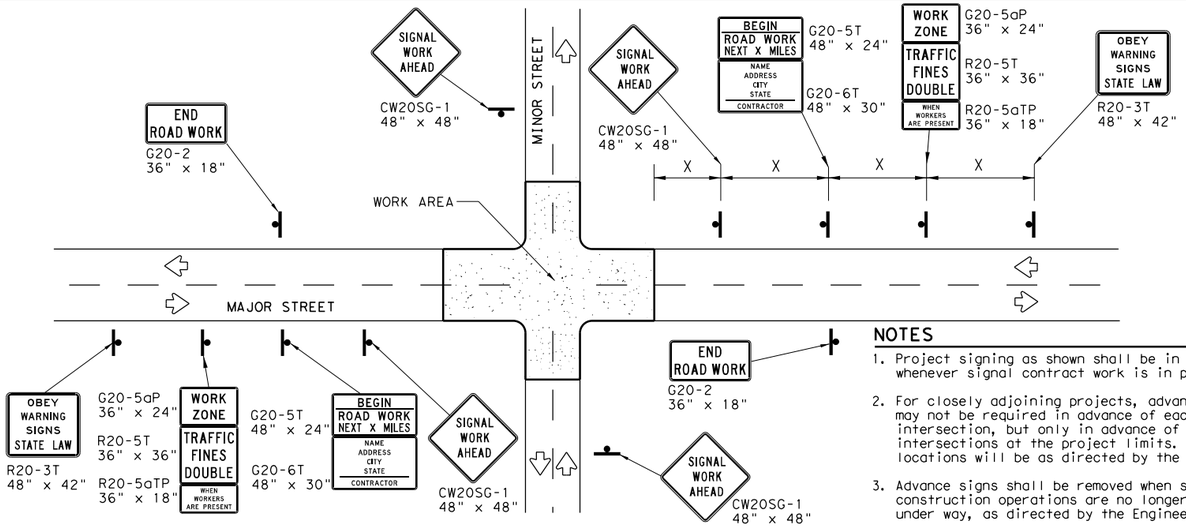

TYPICAL ADVANCE SIGNAL PROJECT SIGNING

FOR LONG TERM and INTERMEDIATE-TERM STATIONARY WORK OPERATIONS

NOTES

1. Project signing as shown shall be in place whenever signal contract work is in progress.
2. For closely adjoining projects, advance signing may not be required in advance of each intersection, but only in advance of the intersections at the project limits. Actual locations will be as directed by the Engineer.
3. Advance signs shall be removed when signal construction operations are no longer under way, as directed by the Engineer.
4. Warning sign spacing shown is typical for both directions.
5. See the Table on sheet 1 of 2 for Typical warning sign spacing.

GENERAL NOTES FOR WORK ZONE SIGNS

1. Signs shall be installed and maintained in a straight and plumb condition.
2. Wooden sign posts shall be painted white.
3. Barricades shall NOT be used as sign supports.
4. Nails shall NOT be used to attach signs to any support.
5. All signs shall be installed in accordance with the plans or as directed by the Engineer.
6. The Contractor shall furnish the sign design shown in the plans or in the "Standard Highway Sign Designs for Texas" (SHSD).
7. The Contractor shall furnish sign supports and substrates listed in the "Compliant Work Zone Traffic Control Device List" (CWZTCD), installed as per the manufacturer's recommendations.
8. Temporary signs that have damaged or cracked substrates and/or damaged or marred reflective sheeting shall be replaced as directed by the Engineer.
9. Identification markings may be shown only on the back of the sign substrate. The maximum height of letters and/or company logos used for identification shall be 1".
10. Damaged wood posts shall be replaced. Splicing wood posts will not be allowed.

DURATION OF WORK

1. Work zone durations are defined in Part 6, Section 6G.02 of the Texas Manual on Uniform Traffic Control Devices (TMUTCD).

SIGN MOUNTING HEIGHT

1. Sign height of Long-term/Intermediate-term warning signs shall be as shown on Figure 6F-1 of the TMUTCD.
2. Sign height of Short-term/Short Duration warning signs shall be as shown on Figure 6F-2 of the TMUTCD.
3. Regulatory signs shall be mounted at least 7 feet, but not more than 9 feet, above the paved surface regardless of work duration.

REMOVING OR COVERING

1. When sign messages may be confusing or do not apply, the signs shall be removed or completely covered, unless otherwise approved by the Engineer.
2. When signs are covered, the material used shall be opaque, such as heavy mil black plastic, or other materials which will cover the entire sign face and maintain their opaque properties under automobile headlights at night without damaging the sign sheeting. Burlap, or heavy materials such as plywood or aluminum shall not be used to cover signs.
3. Duct tape or other adhesive material shall NOT be affixed to a sign face.
4. Signs and anchor stubs shall be removed and holes back filled upon completion of the work.

REFLECTIVE SHEETING

1. All signs shall be retroreflective and constructed of sheeting meeting the requirements of the DMS and color usage table shown on this sheet.

SIGN SUPPORT WEIGHTS

1. Weights used to keep signs from turning over should be sandbags filled with dry, cohesionless material.
2. The sandbags will be tied shut to keep the sand from spilling and to maintain a constant weight.
3. Rock, concrete, iron, steel or other solid objects will not be permitted for use as sign support weights.
4. Sandbags should weigh a minimum of 35 lbs and a maximum of 50 lbs.
5. Sandbags shall be made of a durable material that tears upon vehicular impact. Rubber, such as tire inner tubes, shall not be used.
6. Rubber ballasts designed for channelizing devices should not be used for ballast on portable sign supports. Sign supports designed and manufactured with rubber bases may be used when shown on the CWZTCD list.
7. Sandbags shall only be placed along or laid over the base supports of the traffic control device and shall not be suspended above ground level or hung with rope, wire, chains or other fastners. Sandbags shall be placed along the length of the skids to weigh down the sign support.
8. Sandbags shall NOT be placed under the skid and shall not be used to level sign supports placed on slopes.

LEGEND	
	Sign
	Channelizing Devices
	Type 3 Barricade

DEPARTMENTAL MATERIAL SPECIFICATIONS	
SIGN FACE MATERIALS	DMS-8300
FLEXIBLE ROLL-UP REFLECTIVE SIGNS	DMS-8310

COLOR	USAGE	SHEETING MATERIAL
ORANGE	BACKGROUND	TYPE B_{FL} OR TYPE C_{FL} SHEETING
WHITE	BACKGROUND	TYPE A SHEETING
BLACK	LEGEND & BORDERS	ACRYLIC NON-REFLECTIVE SHEETING

Only pre-qualified products shall be used. A copy of the "Compliant Work Zone Traffic Control Devices List" (CWZTCD) describes pre-qualified products and their sources and may be found at the following web address:

http://www.txdot.gov/txdot_library/publications/construction.htm

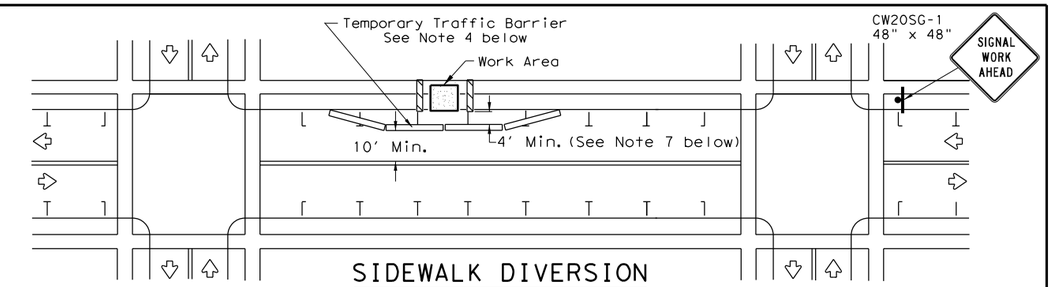

SIDEWALK DIVERSION

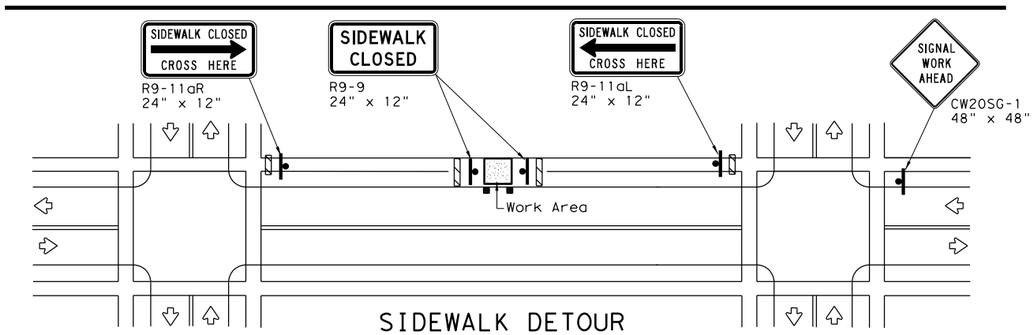

SIDEWALK DETOUR

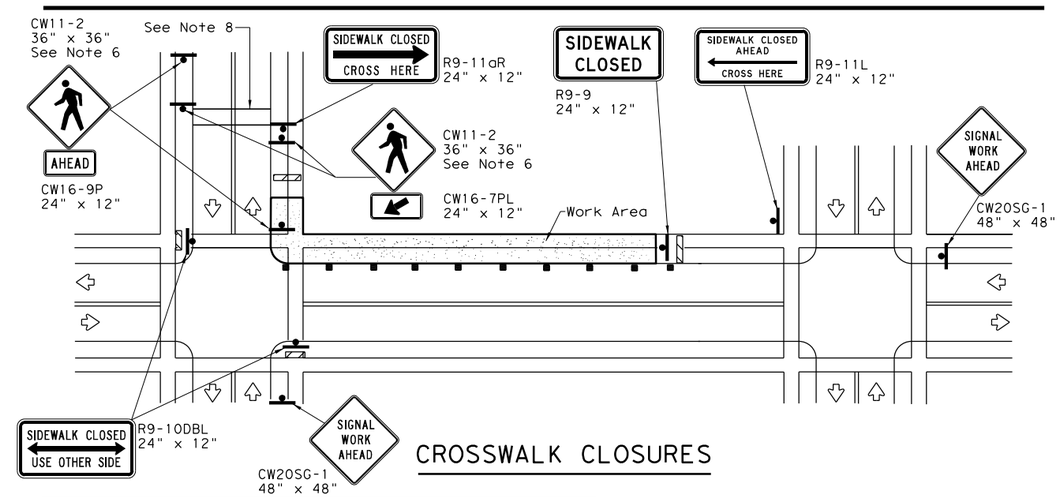

CROSSWALK CLOSURES

PEDESTRIAN CONTROL

1. Holes, trenches or other hazards shall be adequately protected by covering, delineating or surrounding the hazard with orange plastic pedestrian fencing or longitudinal channelizing devices, or as directed by the Engineer.
2. "CROSSWALK CLOSURES" as detailed above will require the Engineer's approval prior to installation.
3. R9 series signs shown may be placed on supports detailed on the BC standards or CWZTCD list, or when fabricated from approved lightweight plastic substrates, they may be mounted on top of a plastic drum at or near the location shown.
4. For speeds less than 45 mph longitudinal channelizing devices may be used instead of traffic barriers when approved by the Engineer. Attenuation of blunt ends and installation of water filled devices shall be as per BC(9) and manufacturer's recommendations.
5. Location of devices are for general guidance. Actual device spacing and location must be field adjusted to meet actual conditions.
6. Where pedestrians with visual disabilities normally use the closed sidewalk Detectable Pedestrian Barricades should be used instead of the Type 3 Barricades shown.
7. The width of existing sidewalk should be maintained if practical.
8. Pavement markings for mid-block crosswalks shall be paid for under the appropriate bid items.
9. When crosswalks or other pedestrian facilities are closed or relocated, temporary facilities shall be detectable and shall include accessibility features consistent with the features present in the existing pedestrian facility.

Texas Department of Transportation — Traffic Operations Division Standard

TRAFFIC SIGNAL WORK BARRICADES AND SIGNS

WZ(BTS-2)-13

FILE: wzbts-13.dgn	DN: TxDOT	CK: TxDOT	DW: TxDOT	CK: TxDOT
©TxDOT April 1992	CONT	SECT	JOB	HIGHWAY
REVISIONS	3544	04		SH0211
2-98 10-99 7-13	DIST		COUNTY	SHEET NO.
4-98 3-03	SAT		BEXAR	41

DISCLAIMER:
The use of this standard is governed by the "Texas Engineering Practice Act". No warranty of any kind is made by TxDOT for any purpose whatsoever. TxDOT assumes no responsibility for the conversion of this standard to other formats or for incorrect results or damages resulting from its use.

DATE: 12/6/2022 5:50:21 PM
FILE: P:\89\46\24\Design\Transpo\Standards\wzbts-13.dgn

STORMWATER POLLUTION PRVENTION PLAN (SWP3):

This SWP3 has been developed in accordance with TxDOT policy for projects disturbing less than 1 acre of soil, and not part of a larger common plan of development.

For all projects with any soil disturbing activities, TxDOT will maintain a SWP3 with all pertinent records, correspondence, environmental documents, etc. at the project field office. If no field office is available, then this SWP3 shall be kept at the appropriate TxDOT Area Office.

This SWP3 is consistent with requirements specified in applicable stormwater plans, and the project's environmental permits, issues, and commitments (EPICs).

1.0 SITE/PROJECT DESCRIPTION

1.1 PROJECT CONTROL SECTION JOB (CSJ):
3544-04-

1.2 PROJECT LIMITS:
From: SH 211 AT LAMBDA DR

To:

1.3 PROJECT COORDINATES:
BEGIN: (Lat)_____,(Long)_____

END: (Lat)_____,(Long)_____

1.4 TOTAL PROJECT AREA (Acres): 0.1

1.5 TOTAL AREA TO BE DISTURBED (Acres): 0.0

1.6 NATURE OF CONSTRUCTION ACTIVITY:
TRAFFIC SIGNAL MODIFICATION (NO DIGGING)

1.7 MAJOR SOIL TYPES:

Soil Type	Description

1.8 PROJECT SPECIFIC LOCATIONS (PSLs):
PSLs must be depicted on the Environmental Layout Sheets in Attachment 1.2 of this SWP3. PSLs may be identified during preconstruction meetings or during the construction process. Please choose from the options below:

- ☐ PSLs determined during preconstruction meeting
- ☐ PSLs determined during construction
- ☐ No PSLs planned for construction

Type	Sheet #s

All off-ROW PSLs required by the Contractor are the Contractor's responsibility. The Contractor shall secure all permits required by local, state, federal laws for off-ROW PSLs. The contractor shall provide diagrams, areas of disturbance, acreage, and BMPs for all off-ROW PSLs within one mile of the project.

1.9 CONSTRUCTION ACTIVITIES:
(Use the following list as a starting point when developing the Construction Activity Schedule and Ceasing Record in Attachment 2.3.)

- ☐ Mobilization
- ☐ Install sediment and erosion controls
- ☐ Blade existing topsoil into windrows, prep ROW, clear and grub
- ☐ Remove existing pavement
- ☐ Grading operations, excavation, and embankment
- ☐ Excavate and prepare subgrade for proposed pavement widening
- ☐ Remove existing culverts, safety end treatments (SETs)
- ☐ Remove existing metal beam guard fence (MBGF), bridge rail
- ☐ Install proposed pavement per plans
- ☐ Install culverts, culvert extensions, SETs
- ☐ Install mow strip, MBGF, bridge rail
- ☐ Place flex base
- ☐ Rework slopes, grade ditches
- ☐ Blade windrowed material back across slopes
- ☐ Revegetation of unpaved areas
- ☐ Achieve site stabilization and remove sediment and erosion control measures
- ☐ Other: _____
- ☐ Other: _____
- ☐ Other: _____

1.10 POTENTIAL POLLUTANTS AND SOURCES:

- ☐ Sediment laden stormwater from stormwater conveyance over disturbed area
- ☐ Fuels, oils, and lubricants from construction vehicles, equipment, and storage
- ☐ Solvents, paints, adhesives, etc. from various construction activities
- ☐ Transported soils from offsite vehicle tracking
- ☐ Construction debris and waste from various construction activities
- ☐ Contaminated water from excavation or dewatering pump-out water
- ☐ Sanitary waste from onsite restroom facilities
- ☐ Trash from various construction activities/receptacles
- ☐ Long-term stockpiles of material and waste
- ☐ Other: _____
- ☐ Other: _____
- ☐ Other: _____

1.11 RECEIVING WATERS:
Receiving waters must be depicted on the Environmental Layout Sheets in Attachment 1.2 of this SWP3. Include Segment # for receiving waters.

Tributaries	Classified Waterbody

* Add (*) for impaired waterbodies with pollutant in ().

1.12 ROLES AND RESPONSIBILITIES: TxDOT

- ☐ Development of plans and specifications
- X Perform SWP3 inspections
- ☐ Maintain SWP3 records and update to reflect daily operations
- ☐ Other: _____
- ☐ Other: _____

1.13 ROLES AND RESPONSIBILITIES: CONTRACTOR

- X Day To Day Operational Control
- X Maintain schedule of major construction activities
- X Install, maintain and modify BMPs
- ☐ Other: _____
- ☐ Other: _____

STORMWATER POLLUTION PREVENTION PLAN (SWP3) (Less Than 1 Acre)

© 2022

Sheet 1 of 2

Texas Department of Transportation

FED. RD. DIV. NO.	PROJECT NO.		SHEET NO.
6			42
STATE	STATE DIST.	COUNTY	
TEXAS	SAT	BEXAR	
CONT.	SECT.	JOB	HIGHWAY NO.
3544	04		SH0211

DATE: 12/6/2022
FILE: P:\89\46\24\Design\Transpo\Standards\swp3a22.dgn

STORMWATER POLLUTION PRVENTION PLAN (SWP3):

2.0 BEST MANAGEMENT PRACTICES (BMPs) AND CONTROLS, INSPECTION, AND MAINTENANCE

The Contractor shall be the responsible party for implementing the BMPs described herein and for complying with the SWP3 for control of erosion and sedimentation during day-to-day operations. The Contractor shall implement changes to this SWP3 approved by TxDOT within the times specified in this SWP3 or the CGP.

2.1 EROSION CONTROL AND SOIL STABILIZATION BMPs:

T / P

X ☐ Protection of Existing Vegetation
☐ ☐ Vegetated Buffer Zones
☐ ☐ Soil Retention Blankets
☐ ☐ Geotextiles
☐ ☐ Mulching/ Hydromulching
☐ ☐ Soil Surface Treatments
☐ ☐ Temporary Seeding
☐ ☐ Permanent Planting, Sodding or Seeding
☐ ☐ Biodegradable Erosion Control Logs
☐ ☐ Rock Filter Dams/ Rock Check Dams
☐ ☐ Vertical Tracking
☐ ☐ Interceptor Swale
☐ ☐ Riprap
☐ ☐ Diversion Dike
☐ ☐ Temporary Pipe Slope Drain
☐ ☐ Embankment for Erosion Control
☐ ☐ Paved Flumes
☐ ☐ Other: _____
☐ ☐ Other: _____
☐ ☐ Other: _____
☐ ☐ Other: _____

2.2 SEDIMENT CONTROL BMPs:

T / P

X ☐ Biodegradable Erosion Control Logs
☐ ☐ Dewatering Controls
☐ ☐ Inlet Protection
☐ ☐ Rock Filter Dams/ Rock Check Dams
☐ ☐ Sandbag Berms
☐ ☐ Sediment Control Fence
☐ ☐ Stabilized Construction Exit
☐ ☐ Floating Turbidity Barrier
☐ ☐ Vegetated Buffer Zones
☐ ☐ Vegetated Filter Strips
☐ ☐ Other: _____
☐ ☐ Other: _____
☐ ☐ Other: _____
☐ ☐ Other: _____

Refer to the Environmental Layout Sheets/ SWP3 Layout Sheets located in Attachment 1.2 of this SWP3

2.3 PERMANENT CONTROLS:

(Coordinate post-construction BMPs with appropriate TxDOT maintenance sections.)

BMPs To Be Left In Place Post Construction:

Type	Stationing	
	From	To

Refer to the Environmental Layout Sheets/ SWP3 Layout Sheets located in Attachment 1.2 of this SWP3

2.4 OFFSITE VEHICLE TRACKING CONTROLS:

☐ Excess dirt/mud on road removed daily
☐ Haul roads dampened for dust control
☐ Loaded haul trucks to be covered with tarpaulin
☐ Stabilized construction exit
☐ Other: _____
☐ Other: _____
☐ Other: _____
☐ Other: _____

2.5 POLLUTION PREVENTION MEASURES:

☐ Chemical Management
☐ Concrete and Materials Waste Management
☐ Debris and Trash Management
☐ Dust Control
☐ Sanitary Facilities
☐ Other: _____
☐ Other: _____
☐ Other: _____
☐ Other: _____

2.6 VEGETATED BUFFER ZONES:

Natural vegetated buffers shall be maintained as feasible to protect adjacent surface waters. If vegetated natural buffer zones are not feasible due to site geometry, the appropriate additional sediment control measures have been incorporated into this SWP3.

Type	Stationing	
	From	To

Refer to the Environmental Layout Sheets/ SWP3 Layout Sheets located in Attachment 1.2 of this SWP3

2.7 ALLOWABLE NON-STORMWATER DISCHARGES:

X Fire hydrant flushings
X Irrigation drainage
X Pavement washwater (where spills or leaks have not occurred, and detergents are not used)
X Potable water sources
X Springs
X Uncontaminated groundwater
X Water used to wash vehicles or control dust
X Other allowable non-stormwater discharges as allowed by TPDES GP TXR150000.

2.8 INSPECTIONS:

All disturbed areas and erosion and sediment control devices shall be inspected at least once every seven (7) days. Inspections shall be performed by TxDOT as indicated on the Field Inspection and Maintenance Report Form 2118 and retained in Attachment 2.3 of this SWP3 .

2.9 MAINTENANCE:

Control measures shall be properly installed according to specifications. If it is determined that a BMP or control measure is not operating effectively, maintenance must be accomplished as soon as possible and before the next anticipated rain event, but in no case later than 7 calendar days after being able to access the site. Maintenance shall be performed by the Contractor as indicated on the Field Inspection and Maintenance Report Form 2118 and retained in Attachment 2.3 of this SWP3.

STORMWATER POLLUTION PREVENTION PLAN (SWP3) (Less Than 1 Acre)

© 2022

Sheet 2 of 2

Texas Department of Transportation

FED. RD. DIV. NO.	PROJECT NO.		SHEET NO.
6			43
STATE	STATE DIST.	COUNTY	
TEXAS	SAT	BEXAR	
CONT.	SECT.	JOB	HIGHWAY NO.
3544	04		SH0211

DATE: 12/6/2022
FILE: P:\89\46\24\Design\Transpo\Standards\swp3a22.dgn

DISCLAIMER:
The use of this standard is governed by the "Texas Engineering Practice Act". No warranty of any kind is made by TxDOT for any purpose whatsoever. TxDOT assumes no responsibility for the conversion of this standard to other formats or for incorrect results or damages resulting from its use.

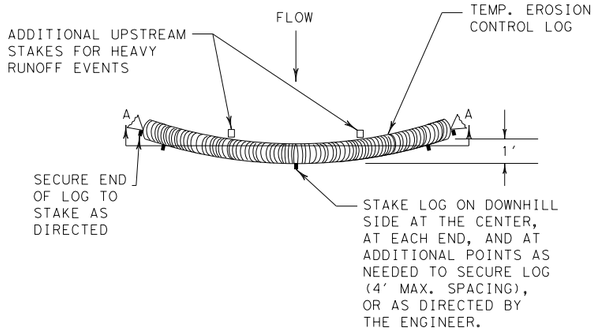

PLAN VIEW

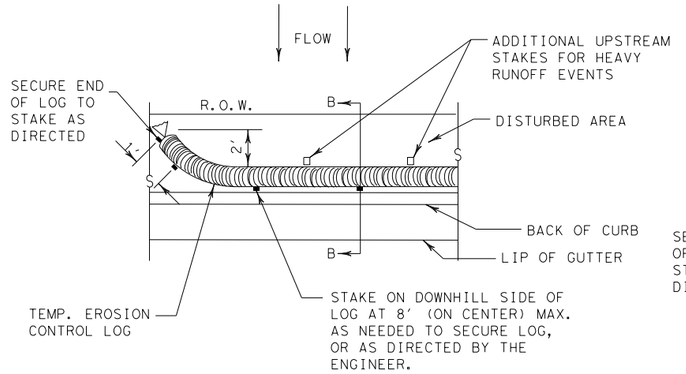

PLAN VIEW

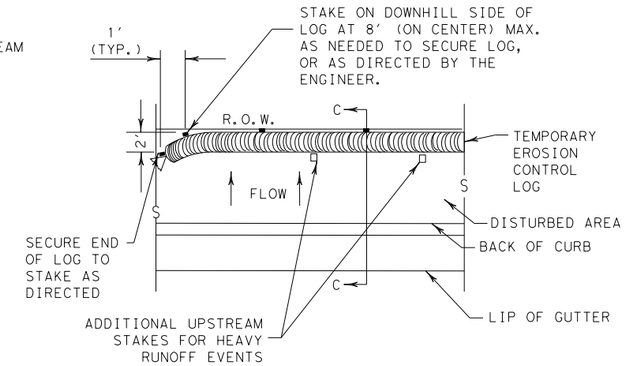

PLAN VIEW

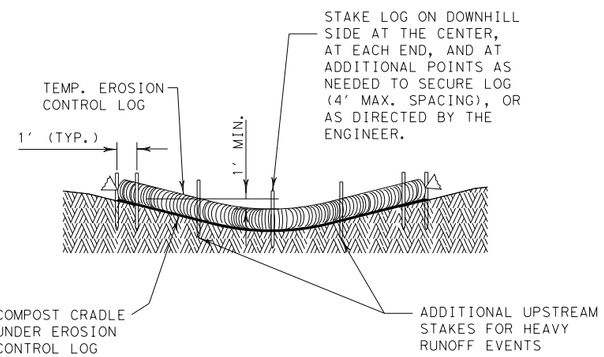

SECTION A-A

EROSION CONTROL LOG DAM

CL-D

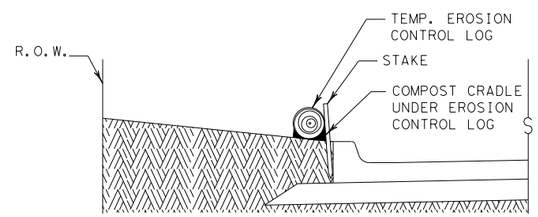

SECTION B-B

EROSION CONTROL LOG AT BACK OF CURB

CL-BOC

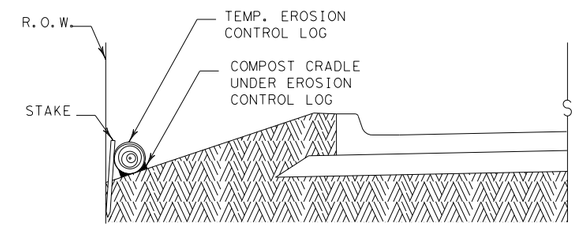

SECTION C-C

EROSION CONTROL LOG AT EDGE OF RIGHT-OF-WAY

CL-ROW

GENERAL NOTES:

1. EROSION CONTROL LOGS SHALL BE INSTALLED IN ACCORDANCE WITH MANFACTURER'S RECOMMENDATIONS, OR AS DIRECTED BY THE ENGINEER.
2. LENGTHS OF EROSION CONTROL LOGS SHALL BE IN ACCORDANCE WITH MANUFACTURER'S RECOMMENDATIONS AND AS REQUIRED FOR THE PURPOSE INTENDED.
3. UNLESS OTHERWISE DIRECTED, USE BIODEGRADABLE OR PHOTODEGRADABLE CONTAINMENT MESH ONLY WHERE LOG WILL REMAIN IN PLACE AS PART OF A VEGETATIVE SYSTEM. FOR TEMPORARY INSTALLATIONS, USE RECYCLABLE CONTAINMENT MESH.
4. FILL LOGS WITH SUFFICIENT FILTER MATERIAL TO ACHIEVE THE MINIMUM COMPACTED DIAMETER SPECIFIED IN THE PLANS WITHOUT EXCESSIVE DEFORMATION.
5. STAKES SHALL BE 2" X 2" WOOD OR #3 REBAR, 2'-4' LONG, EMBEDDED SUCH THAT 2" PROTRUDES ABOVE LOG, OR AS DIRECTED BY THE ENGINEER.
6. DO NOT PLACE STAKES THROUGH CONTAINMENT MESH.
7. COMPOST CRADLE MATERIAL IS INCIDENTAL & WILL NOT BE PAID FOR SEPARATELY.
8. SANDBAGS USED AS ANCHORS SHALL BE PLACED ON TOP OF LOGS & SHALL BE OF SUFFICIENT SIZE TO HOLD LOGS IN PLACE.
9. TURN THE ENDS OF EACH ROW OF LOGS UPSLOPE TO PREVENT RUNOFF FROM FLOWING AROUND THE LOG.
10. FOR HEAVY RUNOFF EVENTS, ADDITIONAL UPSTREAM STAKES MAY BE NECESSARY TO KEEP LOG FROM FOLDING IN ON ITSELF.

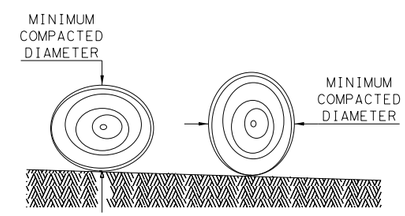

DIAMETER MEASUREMENTS OF EROSION CONTROL LOGS SPECIFIED IN PLANS

LEGEND

- CL-D — EROSION CONTROL LOG DAM
- CL-BOC — EROSION CONTROL LOG AT BACK OF CURB
- CL-ROW — EROSION CONTROL LOG AT EDGE OF RIGHT-OF-WAY
- CL-SST — EROSION CONTROL LOGS ON SLOPES STAKE AND TRENCHING ANCHORING
- CL-SSL — EROSION CONTROL LOGS ON SLOPES STAKE AND LASHING ANCHORING
- CL-DI — EROSION CONTROL LOG AT DROP INLET
- CL-CI — EROSION CONTROL LOG AT CURB INLET
- CL-GI — EROSION CONTROL LOG AT CURB & GRATE INLET

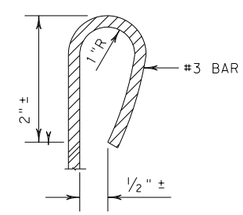

REBAR STAKE DETAIL

SEDIMENT BASIN & TRAP USAGE GUIDELINES

An erosion control log sediment trap may be used to filter sediment out of runoff draining from an unstabilized area.

Log Traps: The drainage area for a sediment trap should not exceed 5 acres. The trap capacity should be 1800 CF/Acre (0.5" over the drainage area).

Control logs should be placed in the following locations:

1. Within drainage ditches spaced as needed or min. 500' on center
2. Immediately preceding ditch inlets or drain inlets
3. Just before the drainage enters a water course
4. Just before the drainage leaves the right of way
5. Just before the drainage leaves the construction limits where drainage flows away from the project.

The logs should be cleaned when the sediment has accumulated to a depth of 1/2 the log diameter.

Cleaning and removal of accumulated sediment deposits is incidental and will not be paid for separately.

Texas Department of Transportation — Design Division Standard

TEMPORARY EROSION, SEDIMENT AND WATER POLLUTION CONTROL MEASURES

EROSION CONTROL LOG

EC(9)-16

FILE: ec916	DN: TxDOT	CK: KM	DW: LS/PT	CK: LS	
© TxDOT: JULY 2016	CONT	SECT	JOB	HIGHWAY	
REVISIONS	3544	04		SH0211	
	DIST		COUNTY		SHEET NO.
	SAT		BEXAR		44

DATE: 12/6/2022
FILE: P:\89\46\24\Design\Transpo\Standards\ec916.dgn

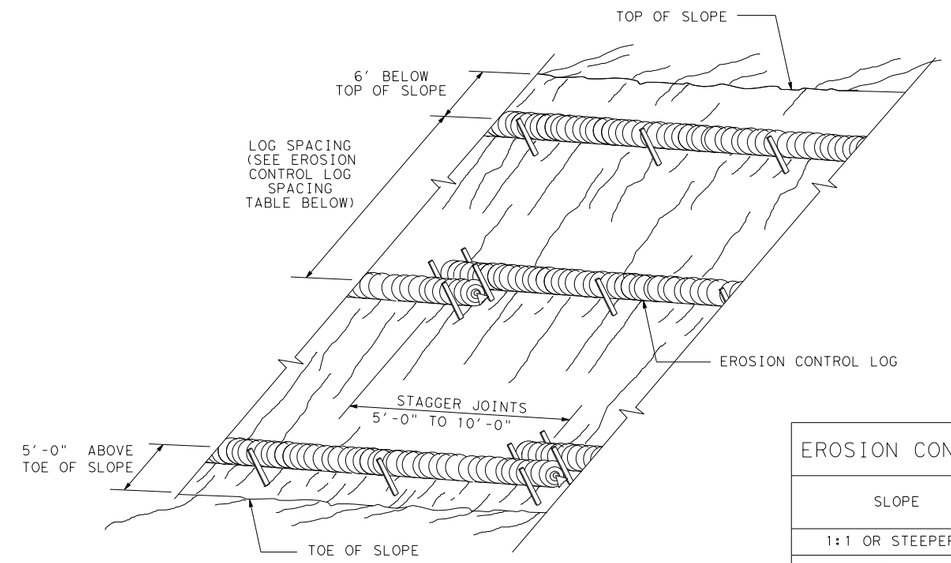

EROSION CONTROL LOGS ON SLOPES
STAKE AND TRENCHING ANCHORING

CL-SST

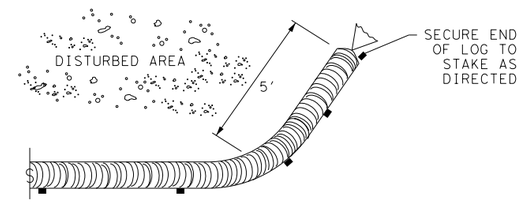

END SECTION RAP DETAIL

EROSION CONTROL LOG SPACING TABLE				
SLOPE	LOG DIAMETER			
	6"	8"	12"	18"
1:1 OR STEEPER	5′	10′	15′	20′
2:1	10′	20′	30′	40′
3:1	15′	30′	45′	60′
4:1 OR FLATTER	20′	40′	60′	80′

* ADJUSTMENTS CAN BE MADE FOR SOIL TYPE:
SOFT, LOAMY SOILS-ADJUST ROWS CLOSER TOGETHER;
HARD, ROCKY SOILS- ADJUST ROWS FARTHER APART

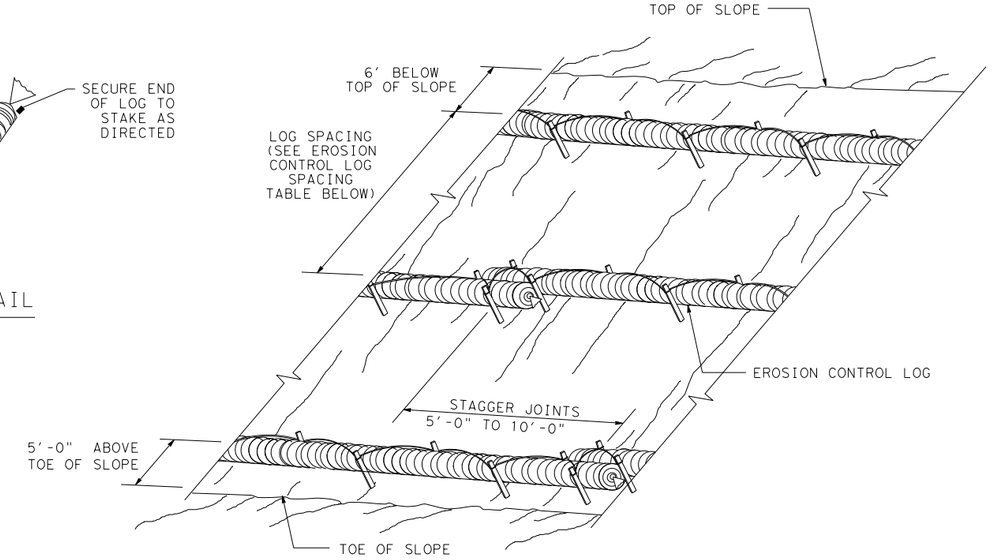

EROSION CONTROL LOGS ON SLOPES
STAKE AND LASHING ANCHORING

CL-SSL

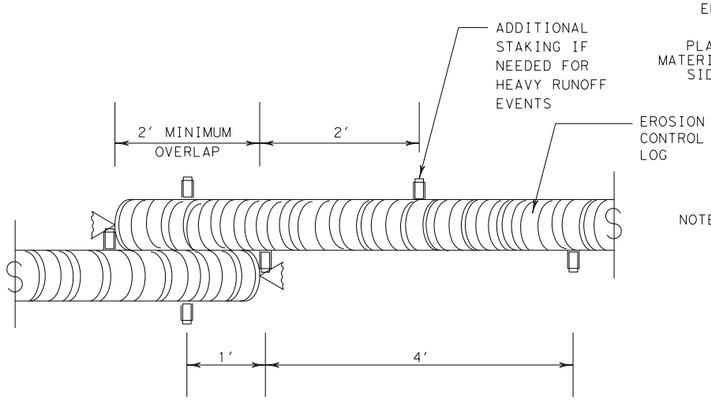

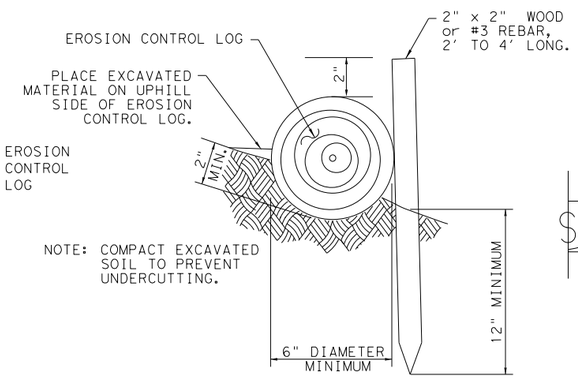

STAKE AND TRENCHING ANCHORING DETAIL

CL-SST

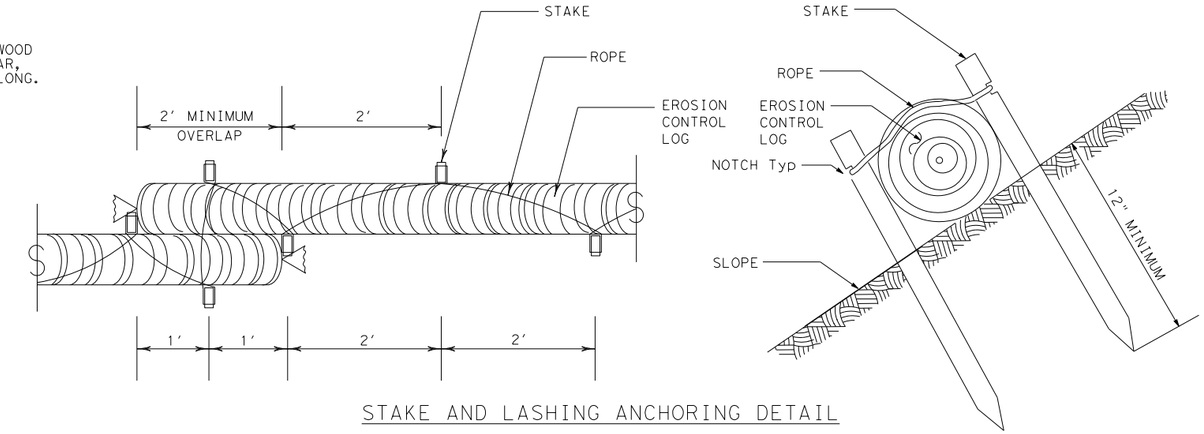

STAKE AND LASHING ANCHORING DETAIL

CL-SSL

TRENCH DEPTH TABLE	
LOG DIAMETER	DEPTH
6"	2"
8"	3"
12"	4"
18"	5"

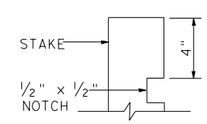

STAKE NOTCH DETAIL

SHEET 2 OF 3

Texas Department of Transportation — Design Division Standard

TEMPORARY EROSION, SEDIMENT AND WATER POLLUTION CONTROL MEASURES

EROSION CONTROL LOG

EC(9)-16

FILE: ec116	DN: TxDOT	CK: KM	DW: LS/PT	CK: LS
© TxDOT: JULY 2016	CONT	SECT	JOB	HIGHWAY
REVISIONS	3544	04		SH0211
	DIST	COUNTY		SHEET NO.
	SAT	BEXAR		45

DISCLAIMER:
The use of this standard is governed by the "Texas Engineering Practice Act". No warranty of any kind is made by TxDOT for any purpose whatsoever. TxDOT assumes no responsibility for the conversion of this standard to other formats or for incorrect results or damages resulting from its use.

DATE: 12/6/2022
FILE: P:\89\46\24\Design\Transpo\Standards\ec916.dgn

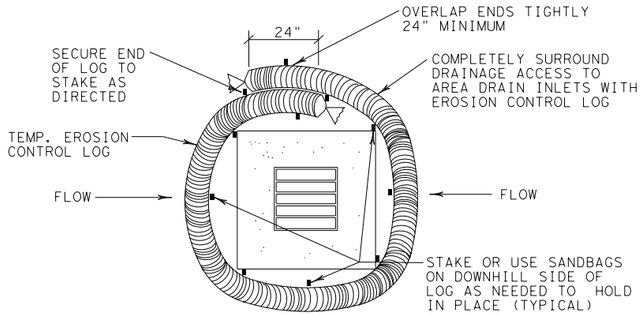

EROSION CONTROL LOG AT DROP INLET

CL-DI

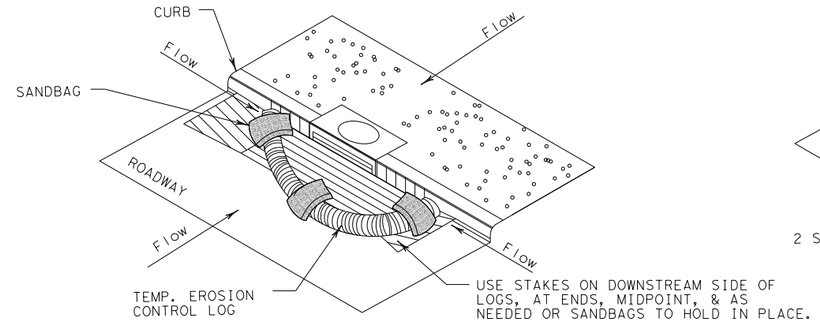

EROSION CONTROL LOG AT CURB INLET

CL-CI

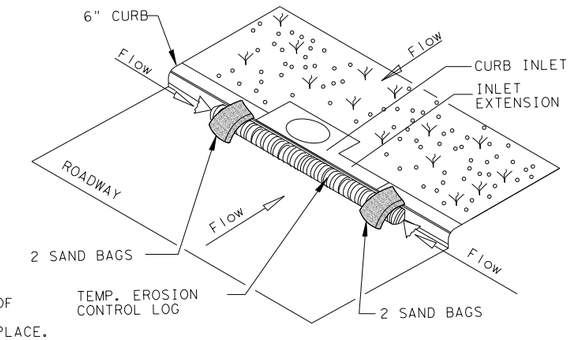

EROSION CONTROL LOG AT CURB INLET

CL-CI

NOTE:
EROSION CONTROL LOGS USED AT CURB INLETS SHOULD ONLY BE USED IF THEY WILL NOT IMPEDE TRAFFIC OR FLOOD THE ROADWAY OR WHEN THE STORM SEWER SYSTEM IS NOT FULLY FUNCTIONAL.

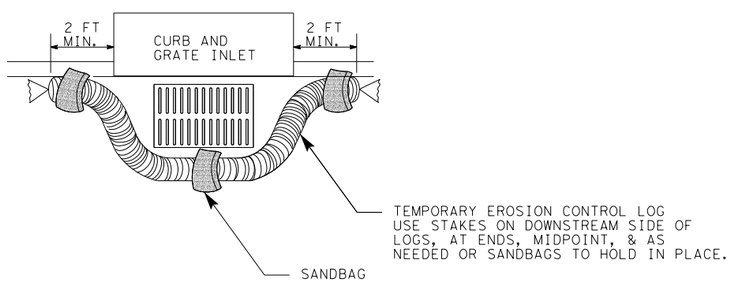

EROSION CONTROL LOG AT CURB & GRADE INLET

CL-GI

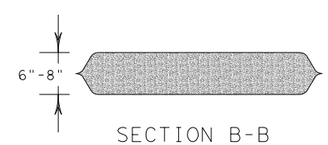

SECTION B-B

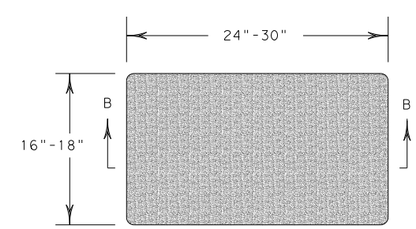

SANDBAG DETAIL

SHEET 3 OF 3

Texas Department of Transportation

Design Division Standard

TEMPORARY EROSION, SEDIMENT AND WATER POLLUTION CONTROL MEASURES

EROSION CONTROL LOG

EC(9)-16

FILE: ec916	DN: TxDOT	CK: KM	DW: LS/PT	CK: LS
© TxDOT: JULY 2016	CONT	SECT	JOB	HIGHWAY
REVISIONS	3544	04		SH0211
	DIST		COUNTY	SHEET NO.
	SAT		BEXAR	46

DISCLAIMER:
The use of this standard is governed by the "Texas Engineering Practice Act". No warranty of any kind is made by TxDOT for any purpose whatsoever. TxDOT assumes no responsibility for the conversion of this standard to other formats or for incorrect results or damages resulting from its use.

DATE: 12/6/2022
FILE: P:\89\46\24\Design\Transpo\Standards\ec916.dgn